APPENDIX C3
Exploratory Borehole Results

This page intentionally left blank

Monterey Peninsula Water Supply Project
Hydrogeologic Investigation

Technical Memorandum (TM1)
Summary of Results - Exploratory Boreholes

PREPARED FOR:

California American Water

RBF Consulting

July 8, 2014

GEOSCIENCE Support Services, Inc., **Ground Water Resources Development**
P.O. Box 220, Claremont, CA 91711 | P (909) 451-6650 | F (909) 451-6638 | www.gssiwater.com

GEOSCIENCE

THIS REPORT IS RENDERED TO CALIFORNIA AMERICAN WATER AND RBF CONSULTING AS OF THE DATE HEREOF, SOLELY FOR THEIR BENEFIT IN CONNECTION WITH ITS STATED PURPOSE AND MAY NOT BE RELIED ON BY ANY OTHER PERSON OR ENTITY OR BY THEM IN ANY OTHER CONTEXT. ALL CALCULATIONS WERE PERFORMED USING ACCEPTED PROFESSIONAL STANDARDS.

AS DATA IS UPDATED FROM TIME TO TIME, ANY RELIANCE ON THIS REPORT AT A FUTURE DATE SHOULD TAKE INTO ACCOUNT UPDATED DATA.

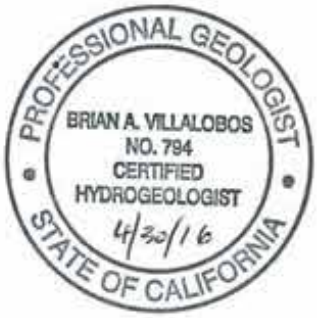

Brian Villalobos, CEG, CHG
Senior Geohydrologist
CHG No. 794

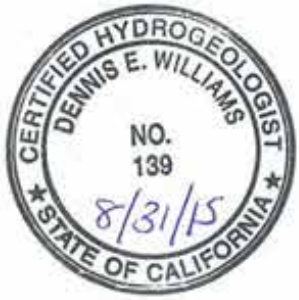

Dennis E. Williams, Ph.D., CHG
President
CHG No. 139

In Cooperation with the Monterey Peninsula Water Supply Project Hydrogeology Working Group:

Mr. Tim Durbin
Mr. Martin Feeney, CEG, CHG
Mr. Peter Leffler, CHG
Dr. Dennis Williams, CHG

Copyright © 2014 GEOSCIENCE Support Services, Inc.

GEOSCIENCE retains its copyrights, and the client for which this document was produced may not use such products of consulting services for purposes unrelated to the subject matter of this project. No portion of this report may be reproduced, stored in a retrieval system, or transmitted in any form or by any means, mechanical, electronic, photocopying, recording or otherwise EXCEPT for purposes of the project for which this document was produced.

CALIFORNIA AMERICAN WATER / RBF CONSULTING
MONTEREY PENINSULA WATER SUPPLY PROJECT HYDROGEOLOGIC INVESTIGATION
TECHNICAL MEMORANDUM (TM 1)
SUMMARY OF RESULTS - EXPLORATORY BOREHOLES

CONTENTS

1.0 EXECUTIVE SUMMARY 1

1.1 Introduction 1

1.2 Findings 2

1.2.1 General 2

1.2.2 CEMEX Area 2

1.2.3 Moss Landing Area 4

1.2.4 Refinement of NMGWM and Development of Focused CEMEX Model 6

2.0 INTRODUCTION 8

2.1 Background 8

2.2 Extracting Seawater from Subsea Aquifers for Feedwater Supply 8

2.3 Subsurface Intakes 9

2.4 Formation of Hydrogeology Working Group and Formation of the Hydrogeologic Investigation Workplan 10

2.5 Project Documents 10

2.5.1 Hydrogeologic Investigation Workplan 10

2.5.2 Hydrogeologic Investigation Report 11

2.6 Purpose and Scope 12

2.6.1 Purpose 12

2.6.2 Scope 12

2.6.3 Added Scope 13

3.0 FIELD INVESTIGATION 14

3.1 Borehole Drilling and Sampling 14

3.1.1 Drilling 14

3.1.2 Core Sampling 15
3.1.3 California-Modified Split-Spoon Sampling 15
3.1.4 Mechanical Grading Analysis 16
3.1.5 Geophysical Borehole Logging 16
3.1.6 Isolated Aquifer Zone Testing for Water Quality Sample Collection 17
3.1.7 Borehole Destruction 20
3.2 Estimates of Hydraulic Conductivity 20
3.2.1 Mechanical Grading Analysis 20
3.2.2 Summary of Hydraulic Conductivity Values 22
3.2.3 Laboratory Permeameter Estimates 25

4.0 GEOHYDROLOGIC SETTING 26

4.1 Historical Background 26
4.2 Groundwater Subbasins 27
4.2.1 "Pressure" Subarea and 180/400-Foot Aquifer 27
4.2.2 Seaside and Corral de Tierra Subbasins 27
4.4 Regional Geologic Setting 28
4.4.1 Aromas Sand (Qar, Qae, and Qaf) 29
4.4.2 Quaternary Marine Terrace Deposits (Qmt) 29
4.4.3 Quaternary Terrace Deposits (Qt) 29
4.4.4 Older Dune Sand (Qod) 30
4.4.5 Older Alluvium (Qo) 30
4.4.6 Younger Dune Deposits (Qd) 31
4.4.7 Quaternary Basin Fill (Qb) Alluvium (Q) and Floodplain Deposits (Qfl) 31
4.5 Local Geology 31
4.5.1 CEMEX Area 31
4.5.1.1 Findings from CEMEX Boreholes 32
4.5.2 Moss Landing Area 32
4.5.2.1 Findings from Moss Landing Boreholes 33
4.6 Hydrostratigraphy 34

4.6.1 900-Foot Aquifer 36
4.6.2 400-Foot Aquifer 36
4.6.3 180-Foot Aquifer 36
4.6.3.1 Historical Approaches for Identifying the 180-Foot Aquifer 37
4.6.4 180-Foot Equivalent Aquifer (Terrace Deposits) 38
4.6.5 Salinas Valley Aquitard 39
4.6.6 Dune Sand Aquifer 39
4.6.7 Perched "A" Aquifer 39
4.7 Hydrostratigraphic Interpretation of CEMEX Borehole Data 39
4.8 Hydrostratigraphic Interpretation of Moss Landing Boreholes Data 40
4.9 Updated Conceptual Model 42

5.0 GROUNDWATER QUALITY 44

5.1 General 44
5.1.1 Groundwater Levels 44
5.1.2 Groundwater Sampling and Analysis 44
5.2 Groundwater Quality - CEMEX Area 47
5.3 Groundwater Quality - Moss Landing Area 49
5.4 Determining Average Central California Coast Seawater Quality 50
5.5 Borehole Water Quality Results 51
5.6 Distinguishing Water Quality from Upper and Lower Aquifers 52
5.7 Evaluation of Source Waters 53
5.7.1 CEMEX Boreholes 53
5.7.2 Moss Landing Boreholes 54
5.7.2.1 Moss Landing Harbor Area 54
5.7.2.2 Molera and Potrero Road Parking Lots, Salinas River State Beach 55
5.7.3 Results of δ^2H and $\delta^{18}O$ Analysis 56
5.8 Results of Tritium Analysis 58
5.8.1 Background: Tritium Source and Interpretation 58
5.8.2 Tritium Results CX-B1WQ and CX-B2WQ 59

6.0 NORTH MARINA AND CEMEX GROUNDWATER MODELS 62

6.1 Aquifer Characteristics 62

6.2 Model Layer Boundaries 63

6.3 Hydraulic conductivity 65

6.3.1 Vertical Hydraulic Conductivity 65

7.0 FINDINGS 68

7.1 General 68

7.2 CEMEX Area 68

7.3 Moss Landing Hydrogeologic Conditions 70

7.4 Groundwater Models 71

8.0 REFERENCES 72

FIGURES, TABLES, and APPENDICES

FIGURES

No.	Description
Stand Alone Figures-Attached	
1	General Project Location
2	General Location of Moss Landing, Potrero Rd., and CEMEX Areas
3	Proposed CEMEX Area Boreholes
4	Moss Landing Harbor Area Boreholes
5	DWR 1946 and 2012 Groundwater Subbasin Boundaries
6a	Geologic Setting
6b	Geologic Map Legend
7a	Geologic Cross-Section 1-1’
7b	CEMEX Area Portion of Geologic Cross-Section 1-1’
8	Geologic Cross-Section 2-2’
9	Geologic Cross-Section 3-3’
10	Trilinear Diagram – CEMEX Isolated Aquifer Zone Tests
11	Trilinear Diagram – Moss Landing Isolated Aquifer Zone Tests
12	CEMEX Area Water Quality Plot – TDS versus Chloride
13	CEMEX Area Water Quality Plot – Sodium versus Chloride
14	CEMEX Area Water Quality Plot – Calcium versus Chloride
15	CEMEX Area Water Quality Plot – ΔSodium versus ΔCalcium
16	CEMEX Area Water Quality Plot – Total Boron versus Chloride
17	CEMEX Area Water Quality Plot – Strontium versus Chloride
18	CEMEX Area Water Quality Plot – Sulfate versus Chloride
19	Moss Landing Area Water Quality Plot – TDS versus Chloride

FIGURES (continued)

No.	Description
Stand Alone Figures-Attached	
20	Moss Landing Area Water Quality Plot – Sodium versus Chloride
21	Moss Landing Area Water Quality Plot – Calcium versus Chloride
22	Moss Landing Area Water Quality Plot – ΔSodium versus ΔCalcium
23	Moss Landing Area Water Quality Plot – Total Boron versus Chloride
24	Moss Landing Area Water Quality Plot – Strontium versus Chloride
25	Moss Landing Area Water Quality Plot – Sulfate versus Chloride
26	CX-B1WQ Plot of $\delta^{2}H$ (‰) versus $\delta^{18}O$ (‰)
27	Moss Landing Area Plot of $\delta^{2}H$ (‰) versus $\delta^{18}O$ (‰)
28	Ground Water Model Boundaries
29	Well and Cross-Section Locations
30	Hydrogeologic Cross-Section A-A’
31	Hydrogeologic Cross-Section B-B’
32	Hydrogeologic Cross-Section C-C’
33	Hydrogeologic Cross-Section D-D’
34	Hydrogeologic Cross-Section E-E’
35	Hydrogeologic Cross-Section F-F’
36	Hydrogeologic Cross-Section G-G’
37	Thickness of Dune Sand, Perched “A”, and Deltaic Deposit Aquifers (Model Layer 2)
38	Thickness of Salinas Valley Aquitard (Model Layer 3)
39	Thickness of 180-Foot and 180-Foot Equivalent Aquifers (Model Layer 4)

FIGURES (continued)

No.	Description
Stand Alone Figures-Attached	
40	Thickness of 180/400-Foot Aquitard (Model Layer 5)
41	Thickness of 400-Foot Aquifer (Model Layer 6)
42	Thickness of 400/900-Foot Aquitard (Model Layer 7)
43	Thickness of 900-Foot Aquifer (Model Layer 8)
44	Sediment Texture versus Horizontal and Vertical Hydraulic Conductivity Values – Dune Sand Aquifer near CEMEX Site
45	Sediment Texture versus Horizontal and Vertical Hydraulic Conductivity Values – 180-Foot Equivalent Aquifer near CEMEX Site
46	Sediment Texture versus Horizontal and Vertical Hydraulic Conductivity Values – Dune Sand/Perched “A” Aquifer near Moss Landing Site
47	Sediment Texture versus Horizontal and Vertical Hydraulic Conductivity Values – Dune Sand/ Perched “A” Aquifer near Potrero Road Site

FIGURES (continued)

No.	Description	Page No.
Inset Figures		
1-1	Hydrostratigraphic Model – Moss Landing to CEMEX Area	6
4-1	Reproduced from Figure IV-2 of Tinsley, 1975	34
4-2	Hydrostratigraphic Model-Moss Landing to CEMEX Area	43
5-1	Tritium Concentration vs. Sample Elevation – CX-B1WQ and CX-B2WQ	59

TABLES

No.	Description
Stand Alone Tables-Attached	
1	Summary of Hydraulic Conductivity Calculations
2	Summary of Vertical and Horizontal Permeability Tests
3a	Summary of Isolated Aquifer Zone Testing Field and Laboratory Water Quality Results – Moss Landing Area
3b	Summary of Isolated Aquifer Zone Testing Field and Laboratory Water Quality Results – CEMEX-Marina, CA
4	Hydraulic Conductivity for Geologic Units at CEMEX
5	Hydraulic Conductivity for Geologic Units at Moss Landing
6	CEMEX Area – Maximum K-Values
7	CEMEX Area – Minimum K-Values
8	Moss Landing Maximum K - Values
9	Moss Landing Minimum K - Values

TABLES (continued)

No.	Description	Page No.
Inset Tables		
1-1	Correlation of Geologic and Hydrostratigraphic with SVIGSM, NMGWM, and CM Model Layers	7
3-1	Chronology of Field Investigation	14
3-2	Isolated Aquifer Zone Depth Intervals	18
3-3	Field Groundwater Quality Parameters	19
3-4	Parameter Stabilization Criteria	19
3-5	Summary of Average Hydraulic Conductivity Estimates by Soil Type	23
3-6	Range of Hydraulic Conductivity from Mechanical Grading Analysis (MGA)	24
3-7	Hydraulic Conductivity for Geologic Units at CEMEX	24
3-8	Hydraulic Conductivity for Geologic Units at Moss Landing	25
3-9	Summary of Laboratory Hydraulic Conductivity Results by Soil Type	25
4-1	Depths of Geologic Units in CEMEX Borings (ft bgs)	32
4-2	Correlation of Geologic and Hydrostratigraphic Units	35
4-3	Previous Estimates of Thickness and Elevation Ranges for the 180-Foot Aquifer	36
4-4	Summary of Laboratory Water Quality Results from Boreholes at CEMEX	40
4-5	Summary of Laboratory Water Quality Results from the Moss Landing Borings	42
5-1	Depth to Water from Isolated Aquifer Test Zones	43
5-2	Water Quality Analyses for Exploratory Boreholes	44
5-3	Summary of Water Quality by Hydrostratigraphic Unit-CEMEX	47
5-4	Summary of Water Quality by Hydrostratigraphic Unit- Moss Landing	49

TABLES (continued)

No.	Description	Page No.
Inset Tables		
5-5	Standard Seawater and Central California Coast Seawater	50
5-6	Comparison of Measured TDS and Calculated TDS for Borehole Water Quality Samples	51
5-7	Results of Oxygen and Hydrogen Isotope Analyses	56
5-8	Results of Tritium Analyses – CX-B1 WQ and CX-B2WQ	58
6-1	Correlation of Geologic and Hydrostratigraphic with SVIGSM, NMGWM, CM Model Layers	63

APPENDICES

Ltr.	Description
A1	Borehole Lithologic Logs
A2	Well Logs Used for Cross-Sections
B	Photographs of Core and Chip Trays
C	Soil Physical Properties Data Reports
D	Mechanical Grading Analyses – Formation Materials
E	Geophysical Borehole Logs
F	Isolated Aquifer Zones Construction Forms and Well Sampling Data Forms
G	Groundwater Quality Laboratory Reports

CALIFORNIA AMERICAN WATER / RBF CONSULTING
MONTEREY PENINSULA WATER SUPPLY PROJECT HYDROGEOLOGIC INVESTIGATION
TECHNICAL MEMORANDUM (TM 1)
SUMMARY OF RESULTS - EXPLORATORY BOREHOLES

1.0 EXECUTIVE SUMMARY

1.1 Introduction

The investigation and findings described in this Technical Memorandum are the result of collaborative planning and discussions among the hydrogeologic experts that represent key stakeholders for groundwater use and management in the Salinas Valley and Monterey Peninsula area of central California. The Hydrogeology Working Group (HWG) consisted of the following experts: Mr. Tim Durbin and Mr. Martin Feeney (both representing the Salinas Valley Water Coalition and the Monterey County Farm Bureau), Mr. Peter Leffler (representing CalAm), and Dr. Dennis Williams (representing the CPUC CEQA Team). The HWG was formed as a result of a 2013 Settlement Agreement among parties to an ongoing CPUC-proceeding resulting from CalAm's proposed Monterey Peninsula Water Supply Project, to review and approve the scope of field investigation and development of a hydrogeologic conceptual model from which to construct the groundwater modeling tools. The names of the HWG members are presented here to indicate the general agreement among the members on the core findings of the investigative work described herein.

The work completed for this investigation was described in the Hydrogeologic Investigation Workplan (Workplan), Attachment 1, dated 18-Dec-2013. This investigation represents the first phase of field data gathering to develop a hydrogeologic conceptual model for the project area that is accepted by the stakeholders. The conceptual model will be used to refine the existing North Marina Ground Water Model (NMGWM) and construct a new focused model (CEMEX model). These models will be used to evaluate proposed project operations and impacts. Additional phases of field testing are planned and outlined in the Workplan.

Since September 2013, six exploratory boreholes were drilled at the CEMEX facility. Total borehole depth ranged from 250 feet (ft) below ground surface (bgs) to 350 ft bgs. Three of the boreholes were used to collect continuous soil cores, undisturbed soils samples, samples for mechanical grading

analysis, and geophysical logs. Two borings were used to construct isolated zones[1] for collecting water quality samples from aquifers at discrete depths and the last borehole (CX-B4) was used to collect continuous soil cores, undisturbed soils samples, samples for mechanical grading analysis, geophysical logs, and to collect water quality samples. A total of fifteen (15) aquifer zone tests have been completed at the CEMEX site. Water quality samples collected from the isolated aquifer zones were analyzed for the same suite of analytes outlined in the Workplan and included general physical, general mineral, volatile organic compounds, pesticides, tritium, and stable isotopes of oxygen and hydrogen.

Since September 2013, seven exploratory boreholes were drilled in the Moss Landing area. Six borings were drilled to a depth of 200 ft bgs. One boring (MDW-1) was drilled to a depth of 300 ft bgs. Each borehole was used to collect continuous soil cores, undisturbed soil samples, samples for mechanical grading analysis, and geophysical logs. Two isolated aquifer zones were constructed in boreholes ML-1, ML-2, ML-3, ML-4, ML-6, and PR-1 (for a total of 12 zones) to collect depth-specific groundwater quality samples. Four isolated aquifer zones were constructed to collect groundwater samples from Boring MDW-1.

1.2 Findings

1.2.1 General

- The conceptual hydrogeologic model developed from this investigation suggests that a feedwater supply system using slant wells at the CEMEX site is feasible and can utilize the Dune Sand Aquifer and underlying terrace deposits (180-Foot Equivalent Aquifer) as conduits to extract water through the seafloor beneath Monterey Bay.
- This opinion will be tested using the newly constructed CEMEX Model and the refined NMGWM and will be field tested using a test slant well and groundwater monitoring system as described in the Hydrogeologic Investigation Workplan.
- The conceptual model also indicates that the Perched “A” Aquifer between the Molera and Sandholt Road Salinas River State Beach parking lots could provide an alternative target for construction of a subsurface feedwater supply system.

1.2.2 CEMEX Area

The CEMEX facility is located on the westernmost edge of the 180/400-Foot Aquifer Subbasin of the Salinas Valley Groundwater Basin, as currently mapped by DWR (2003) and the MCWRA (2011). The findings of the investigation at CEMEX are summarized below:

[1] An isolated zone is constructed by the installation of well screen at a selected depth interval and isolating the well screen above and below using bentonite seals. Construction of isolated zones allows depth specific sampling of groundwater.

- A significant clay layer is not present beneath the Dune Sand Aquifer at the CEMEX site at elevations commonly attributed to the Salinas Valley Aquitard (SVA), suggesting a different depositional environment than that of the 180-Foot Aquifer in the Salinas Valley. The water quality data suggests groundwater in the Dune Sand Aquifer may be in hydraulic continuity with the underlying aquifer units. The degree of hydraulic continuity will be determined by construction of aquifer specific monitoring wells and the long-term pumping test of the test slant well.
- Stratigraphic relationships and lithologic observations indicate that the aquifer system underlying the Dune Sand Aquifer consists of terrace deposits that are older than the inland 180-Foot Aquifer deposits, since they underlie the Older Dune Sand.
- The terrace deposits appear to be a distinct lithologic unit in terms of geologic history and depositional environment in the Dune Highland area and may be hydrostratigraphically equivalent to the 180-Foot Aquifer in the Salinas Valley.
- For purposes of this document, the alluvial materials encountered near the coast (in the CEMEX area) are based solely on analyses of borehole samples (and geophysical borehole logs). As of yet, no direct correlation can be made between these coastal alluvial deposits and the standard naming convention found further inland (e.g., 180-Foot Aquifer, 400-Foot Aquifer, SVA, etc). Consequently, the naming convention agreed upon by the HWG, includes the word “equivalent” since the lithologic units that make up the aquifers at CEMEX and in the Salinas Valley are chronologically different, but stratigraphically equivalent.
- As a hydrogeologic unit, the terrace deposits will be designated as the 180-Foot Equivalent (180-FTE) Aquifer. The extent of hydrostratigraphic equivalence will be evaluated through a pumping test utilizing the test slant wells and a monitoring network.
- The current interpretation of the distinctive dark greenish-gray clay found at depths ranging from 241 to 282 ft bgs at CEMEX is that it may represent a change in the depositional history and is underlain by a unit equivalent to the Aromas Sand(?)/400-Foot Aquifer.
- Both the Dune Sand Aquifer and the underlying 180-FTE Aquifer extend seaward beneath the Monterey Bay.
- Groundwater in the Dune Sand Aquifer and most of the groundwater in the 180-FTE Aquifer exhibit high concentrations of total dissolved solids (TDS), ranging from 24,000 to 32,000 mg/L, indicating a seawater source.
- Hydraulic conductivity for the Dune Sand at CEMEX ranged from an average low value of 273 ft/day to an average high value of 779 ft/day.

- Hydraulic conductivity for the Older Dune Sand at CEMEX ranged from an average low value of 136 ft/day to an average high value of 372 ft/day.
- Hydraulic conductivity of the terrace deposits that make up the 180-FTE Aquifer ranged from an average low value of 113 ft/day to an average high value of 342 ft/day.
- Hydraulic conductivity values will be further refined based on the long-term test slant well pumping test.
- Analysis of cation/anion ratios indicates that groundwater in the lower portion of 180-FTE Aquifer and in the 400-Foot Aquifer have been geochemically altered due to seawater intrusion.
- Tritium results indicate that groundwater in the lower portion of the 180-FTE Aquifer is older than groundwater in the upper portion of the 180-FTE Aquifer and the Dune Sand Aquifer.
- Analysis of oxygen and hydrogen isotopes suggests that at both the CEMEX and Moss Landing sites, saltwater from the ocean is mixing with a freshwater source that has not undergone significant evaporation (as would be expected of a surface water source).
- Hydrostratigraphic relationships indicate that slant wells drilled into the Dune Sand Aquifer and 180-FTE Aquifer will receive recharge primarily from ocean sources through vertical leakage from the sea floor and horizontal recharge from offshore subsea aquifers. This will be tested by the CEMEX and refined NMGWMs as well as field pumping tests.

1.2.3 Moss Landing Area

The Moss Landing area is located north of the mouth of the Salinas River, which overlies the westernmost edge of the 180/400-Foot Aquifer Subbasin. Borings were drilled and sampled at Moss Landing Harbor and at the Molera, Potrero Road, and Sandholt Road parking lots of Salinas River State Beach. The exploratory borings primarily penetrated fluvial sediments associated with Holocene and Late Pleistocene Salinas River deposition.

The Perched[2] "A" Aquifer is ascribed to the Holocene river alluvium and considered to be the hydrostratigraphic equivalent of the Dune Sand Aquifer located to the south.

- The Perched "A" Aquifer in the Moss Landing area is composed of interbedded river and floodplain deposits.

[2] The term Perched "A" Aquifer refers to the shallow aquifer above the Salinas Valley Aquitard. Traditionally, the term "perched" aquifer refers to a hydrogeologic condition where an aquifer is formed by groundwater being present above (perching on) an impermeable unit such as clay but with an unsaturated portion of an aquifer between the bottom of the clay and the underlying saturated portion of a lower aquifer.

- With the exception of the sediments penetrated in Boring PR-1 and MDW-1, individual sand and sand and gravel lenses do not appear to be either vertically or areally extensive in Moss Landing.
- Significant variations in TDS concentrations suggest that groundwater is mixed with seawater, and is likely present in semi-isolated lenticular deposits.
- In general, the upper isolated aquifer test zones were above a depth of 110 ft bgs. TDS concentrations ranged from 3,200 mg/L to 34,000 mg/L.
- The lower isolated aquifer zones were generally constructed at depths exceeding 150 ft bgs. With the exception of Zone 1 of PR-1 (190-200 feet) at 630 mg/L, the TDS concentrations ranged from 7,400 mg/L to 34,000 mg/L.
- Boring PR-1 penetrated a very permeable unit in the Perched "A" Aquifer from 54 to 139 ft bgs. Groundwater in this interval approximated seawater quality (i.e., 34,000 mg/L). This unit is interpreted to continue, but decrease in thickness southward towards Boring MDW-1. To the north, the unit is interbedded with fine-grained units.
- It is interpreted that the lowest portion of Boring PR-1 penetrated the SVA. Very low TDS concentrations (630 mg/L) encountered in the lowest zone in Boring PR-1 suggest that isolated zones of freshwater may exist within the 180-Foot Aquifer or that the sand unit is laterally discontinuous and may be interbedded with the SVA. In this last interpretation, Boring PR-1 did not completely penetrate the SVA.
- Hydraulic conductivity values for the permeable portion of the Perched "A" Aquifer penetrated in PR-1 ranged from 194 ft/day to 717 ft/day, based upon relationships between grain size distribution and hydraulic conductivity.
- The permeable unit between Boring PR-1 and MDW-1 represents a potential location for slant wells.
- The Moss Landing Borings (ML-1, ML-2, ML-3, ML-4, and ML-6) did not penetrate significant thicknesses of permeable deposits to produce the required feedwater supply volume for the MPWSP.

1.2.4 Refinement of NMGWM and Development of Focused CEMEX Model

The geologic and hydrogeologic data collected during this investigation was used to prepare the interpretations of hydrostratigraphic relationships in the Moss Landing and CEMEX areas. A conceptual model of the hydrostratigraphic units from the Moss Landing to CEMEX area as interpreted from data collected from this investigation is shown below on Figure 1-1

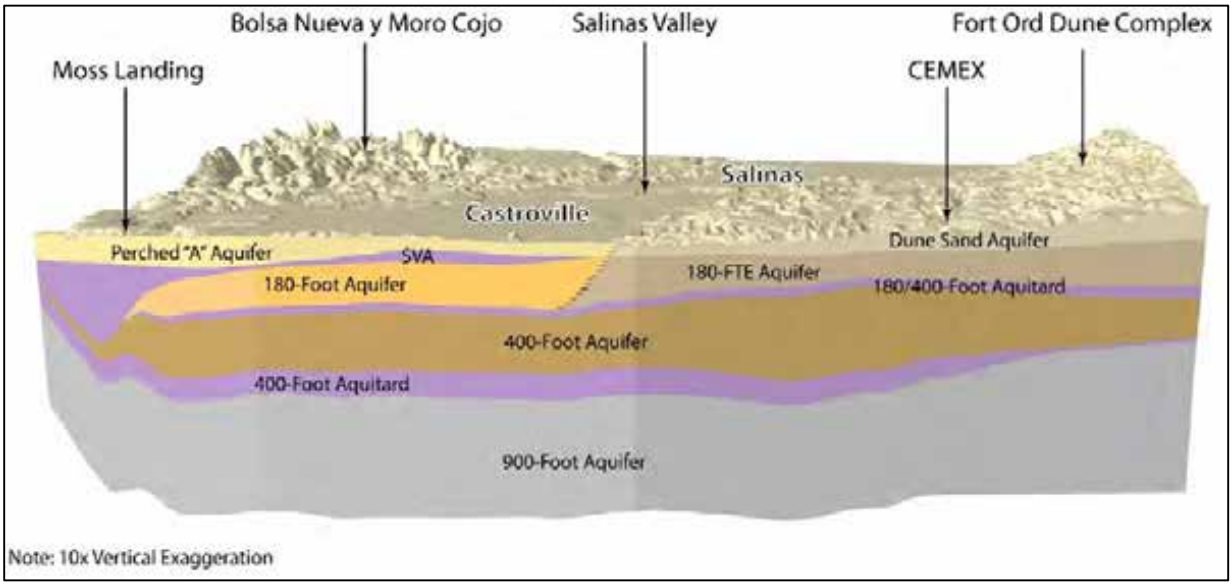

Figure 1-1. Hydrostratigraphic Model – Moss Landing to CEMEX Area

The following table provides a correlation of the geologic and hydrostratigraphic units to groundwater model layers of the Salinas Valley Integrated Groundwater and Surface Water Model (SVIGSM) and the NMGWM. In addition, the project technical advisory group described in Section 2.4 requested that a third model (a focused model) be constructed in the CEMEX area. The new focused model is designated as the CEMEX Model (CM) and will be discussed in Section 6. The model layers of the CM, as correlated to the SVIGSM and NMGWM, are also shown on Table 1-1.

Table 1-1.

Correlation of Geologic and Hydrostratigraphic with SVIGSM, NMGWM, and CM Model Layers

180/400-Foot Aquifer Subbasin			CEMEX Area			SVIGSM Layer[1]	NMGWM Layer	CEMEX Model Layer
Surface Geologic Units	Surface Geologic Units Map Symbol	Hydro-stratigraphic Units	Surface Geologic Units	Surface Geologic Units Map Symbol	Hydro-stratigraphic Units			
Benthic Zone	-	Benthic Zone	-	-	Benthic Zone	Constant Head	1	1
Alluvium	Qal[2]	Perched "A" Aquifer	Dune Sand	Qd	Dune Sand Aquifer	1a	2	2
			Older Dune Sand	Qod				3
								4
Older Alluvium	Qo	Salinas Valley Aquitard	Older Terrace/ Marine Terrace	Qt (Qmt?)	180-FTE Aquifer	1a	3	5
		180-Foot Aquifer				1	4	6
Older Alluvium/ Marine Terrace	Qo/Qmt							7
Older Alluvium/ Older Alluvium Fan – Antioch	Qo/Qfa							8
Older Alluvial Fan – Placentia	Qfp	180/400-Foot Aquitard	Aromas Sand (undifferenciated) (?)	Qar (?)	180/400-Foot Aquitard	2a	5	9
Aromas Sand (undifferentiated)	Qar	400-Foot Aquifer			400-Foot Aquifer	2	6	10
Aromas Sand – Eolian/Fluvial Lithofacies	Qae/Qaf							
Paso Robles Formation	QT	400/900-Foot Aquitard	Paso Robles Formation	QT	400/900-Foot Aquitard	3a	7	11
		900-Foot Aquifer			900-Foot Aquifer	3	8	12

[1]SVIGSM considers "a" layers to be aquitards (vertical hydraulic conductivity and thickness are input)

[2]Subsurface Holocene geologic unit not mapped at surface

2.0 INTRODUCTION

2.1 Background

The California American Water Company (CalAm) is proposing the Monterey Peninsula Water Supply Project (MPWSP, or proposed project) for the purpose of developing water supplies to replace those portions of CalAm's existing supplies that have been constrained by legal decisions regarding CalAm's diversions from the Carmel River and pumping from the Seaside Groundwater Basin. The MPWSP would include construction of a subsurface Seawater Intake System and a desalination plant with a rated capacity of 9.6 million gallons per day (MGD) or 6.4 MGD, which is approximately 10,800 acre-ft per year and 7,200 acre-ft per year, respectively.

On April 23, 2012, CalAm filed an application with the California Public Utilities Commission (CPUC) for the MPWSP (A.12-04-019), seeking a Certificate of Public Convenience and Necessity (CPCN) to construct, own, and operate a desalination facility for water supply on the Monterey Peninsula. The MPWSP application to the CPUC proposed a subsurface intake feedwater system consisting of slant wells located at the CEMEX sand mining property in Marina, CA.

In a letter dated September 26, 2012, the CPUC asked the State Water Resources Control Board (SWRCB) whether CalAm has the legal right to extract desalination feedwater for the proposed MPWSP. The CPUC requested an opinion on whether Cal-Am has a credible legal claim to extract feedwater for the proposed MPWSP in order to inform the CPUC's determination regarding the legal feasibility of the MPWSP. The SWRCB concluded in July 2013, that the conditions in the aquifer where MPWSP feedwater would be extracted could be either confined or unconfined. However, there was not enough information at that time to determine what types of conditions exist at the location of the proposed MPWSP wells. The SWRCB recommended that studies are needed to determine the extent of the Dune Sand Aquifer, the water quality and water quantity of the Dune Sand Aquifer, the extent and thickness of the Salinas Valley Aquitard, and the extent of the 180-Foot Aquifer, if present.

In August 2013, a Settlement Agreement was signed by several of the Parties associated with the CPUC proceeding. The parties agreed that CalAm and Salinas Valley Water Coalition's (SVWC) hydrogeologists would work with other experts to develop and implement a workplan for the proposed source water intake sites consistent with the study recommendations presented in SWRCB's July 2013 Review of the MPWSP.

2.2 Extracting Seawater from Subsea Aquifers for Feedwater Supply

The intake system proposed by CalAm is expected to supply a high percentage of ocean water from aquifer units that are in hydraulic continuity with the ocean floor. The feasibility of extracting seawater

from the aquifers that underlie the ocean floor using slant wells is directly dependent on the vertical and horizontal distribution of hydrostratigraphic units in the project areas and their hydraulic properties.

Previous studies have indicated that in the vicinity of the CEMEX facility, the shallow Dune Sand Aquifer may directly overlie the 180-Foot Aquifer, or may be separated from the 180-Foot Aquifer by low permeability material of the hydrostratigraphic unit designated as the Salinas Valley Aquitard (SVA). Therefore, a key aspect of the exploratory boring program at the CEMEX facility was to evaluate the presence and vertical distribution of hydrostratigraphic units. If the Dune Sand Aquifer directly overlies the 180-Foot Aquifer or an equivalent hydrostratigraphic unit (i.e., no intervening clay layer of significant thickness), and if both units are in hydraulic connection with the ocean floor, feedwater can be obtained directly from the subsea portion of both aquifers with little or no impact on the inland aquifers.

A groundwater model was developed by GEOSCIENCE in 2008 and is called the North Marina Ground Water Model (NMGWM). The NMGWM was developed based on existing data and conceptual models of the hydrogeology in the region, and has been used to evaluate several proposed projects in the area. The NMGWM is a three dimensional variable density finite difference model that uses industry standard computer codes (MODFLOW, MT3DMS and SEAWAT). Regional boundary conditions for the model are obtained from the Salinas Valley Integrated Groundwater and Surface Water Model (SVIGSM). Construction of a third model, a focused model centered at CEMEX, was requested by the Hydrogeology Working Group (HWG). The new model will have additional model layers and a finer grid size than the NMGWM. The new focused model is herein referred to as the CEMEX Model (CM). The CM will be constructed with the field data collected from this investigation. The NMGWM includes the area of the current investigation (i.e., CEMEX and Moss Landing) and will be refined (based on recent field data). Both the CM and the NMGWM will be used to support the CPUC's environmental review process, and to design a subsurface feedwater supply system.

2.3 Subsurface Intakes

Subsurface intakes are generally favored among regulatory agencies because of: (1) the natural water filtration and pretreatment provided by ocean floor sediments, which reduce the need for some treatment chemicals during the desalination process, and (2) the minimal growth of marine organisms that occurs inside the intake pipeline. The slant well subsurface intake system is also a primary consideration because the system will allow for a feedwater supply to be obtained from ocean sources (i.e., vertical leakage through the sea floor and horizontal recharge from offshore aquifers). In general, source water derived from subsurface wells requires significantly less filtration when compared to raw seawater. Subsurface wells are also generally considered a low-impact technology with respect to impingement and entrainment.

The subsurface intake site proposed by CalAm is located at the CEMEX property in Marina. Alternative intake sites have been proposed in the Moss Landing area. Therefore, this technical memorandum addresses the potential feasibility of subsurface intakes in both areas.

Figure 1 is a general location map for the current study. Figure 2 shows the locations of borings completed in both the CEMEX and the Moss Landing areas. Area maps specific to CEMEX facility and the Moss Landing area are shown in Figures 3 and 4, respectively.

2.4 Formation of Hydrogeology Working Group and Formation of the Hydrogeologic Investigation Workplan

As noted earlier, the Settlement Agreement laid the ground work for a collaborative effort by recognized experts in geology, hydrogeology and modeling, representing stakeholders of groundwater use and management in the project area. This led to the development of the Hydrogeology Working Group[3] (HWG). The HWG first met on April 25, 2013, to discuss conceptual models and to form a collaborative plan of investigation to assess the hydrogeologic conditions in the project area. As with any collaborative group, individual opinions need to be evaluated against actual field data and testing to arrive at a conceptual model that reflects a common understanding at the areas of concern. A draft workplan was prepared which provides a phased approach to progressively investigate the hydrogeology and the potential effects to aquifers from the use of subsurface slant wells for obtaining feedwater supply. The draft workplan was submitted to the HWG on August 2, 2013, for review and comment. The final workplan incorporated comments and recommendations by members of the HWG, covered the investigative steps needed to evaluate the project impacts, and was submitted to the HWG on December 18, 2013. This final workplan became the hydrogeology investigation roadmap.

2.5 Project Documents

2.5.1 Hydrogeologic Investigation Workplan

The process adopted by the HWG for the workplan consists of on-going steps of data collection and analysis. The data collected from this initial phase of investigation will be used to construct the CM and to refine the NMGWM. Each subsequent step of data collection will be followed by refinement of the CM and NMGWM, which are the tools being developed to evaluate the short- and long-term hydrogeologic impacts in the project area from operation of the MPWSP. Each step of data gathering will be preceded by an update of the workplan as appropriate, describing the proposed work and

[3] The HWG participants include: Tim Durbin and Martin Feeney (representing the Salinas Valley Water Coalition and the Monterey County Farm Bureau), Peter Leffler (representing CalAm), and Dennis Williams (representing the CPUC CEQA Team).

desired outcomes. Results will be documented by a technical memorandum describing the methods of data collection, findings and recommendations, and the results of the model refinements.

The MPWSP Hydrogeologic Investigation Workplan (HWP) is the main working document for all exploratory, testing, and modeling work, including:

- Attachment 1 - Technical Specifications – Exploratory Boreholes
- Attachment 2 - Technical Specifications – Test Slant Well
- Attachment 3 - Technical Specifications – Monitoring Wells
- Attachment 4 - Technical Specifications – Long Term Pumping Test and Monitoring Program
- Attachment 5 - Technical Specifications – Full Scale Slant Well Field

As such, the HWP is a "living document" which will be modified as appropriate as the project progresses.

To date, technical specifications for the boreholes (Attachment 1) was submitted to the HWG for review and comment, forming the basis for the current investigation. Preliminary Technical Specifications (Attachment 1 of the Hydrogeologic Investigation Report) for the test slant well and two monitoring wells were prepared and submitted to Cal Am for planning purposes. Subsequently, it was decided by CalAm to prepare separate technical specifications for the test slant well and for the monitoring wells. These documents were recently submitted for review. Therefore, after review of the findings of the current document by the HWG, the Technical Specifications for the Test Slant Well and Technical Specifications for the Monitoring Wells (Attachment 2 and Attachment 3 of the Hydrogeologic Investigation Workplan) will be updated if appropriate.

2.5.2 Hydrogeologic Investigation Report

The companion document to the Workplan will be the Hydrogeologic Investigation Report (HIR) and will include technical memorandums documenting all exploratory and testing activities as well as progressive model refinements and impacts. This document will include the following:

The Hydrogeologic Investigation Report will include a series of technical memorandum's which provide the data and analysis conducted throughout the study period including the following:

- Attachment 1 - Technical Memorandum (TM) – Summary of Results – Exploratory Boreholes
- Attachment 2 - Technical Memorandum (TM) – Summary of Results – Test Slant Well and Monitoring Wells
- Attachment 3 - Technical Memorandum (TM) – Summary of Results – Long Term Pumping Test and Monitoring Well Program

- Attachment 4 - Technical Memorandum (TM) – Refined ground water model results following exploratory boreholes, monitoring wells, test slant well and full scale system

The current document is Attachment 1 of the Hydrogeologic Investigation Report.

2.6 Purpose and Scope

2.6.1 Purpose

As part of the Workplan, a geotechnical borehole investigation was undertaken at several sites along the Monterey coast. The purpose of the exploratory boreholes was to obtain information on the lithologic and hydraulic character of the hydrostratigraphic units and the vertical and horizontal distribution of the units. The data gathered from the boreholes will be used to update the NMGWM. The model layers will be refined using the site-specific depth and thickness information of the hydrostratigraphic units. The hydraulic properties of the units obtained from the field work and the water quality data will be used for model input. In other words, the borehole data will help to:

- Characterize the aquifer units,
- Characterize the water contained in the aquifer units (to determine if it is seawater, groundwater, or seawater intruded groundwater), and
- Determine if the Salinas Valley Aquitard (a blue clay layer) exists between the aquifer units at this location.

This technical memorandum:

1. Presents the results from the exploratory borings at the CEMEX facility (see Figure 2) and the Moss Landing area (see Figure 3),
2. Provides an interpretation of the geologic units encountered in the boreholes as they relate to the conceptual hydrogeologic model, and
3. Provides recommendations for refinements to the NMGWM based on the newly collected data.

2.6.2 Scope

The Moss Landing area investigation included drilling of exploratory borings at the Molera, Potrero Road, and Sandholt Road Salinas River State Beach parking lots and along Pacific Coast Highway and along Sandholt Road at Moss Landing Harbor. The CEMEX area investigation included exploratory

borings drilled on the CEMEX facility at locations approved by CEMEX. The approved scope of work for the investigation included the following:

- Drilling of sonic boreholes from depths ranging approximately 200 to 350 feet (ft) below ground surface (bgs)
- Collecting continuous soil cores from all borings
- Preparation of lithologic logs of the materials penetrated in each borehole
- Photographs of soil cores
- Geophysical borehole logs
- Construction of two groundwater quality sampling zones in each borehole in the Moss Landing area and collection of water samples from each zone
- Figures, maps, and photographs showing site locations and conditions
- Borehole destruction details
- Mechanical grading analysis
- Analysis of hydraulic conductivity using the Hazen Approximation, Krumbein-Monk, and Kozeny-Carman methods
- Laboratory vertical and horizontal permeameter testing
- Evaluation of groundwater quality conditions
- Preparation of recommendations for model layer revisions

2.6.3 Added Scope

At the initiation of this study, exploratory borings at the CEMEX facility were limited to the collection of lithologic and geophysical data only. More recently, the scope was expanded to include two additional boreholes at the CEMEX facility to collect groundwater quality samples for borings not previously sampled for groundwater quality (see Section 3.1.6). A water quality boring (CX-B1WQ) was drilled adjacent to Boring CX-B1. A second water quality boring (CX-B2WQ) was drilled near Boring CX-B2. A fourth boring (CX-B4, third water quality boring) was also drilled at CEMEX to obtain continuous core and geophysical logs for lithologic logging and to collect groundwater quality samples. The locations of the water quality borings at CEMEX are shown on Figure 2 and Figure 3. In addition, to further explore the area south of Potrero Road, an exploratory boring (MDW-1) was drilled in the Molera parking lot of Salinas River State Beach located at Monterey Dunes Way. Four isolated zones were constructed in MDW-1 to collect water quality samples.

3.0 FIELD INVESTIGATION

3.1 Borehole Drilling and Sampling

3.1.1 Drilling

The sonic drilling method was used for all 13 boreholes for this investigation. All of the sonic drilling was completed by Cascade Drilling of Upland, California. Drilling commenced at the Potrero Road site in September 2013. Sonic drilling produced continuous core samples that were minimally disturbed. The cores from all borings were logged by the field geologist, photographed, and placed in wooden core boxes. Detailed borehole logs for each borehole are provided in Appendix A1. The cores were placed in storage at the Cal Am facility in Pacific Grove, California. Sediment samples were collected of each lithologic unit encountered in the boreholes by the field geologist. Photographs of the core are provided in Appendix B. Table 3-1 below provides a summary of drilling dates for each exploratory boring.



Sonic Drilling Rig and Support Equipment

Table 3-1. Chronology of Field Investigation

Borehole	Location	Drill Dates
PR-1	Moss Landing: SR State Beach Portrero Road Parking Lot	September 20-26, 2013
ML-1	Moss Landing: SR State Beach Sandholt Road Parking Lot	October 1-8, 2013
CX-B1	CEMEX	October 21-26, 2013
CX-B2	CEMEX	November 4-8, 2013
CX-B3	CEMEX	November 9-13, 2014
ML-6	Moss Landing (MBARI)	November 18-24, 2013
ML-4	Moss Landing (Coast Highway)	November 25,26 and December 2-8, 2013
ML-2	Moss Landing (Del Mar Fisheries)	December 9-20, 2013
ML-3	Moss Landing (Coast Highway)	January 6-14, 2014
CX-B1WQ	CEMEX	February 17-26, 2014
CX-B2WQ	CEMEX	March 4-7, 2014
CX-B4	CEMEX	March 20 -April 10, 2014
MDW-1	Moss Landing: SR State Beach Molera Parking Lot	April 23-May 10, 2014

3.1.2 Core Sampling

The core sampling was conducted using a 4-inch to 6-inch diameter inner casing. The core barrel is attached to small-diameter drill rods and is vibrated ahead of the outer casing collecting undisturbed formation materials as the core samples. With each 10-ft advance of the casing, the core barrel was extracted and brought to the surface to retrieve the core. Soil core samples were collected continuously during drilling of all the exploratory boreholes. Upon collection, all soil cores were placed in 6-mil polyethylene plastic sleeves measuring approximately 2 ft in length. Each bag was photographed and properly labeled in the field with the client name, boring number, sample depth interval, and date of collection. The core samples were then split longitudinally in half and visually classified (logged) in the field in accordance with the Unified Soil Classification System (USCS).







3.1.3 California-Modified Split-Spoon Sampling

Split-spoon samples were collected at specified depths from each borehole to obtain undisturbed samples of the formation materials for the purpose of estimating hydraulic conductivity using a laboratory permeameter. Samples were collected from the Dune Sand Aquifer, fine-grained aquitard material, and coarse-grained material.



The split-spoon sampler holds three thin-walled metal (brass or stainless steel) sleeves measuring approximately 6 inches in length and 2.5 inches in diameter. The sampler was attached to a small diameter drill rod that is pushed through 18- to 24-inches of undisturbed formation material ahead of the drilling bit. Each time the split-spoon sampler is retrieved, the sampling sleeves were removed and the exposed ends were covered with Teflon® sheets, covered with plastic caps, and taped to preserve the sample for laboratory testing. Each sleeve was marked with

the project name, borehole name, sample depth and number, and the date. The sample tubes were submitted to PTS Laboratories, Inc. of Santa Fe Springs, California under chain of custody protocol for analysis of vertical and horizontal soil hydraulic conductivity and selected soil parameters. Chain of custody forms are provided in Appendix C, along with the results of the laboratory testing.

3.1.4 Mechanical Grading Analysis

Representative samples of coarse-grained intervals were collected from core samples for mechanical grading analysis. The samples were sieved in the GEOSCIENCE soil laboratory and the grain size distribution was plotted on charts. The depth intervals at which samples were collected for mechanical grading analysis are shown on the corresponding lithologic log (see Appendix A1). Samples were sieved using U.S. Standard sieves with mesh sizes ranging from 0.0740 mm (0.0029 inches) to 9.525 mm (0.375 inches). Grain size distribution plots are provided as Appendix D. Grain size distribution was used to estimate the hydraulic conductivity; discussed in Section 3.2.3. Table 1 (attached) provides a summary of mechanical grading analysis and hydraulic conductivity estimates. Table 1 includes depth interval, lithology, geologic formation, conductivity direction, and the average hydraulic conductivity value for each sample interval. Soil types listed are based upon the results of the mechanical grading analyses.

3.1.5 Geophysical Borehole Logging

Once each borehole target depth was reached, the core barrel was removed and a 4-inch diameter PVC screen was installed within the borehole prior to removing the outer sonic casing. The PVC screen ensured that the borehole remained open during geophysical logging.

Geophysical logs were run throughout the total depth of each borehole. Each geophysical run included the following suite of logs:

- Dual Induction,
- Gamma,
- Temperature, and
- Fluid Resistivity.

Dual induction logs (DIL) were used to determine resistivity of formation materials by measuring conductivity adjacent to the induction tool.[4] The induction tool focuses alternating electromagnetic

[4] Conductivity is measured as (mho/m) and is the inverse of resistivity.

currents into the formation, with medium and deep measurements determined by transmitter/receiver spacing. The DIL is comprised of six (6) separate measurements:

- **RILM** - *Resistivity, Induction Log Medium*
- **RILD** - *Resistivity, Induction Log Deep*
- **CILM** - *Conductivity, Induction Log Medium*
- **CILD** - *Conductivity, Induction Log Deep*
- **SP** - *Spontaneous Potential*
- **GR** - *Gamma Ray*

Gamma ray (GR) logs were used to augment and aid identification of lithologic units encountered within each borehole.

A temperature log measures absolute fluid temperature within a borehole. A calculated differential measurement is provided with the log, which allows detection of vertical fluid movement within a borehole, including fluid entry and exit points.

Fluid resistivity logs provide a measure of the resistivity of borehole fluid (in units of ohm-m) and provide a calculated differential curve. This log was used for correlation of temperature measurements, to assist in locating the presence of borehole water with higher total dissolved solids (TDS) concentrations, and to differentiate between waters from various contributing aquifer zones.

All geophysical logs are provided in Appendix E. The geophysical borehole logs and lithologic descriptions were used to determine recommended depth intervals for zone testing and to delineate the aquifer systems in the study area. The results will be used to design project monitoring wells for long-term aquifer testing.

3.1.6 Isolated Aquifer Zone Testing for Water Quality Sample Collection

Following completion of geophysical logging, the lithologic and geophysical logs were reviewed to select depth intervals that would likely yield groundwater with the lowest and highest salinity. Depth intervals selected were used to construct isolated aquifer zones for groundwater quality sampling. An isolated aquifer zone test consists of constructing a temporary well with a 10-foot well screen interval placed at the depth of the lithologic unit to be tested. A seal is constructed above and below the well screen to isolate the portion of the aquifer for water quality testing. Two depth intervals were selected for groundwater sampling zones for each Moss Landing borehole (Borings Ml-1, ML-2, ML-3, ML-4, ML-6,

and PR-1). Four isolated zones were constructed in Boring MDW-1. For the CEMEX area, a water quality boring was drilled near Boring CX-B1 and designated Boring CX-B1WQ. Another boring was drilled near Boring CX-B2 and designated as Boring CX-B2WQ. A third boring, Boring CX-B4 was drilled approximately 1,500 feet inland from CX-B2WQ and used to collect water quality samples. The locations of the water quality borings (CX-B1WQ, CX-B2WQ, and CX-B4) are shown on Figure 3. Six zones were selected for construction in Boring CX-B1WQ in an effort to assess potential water quality changes between the Dune Sand Aquifer and the underlying aquifer units. The groundwater quality samples were sent to the laboratory with an expedited request. After receipt of groundwater quality results for samples from Boring CX-B1WQ, and after reviewing the geophysical logs and lithologic logs, four zones were selected for Boring CX-B2WQ. The zones were selected to confirm and augment water quality data collected from Boring CX-B1WQ, and to develop an overall profile of groundwater quality at the CEMEX site. Five zones were selected for Boring CX-B4.

Each isolated zone was constructed by placing a bentonite seal below the selected zone interval. A 10-ft PVC screen was placed opposite the selected sampling interval and filter pack consisting of Monterey Sand #3 was placed opposite, above, and below the well screen. A second bentonite seal was placed above the filter pack interval. The bentonite seals effectively isolated the groundwater quality interval from groundwater above and below the selected interval. Each isolated aquifer zone is constructed specifically for the hydrogeologic conditions at the borehole site. The isolated aquifer zone testing forms are provided in Appendix F. Table 3-2 below summarizes the depth of zones by boring selected for the water quality sampling. A total of 31 zones were constructed for water quality sampling.

Table 3-2. Isolated Aquifer Zone Depth Intervals

Zone No.	ML-1	ML-2	ML-3	ML-4	ML-6	PR-1	MDW-1	CX-B1 WQ	CX-B2 WQ	CX-B4
Zone 1 (ft bgs)	113.5-118.5	167-177	180-190	163.5-173.5	152-162	190-200	237-247	274-284	215-225	306-316
Zone 2 (ft bgs)	90-100	90-100	103-113	74.5-84.5	100-110	125-135	187-197	237-247	161-171	248-258
Zone 3 (ft bgs)	-	-	-	-	-	-	152-162	182-192	104-114	155-165
Zone 4 (ft bgs)	-	-	-	-	-	-	60-70	134-144	55-65	110-120
Zone 5 (ft bgs)	-	-	-	-	-	-		84-94	-	58-68
Zone 6 (ft bgs)	-	-	-	-	-	-		51-61	-	
Total Depth (ft bgs)	200	200	200	201	200	200	300	306	250	350

See Appendix F for zone construction details.

Once a zone was constructed, the aquifer unit across from the well screen was developed using a swab and brush to remove fine sediment. A submersible pump was placed in the temporary well and pumped. Field measurements of groundwater quality were collected to evaluate when the groundwater quality had stabilized, and a representative sample of the aquifer unit was collected. Groundwater quality parameters measured and recorded in the field are provided in Table 3-3.

Table 3-3. Field Groundwater Quality Parameters

Parameters and Units	
Time (minutes)	Salinity (ppt)
Water Level (depth in feet, bgs)	Dissolved Oxygen (DO) (mg/L)
Temperature (degrees F)	pH
Conductivity (us/cm)	Oxygen Reduction Potential (ORP) (mV)
Calculated Total Dissolved Solids (TDS) (mg/L)	Turbidity (NTU)

The field measurements were collected approximately every three to five minutes, until at least three field parameters stabilized. The stabilization criteria are provided in Table 3-4.

Table 3-4. Parameter Stabilization Criteria

Parameters and Units	
pH	+/- 0.1 unit
Conductivity	+/- 3%
ORP	+/- 10 mV
Turbidity	+/- 10%
DO	+/- 10%

Groundwater samples were not collected until the turbidity reading was less than 1 NTU in order to avoid the potential for additional metal concentrations from sediments within the sample. Copies of the field data sheets used to record field parameters during zone testing are provided in Appendix F. The results of the laboratory testing are summarized in Table 3a and Table 3b. Copies of the groundwater quality laboratory reports are provided in Appendix G.

3.1.7 Borehole Destruction

Each exploratory borehole was destroyed immediately following completion of geophysical logging (Borings CX-B1, CX-B2 and CX-B3) or after isolated aquifer zone testing (remainder of borings). Each borehole was destroyed by filling with neat cement and native materials. To prevent material bridging during placement, all materials used for borehole destruction were placed through a tremie pipe. Borehole destruction was accomplished in accordance with the approved borehole destruction plan submitted by Cascade Drilling to Monterey County Health Department and in accordance with DWR Bulletins 74-81 and 74-90. The fine-grained units (i.e., aquitards) encountered beneath the Dune Sand Aquifer were sealed using a neat cement grout to insure that mixing of groundwater does not occur between aquifer units.

3.2 Estimates of Hydraulic Conductivity

Multiple estimates of hydraulic conductivity were made using mechanical grading analysis properties and vertical and horizontal conductivity/permeability values from laboratory analyses of relatively undisturbed soil samples.

3.2.1 Mechanical Grading Analysis

Mechanical grading analyses were used to determine the distribution of sediment grain sizes from samples collected from the continuous core. Three analytical methods were used to estimate hydraulic conductivity from the distribution of grain size in the samples. The Hazen Approximation, Krumbein-Monk, and Kozeny-Carman methods were used to estimate hydraulic conductivity from grain size distribution curves. A brief description of these methods is provided below.

Hazen Approximation

Hazen's Approximation is an empirical equation that estimates hydraulic conductivity to be proportional to the square of the effective grain size, which is expressed as:

$$K = C\,(d_{10})^2$$

Where:

K	=	Hydraulic conductivity (cm/s)
C	=	Hazen's constant, approximately 1 (dimensionless)
d_{10}	=	Grain size in mm for which 10% of the particle pass by weight

This method is applicable to sands where the effective grain size (d_{10}) is between approximately 0.1 and 0.3 mm. Hazen's Approximation was originally determined for uniformly graded sands, but it can provide rough but useful estimates for most soils in the fine-grained sand to gravel range (Freeze and Cherry, 1979).

Krumbein-Monk

Krumbein and Monk (1942) described hydraulic conductivity in the form of Darcies for unconsolidated sands with a log-normal grain size distribution. Using this description, they used a semi empirical equation assuming forty percent porosity, which is expressed as:

$$K = \frac{\rho_\omega g}{\mu} \cdot \left[\frac{\phi^3}{1-\phi^2}\right] \cdot \frac{d_m^2}{180}$$

where:

ρ_ω = Fluid density (kg/m^3 or ft/s^3), assumed to be the average temperature of groundwater (22 degrees Celsius)

d_m = Particle diameter or characteristic length of a given material (m or ft)

ϕ = Porosity

μ = Dynamic viscosity (Pa-s pr lbs-s/ft^2), also assumed to be the average temperature of groundwater (22 degrees Celsius)

g = Gravitational constant (m/s^2 or ft /s^2)

Kozeny-Carman

One of the most widely used equations for determining hydraulic conductivity from characteristic lengths is the Kozeny-Carman Equation. Kozeny proposed in 1927, which was later modified by Carman in 1956, a method for determining hydraulic conductivity from the following:

$$K = \frac{\rho_\omega g}{\mu}\left[\frac{n^3}{(1-n)^2}\right]\frac{d_m^2}{180}$$

where:

ρ_ω = Fluid density (kg/m^3 of ft/s^3), assumed to be the average temperature of groundwater (22 degrees Celsius)

n	=	Total Porosity
μ	=	Dynamic viscosity (Pa-s or lbs-s/ft^2), also assumed to be the average temperature of groundwater (22 degrees Celsius)
g	=	Gravitational constant (m/s^2 or ft/s^2)
d_m	=	Harmonic mean particle diameter calculated from the particle size distribution (m or ft)

and

$$d_m = 100\% / \left[\sum \left(\frac{f_i}{D_{ave,i}} \right) \right]$$

where:

f_i	=	fraction of particles between two sieve sizes; larger [l] and smaller [s] (%)
$D_{ave,i}$	=	average particle size between two sieve sizes (cm) = $D_{li}^{0.5} \times D_{si}^{0.5}$

Table 1 (attached) provides a summary of hydraulic conductivity calculations based on mechanical grading analyses from the three methods. The soil types listed may not represent the complete lithologic interval from which they were obtained since the lithology is generally bedded and gradational.

3.2.2 Summary of Hydraulic Conductivity Values

Table 3-5 summarizes the hydraulic conductivity estimates from mechanical grading analyses for ten soil types collected from both the CEMEX and Moss Landing sites. First, the average hydraulic conductivity was calculated separately for all soil types using each method. Secondly, the range of horizontal hydraulic conductivity shown in the Table 3-5 for each type of soil was determined by the method yielding the minimum average and the method yielding the maximum average hydraulic conductivity.

Table 3-5. Summary of Average Hydraulic Conductivity Estimates by Soil Type

Summary of Hydraulic Conductivity Estimates from Mechanical Grading Analysis	
Soil Type (Unified Soils Classification System Designation)	**Horizontal Hydraulic Conductivity Range (ft/day)**
Organic Clay (CH)	NA
Silty Clay (CL)	NA
Silt (ML)	NA
Silty Sand (SM)	77 - 223
Poorly Graded Sand (SP)	112 - 349
Well Graded Sand (SW)	468 - 1,440
Sand with Silt (SP-SM)	33 - 135
Sand with Gravel (SP+Gravel)	342 - 817
Silty Sand Sand + Gravel (SM+ Gravel)	311 - 1,150
Well Graded Sand + Gravel (SW + Gravel)	469 - 859
Well Graded Sand + Gravel (SW + Gravel)	445 - 1,322
Sand with Clay + Gravel (SW-SC + Gravel)	446 - 1,511
Gravel (GW)	334 - 849

Table 3-6 summarizes the hydraulic conductivity estimates using the same approach as Table 3-5 but separately for samples collected from CEMEX and samples collected from Moss Landing. Not all soil types were represented at both sites. In the case where a sample was represented at only one site (i.e., GW: Gravel at CEMEX) the range of hydraulic conductivity was taken from Table 3-5. If a soil type was obtained from both CEMEX and Moss Landing sites (i.e., SW: Well- Graded Sand), the average hydraulic conductivity was calculated separately for each site from the range of values estimated from the samples collected at each site. For the SW: Well-Graded Sand example, the range of average hydraulic conductivity values reported in Table 3-5 falls between the range of average values calculated from each site individually, as shown in Table 3-6.

Table 3-6. Range of Hydraulic Conductivity from Mechanical Grading Analysis (MGA)

Lithology	MGA, CEMEX[1]		MGA, Moss Landing[1]	
	Min Avg Permeability, K [ft/day]	Max Avg Permeability, K [ft/day]	Min Avg Permeability, K [ft/day]	Max Avg Permeability, K [ft/day]
GW: Gravel	334	849	-	-
SM: Silty Sand	50	144	146	421
SM: Silty Sand with Gravel	-	-	311	1,150
SP: Sand	113	331	112	356
SP: Sand with Gravel	176	549	397	907
SP-SM: Sand with Silt	-	-	33	135
SP-SM: Sand with Silt and Gravel	-	-	445	1,322
SW: Well-Graded Sand	286	1,012	619	3,364
SW: Well-Graded Sand with Gravel	-	-	469	859
SW-SC: Sand with Clay and Gravel	-	-	446	1,511

[1] Mechanical grading analysis of formation samples performed by GEOSCIENCE Support Services, Inc. CEMEX MGA includes samples from boreholes CX-B1, CX-B2, CX-B3, and CX-B4. Moss Landing MGA includes samples from boreholes PR-1, ML-1, ML-2, ML-3, ML-4, and ML-6, and MDW-1.

Only one hydraulic conductivity value calculated from pumping test data is available for the aquifer units at CEMEX. Staal, Gardner, and Dunne (SGD, 1992) completed a pumping test in the Dune Sand Aquifer in 1992. Their reported hydraulic conductivity value is 1,750 gpd/ft^2, or approximately 230 ft/day. Table 3-7 provides a summary of the minimum and maximum hydraulic conductivity values for the CEMEX area. The value reported by SGD is comparable to the value estimated for the CEMEX borehole samples for the Older Dune Sand.

Table 3-7. Hydraulic Conductivity for Geologic Units at CEMEX

Geologic Unit	Minimum K-Value (ft/day)	Maximum K-Value(ft/day)
Dune Sand (Qd)*	273	779
Older Dune Sand (Qod)	136	372
Terrace Deposits (Qt)	113	342

*Data from Moss Landing for Qd used here.

Table 3-8 provides a summary of minimum and maximum hydraulic conductivity values for the Moss Landing area.

Table 3-8. Hydraulic Conductivity for Geologic Units at Moss Landing

Geologic Unit	Minimum K-Value (ft/day)	Maximum K-Value (ft/day)
Dune Sand (Qd)	227	619
Perched "A" Aquifer (Qal)	194	717

3.2.3 Laboratory Permeameter Estimates

Undisturbed drive samples were collected from each exploratory boring. A total of 41 samples were submitted for laboratory vertical and horizontal permeameter testing. Samples were selected to represent the Dune Sand Aquifer, fine-grained units such as clay layers, and the aquifer units underlying the Dune Sand Aquifer. The laboratory test reports are provided in Appendix C. Table 2 (attached) summarizes the laboratory vertical and horizontal permeability results. Table 3-9 below summarizes the range of laboratory permeability values based on soil type. The laboratory results in general are much lower than anticipated. The horizontal values appear significantly lower than an anticipated increase of 10 to 20 times the vertical permeability values.

The values provided from both the laboratory permeameter test and the mechanical grading analyses are approximate and will be revisited during the long-term aquifer test. However, the values estimated using the mechanical grading analysis are much closer to those anticipated from future aquifer testing and will form the starting point for refinements to the model in the CEMEX and Moss Landing area.

Table 3-9. Summary of Laboratory Hydraulic Conductivity Results by Soil Type

Summary of Laboratory Hydraulic Conductivity Results by Soil Type		
Soil Type (Unified Soils Classification System Designation)	Vertical Hydraulic Conductivity Range (ft/day)	Horizontal Hydraulic Conductivity Range (ft/day)
Organic Clay (CH)	0.003 - 0.014	NA
Silty Clay (CL)	0.005 - 0.283	NA
Silt (ML)	0.03	0.02
Silty Sand (SM)	0.20 - 1.38	0.37 - 4.34
Poorly Sorted Sand (SP)	0.28 - 17.29	1.80 - 36.56
Sand + Gravel (SP+ Gravel)	0.26 - 14.91	0.17 - 14.51
Sand/ Silty Sand (SP/SM)	0.13	0.31
Sand/Silty Sand/Gravel (SP/SM + Gravel)	24.15	17.74
Well Graded Sand + Gravel (SW + Gravel)	13.18	11.34

4.0 GEOHYDROLOGIC SETTING

4.1 Historical Background

This study includes an investigation of the geohydrologic conditions along the coast at the mouth of the Salinas River from Moss Landing south to the CEMEX facility (see Figure 1). Groundwater is present in multiple aquifer systems in several subbasins in the project area. Data from this study indicates that water quality is variable both in vertical and areal distribution. Historically, a large proportion of groundwater was extracted for agricultural purposes in the Salinas Valley. The Salinas Valley Groundwater Basin underlies the long linear Salinas Valley, which extends approximately 100 miles from headwaters in the southeast to Monterey Bay in the northwest at Moss Landing.

The relatively flat fertile floodplains along the Salinas River were developed for farming; therefore, wells were drilled to supply water for the agricultural development. The hydrogeologic nomenclature and hydrogeologic conceptual model was initially developed as a result of the subsurface information obtained from the drilling of the wells for agriculture.

The California Department of Water Resources (1946) cites the Eleventh Census for 1890 regarding irrigation in Monterey County:

> *…near the mouth of the Salinas River there were reported to be 60 flowing wells upon farms in 1890 most of them being not far from Castroville. They range in depth from 60 to 189 feet, the average being 136 feet…..They are reported to fluctuate with the season, many of them ceasing to flow in the summer….. At Salinas at about 10 miles from the coast, most deep wells are pumped by windmills.*

This historical description of groundwater use clearly conveys groundwater use in the Salinas Valley started early, and, as is the case for many parts of California, wells were drilled into the shallow upper aquifers first, followed by wells into deeper aquifers as greater quantities of water were required for supply. The flowing wells described in 1890 confirm that these early wells were drilled beneath an upper confining layer. DWR (1946) reports that the number of farms in the Valley increased from 21 farms in 1889 to 803 farms by 1929. In 1933, it was reported "that the quality of water in Salinas Valley as a whole was excellent." However, with the advancement in well pump technology, many new large capacity pumping plants (wells) were brought into use. This resulted in an increasing number of wells being placed out of use from seawater intrusion by 1944. The description of the depths of the wells shows that the upper aquifer within the Salinas Valley was the first to be intruded by seawater, and experienced the furthest migration of seawater with time. Seawater intrusion maps published by the Monterey County Water Resources Agency (MCWRA) support this condition.

The historical conditions are significant to the current project because seawater was introduced into the freshwater aquifers beginning at the coast, with a continuous landward migration. This condition appears to correlate with the lowering of inland groundwater levels induced from agricultural pumping. It is our understanding, that a well at CEMEX has historically been included for monitoring seawater intrusion.

4.2 Groundwater Subbasins

4.2.1 "Pressure" Subarea and 180/400-Foot Aquifer

Both the Moss Landing and CEMEX areas lie within the 180/400-Foot Aquifer Subbasin as delineated by the DWR. DWR Bulletin 118 describes the 180/400-Foot Aquifer Subbasin as follows:

> *180/400-Foot Aquifer – Boundary with Corral de Tierra represents the contact between the Quaternary Paso Robles Formation or Aromas Red Sands and the Quaternary Alluvium or Terrace Deposits. Boundary with Seaside Area Subbasin represents seaward projection of the King City Fault (may act as barrier to flow). Northern boundary is the Pajaro Valley Groundwater Basin and coincides with inland projection of a 400-ft deep, buried clay-filled paleodrainage of the Salinas River. Northeastern boundary generally coincides with the northeastern limit of confining conditions in the 180/400-Foot Aquifer Subbasin and Highway 101. Southeastern boundary is the approximate limit of confining conditions in an up-valley direction. Boundaries generally coincide with those of the Pressure Subarea of MCWRA.*

The 180/400-Foot Aquifer Subbasin is characterized by confined groundwater conditions both historically and as described in DWR Bulletin 118.

The 180/400-Foot Aquifer Subbasin is bounded by groundwater divides on the south by the Seaside and the Corral de Tierra Subbasins.

4.2.2 Seaside and Corral de Tierra Subbasins

The Seaside Subbasin borders the 180/400-Foot Aquifer Subbasin to the south. The Seaside Subbasin is described by DWR as:

> The Seaside Subbasin *"northeast boundary is the Salinas Valley proper (180/400-Foot Aquifer), southeast boundary roughly represents the extent of Quaternary sand."*

The Corral de Tierra Subbasin borders the 180/400-Foot Aquifer Subbasin on the south, further inland than the Seaside Subbasin. The Corral de Tierra Subbasin is described by DWR as:

The Salinas Valley-Corral de Tierra Area Subbasin comprises the eastern portion of the former Fort Ord and other unincorporated areas. The subbasin includes outcrops of Plio-Pleistocene nonmarine units, including the Aromas Sands, the Paso Robles Formation. The subbasin is bounded on the northwest by the Seaside Area subbasin and on the northeast by the 180/400 foot aquifer subbasin. On the south and southwest the subbasin is bounded by Middle Miocene marine rock units, and a portion of the eastern boundary is a small area of Mesozoic granitic rocks (DWR, 2004).

4.4 Regional Geologic Setting

Older geologic maps from the 1970s are available which show the onshore and offshore area of Monterey Bay and the description and distribution of stratigraphic units in the area. Seminal work in evaluating the Quaternary geology in the study area was completed by John Tinsley III and William R. Dupré in 1975 as doctoral dissertations submitted to Stanford University. Both dissertations address the distribution and genesis of Quaternary geologic units in the study area and will be referred to later in this section. More recently, the California Geological Survey published a report in 2002 titled "Geologic Map of the Monterey 30'x 60' Quadrangle and Adjacent Areas". Geologic maps are available at scales ranging from 1:100,000 to 1:24,000. These maps form the basis for the current conceptual model of geologic conditions in the vicinity of the project site. A geologic map of the project area is provided as Figure 6a.

In general, the geologic units mapped at the surface in the study area include, from oldest to youngest:

- Aromas Sand
- Quaternary Marine Terrace Deposits
- Quaternary Terrace Deposits
- Older Dune Sand
- Older Alluvium
- Younger Dune Deposits
- Quaternary Basin Fill Alluvium and Floodplain Deposits

A discussion of geologic units is provided in the following sections.

4.4.1 Aromas Sand (Qar, Qae, and Qaf)

The Aromas Sand designated as Qar (undiffentiated Aromas Sand), Qae (eolian lithofacies of the Aromas Sand) and Qaf (fluvial lithofacies of the Aromas Sand) is present near the study area. The Aromas Sand is early Pleistocene in age and crops out north of the Salinas Valley proper on southwest facing slopes above Castroville. The Aromas Sand in this area is overlain by Older Dune Sand deposits, terrace deposits, the Antioch Alluvial Fan, and the Chualar Alluvial Fan (see Figure 6a). Due to the current uncertainty associated with the location and/or extent of the Aromas Sand in the CEMEX area and the regional dune highlands, the USGS (Tinsley, 2014) recommends using a question mark (?) following the name Aromas to denote that a type section for the units formally designated as the Aromas Sand in the Moss Landing and Watsonville areas has not been established in the area south of the Salinas River and the Aromas (?) unit south of the Salinas River is likely an equivalent unit. The Aromas Sand (?) crops out in the eastern part of the Ford Ord area. The unit in this area is underlain by the Paso Robles Formation and overlain by Older Dune Sand deposits. Overall, the outcrops of the Aromas Sand form an arcuate shape from south of the Salinas River to the north. The unit has been eroded in the Salinas Valley during lowering of sea levels to elevations between -200 and -300 ft amsl (Kennedy/Jenks, 2004) which roughly corresponds with the Wisconsinan sea level lowstand offshore at -300 ft amsl at 17,000 years before present (bp; USGS, 1991). With sea level rise in the Holocene (11,000 years bp), the Salinas River Valley was backfilled with Valley Fill deposits. According to Tinsley, the "Base of Holocene marine transgression at this locality (Leonardini Well) occurs at approximately 150 ft below mean sea level (-150 ft above mean sea level, amsl)."

4.4.2 Quaternary Marine Terrace Deposits (Qmt)

According to Dupré, marine terraces flank both the northern and southern margins of Monterey Bay. They formed in response to glacioeustatic fluctuations in sea level. The youngest terraces in the Santa Cruz area were formed during the Sangamon sea level highstands (at 102,000 and 118,000 years bp; Dupré, 1990). Quaternary Marine Terraces are mapped near Moss Landing (see Figure 6a and Figure 8) and north of Elkhorn Slough.

4.4.3 Quaternary Terrace Deposits (Qt)

Terrace deposits are present along and elevated above the Salinas River floodplain. The terrace deposits represent former alluvial fan and river floodplain surfaces, and range in age from early to mid-Pleistocene. Terrace surfaces and their relative stratigraphic positions were mapped by Tinsley (1975) using soil stratigraphic methods. The stratigraphic positions of the terraces associated with the alluvial fans in the northern Salinas Valley were used to interpret the stratigraphic relationships shown on Figure 8. According to Tinsley a distinguishing feature of the Salinas River deposits originating from below the Arroyo Seco drainage which enters the Salinas Valley approximately 40 miles upstream from

the south, is an abundance of porcellaneous chert from the Monterey Formation. The clast type can occur both in older terrace deposits (Tinsley, 2014) as well as younger fluvial deposits which lie beneath the Salinas Valley.

4.4.4 Older Dune Sand (Qod)

The Older Dune Sand (late Pleistocene) is also present in project area. These deposits are much more extensive in the project area south of the Salinas River Valley, extending inland as far as the East Garrison of former Fort Ord (approximately 5 miles inland). However, north of the Salinas River, the Older Dune Sand is limited in extent and crops out in small non-contiguous areas. Further north, nearing the Watsonville area, Older Dune Sand deposits are again extensive, occupying much of the coastal areas. Work completed by Dupré (1975) included study of the Manressa and Sunset Dunes, which are the coastal dunes located north of the Salinas River in the Watsonville area. These dunes are similar to what is called the Fort Ord ERG Dune Complex present in the CEMEX and Fort Ord areas. The term "ERG" is used to describe the landform which is made up of a large dune field. The Older Dune Sand deposits in the Fort Ord area are reported to be as much as 250 ft thick (HLA, 2001). The Dupré work has shown that the Older Dune Sand deposits rest on top of terrace deposits (Santa Cruz Terrace).

Dupré (1975) reports:

> *The Manressa Coastal Dunes conformably overlie the Santa Cruz coastal terrace deposits, hence were deposited during lowering sea level…The Manressa dunes are probably late Sangamonian/early Wisconsinan. The Sunset Dunes are similar in form and probably in origin to the Manressa Dunes, thus they record an interval of dropping sea level following a mid-wisconsinan interstadial highstand.*

Dupré notes that the Older Dune Sand deposits (in the Watsonville area) were deposited during a lowering of sea level between the interglacial Sangamon sea level highstand (125,000 - 85,000 years bp) and glacial Wisconsinan sea level lowstand (85,000 - 11,000 years bp). The current Holocene (11,000 years bp to present) represents the most recent interglacial period.

4.4.5 Older Alluvium (Qo)

Older alluvial deposits are not mapped at the surface in the study area, but underlie the Holocene deposits in the Salinas River Valley. These deposits are late Pleistocene and are likely in erosional contact with terrace deposits. The Older Alluvium contains organic "blue clay" horizons located beneath the Holocene floodplain of the Salinas River, and is typically referred to as the Salinas Valley Aquitard (SVA). According to Tinsley (1975), the presence of this "blue clay" indicates that shallow marine to

brackish water estuarine environments prevailed during the deposition of the horizons, forming the principle aquicludes and aquitards in the 180/400 Foot Aquifer Subbasin.

4.4.6 Younger Dune Deposits (Qd)

Younger dune and beach sand deposits extend along the shoreline of Monterey Bay from the southern end of the Bay, northward to Moss Landing. The deposits are absent in the immediate vicinity of the mouth of the Salinas River (USGS Open File Report 02-373). The dune sand deposits extend landward approximately 0.1 to 0.5 miles inland. The Younger Dune Sand is Holocene in age and overlies older Dune Sand south of the Salinas River and older alluvial deposits along the mouth of the Salinas River Valley. It is likely that the recent dune sand rests over fluvial deposits (which form a shallow aquifer) in the area where the Salinas River Valley meets the ocean. However, to the south of the Salinas River Valley near the community of Marina and Fort Ord, the recent dune sand directly overlies older dune sand deposits.

4.4.7 Quaternary Basin Fill (Qb) Alluvium (Q) and Floodplain Deposits (Qfl)

The Quaternary basin fill, alluvium, and floodplain deposits are Holocene in age, consisting of sedimentary material deposited by the Salinas River and/or its tributaries. These units are mapped within the central portion of the Salinas Valley.

4.5 Local Geology

4.5.1 CEMEX Area

In the CEMEX area, younger and older dune deposits overlie Quaternary terrace deposits. The area is within the western edge of the Older Dune Complex, which is bounded by the Salinas River Valley to the north and extends from the coast to a maximum distance of five miles inland (see Figure 6a). The CEMEX area has been dominated by eolian (wind blown) depositional processes, while the Salinas River Valley is dominated by riverine fluvial depositional processes. The CEMEX area represents a distinct geomorphic area from the Salinas River Valley.

The concept of the formation of coastal dunes during the lowering of sea level as reported by Dupré (1975) suggests that the Older Dune deposits are either equivalent in age or older than the sand, silt, and gravel which form the 180-Foot Aquifer in the Salinas Valley to the north. These fluvial deposits which make up the 180-Foot Aquifer deposits were laid down as the Salinas River Valley degraded its channel during Wisconsinan time. The 180-Foot Aquifer was subsequently capped as sea levels rose at the beginning of the Holocene, forming an estuary and the SVA. The geologic units which form the 180-Foot Aquifer are stratigraphically equivalent but chronologically younger than the terrace deposits which underlie the Older Dune deposits at the CEMEX site.

DWR (2004) notes the "180-Foot Aquifer may in part be correlative to older portions of Quaternary terrace deposits or the upper Aromas Sand". Cross-Section 1-1' (Figure 7a) depicts the relationship between the geologic units that make up the 180-Foot Aquifer present beneath the Salinas Valley and the stratigraphic units encountered in the CEMEX boreholes. The degree of hydraulic connection will be initially evaluated using the CM and the NMGWM but, more significantly, will be field investigated with the test slant well program.

4.5.1.1 Findings from CEMEX Boreholes

Four boreholes were drilled to depths between 306 and 350 ft bgs. The locations are shown on Figure 3. Boring CX-B1 was located closest to the ocean. Boring CX-B2 was located 600 ft inland from CX-B1 along the CEMEX haul road. Boring CX-B3 was located near the CEMEX maintenance shop approximately 1,800 feet from Boring CX-B1, and CX-B4 is located 500 feet east of CX-B3 and approximately 2,700 feet from the shoreline. Lithologic units were found to be similar in all four borings (see boring logs in Appendix A1). The table below summarizes the geologic units encountered in the CEMEX borings CX-B1, CX-B2, CX-B3, and CX-B4.

Table 4-1. Depths of Geologic Units in CEMEX Borings (ft bgs)

Depths of Geologic Units in CEMEX Borings (ft bgs)				
Geologic Unit	Borehole			
	CX-B1	CX-B2	CX-B3	CX-B4
Qd	0-25	0-28	0-20	0-27
Qod	25-85	28-90	20-90	27-95
Qt	85-245	90-240	90-253	95-255
Qar	below 265	below 270	below 287	below 292

Geologic Cross-Section 1-1' (Figure 7a) illustrates the extent of the geologic units in the subsurface and indicates the hydrostratigraphic units associated with each geologic unit. Figure 7b is a close up in the CEMEX area.

4.5.2 Moss Landing Area

The investigation at Moss Landing is inclusive of the area from the Salinas River State Beach Molera parking Lot at Monterey Dunes Way (Boring MDW-1) to the Monterey Bay Aquarium Research Institute (MBARI) located at the northern terminal end of Sandholt Road (Boring ML-6). The geologic units include Younger Dune Deposits (Qd), recent alluvium (Qal), and basin fill deposits (Qb) near the coast. The area around the Pacific Coast Highway is underlain by Older Dune Deposits (Qod) and Quaternary Marine Terrace Deposits (Qmt). Further to the northeast, as land surface elevation increase, the alluvial

fan deposits (Qfa) predominate and are underlain by the Aromas Sand (Qar) which crops out near Elkhorn and Prunedale. The distribution of surface geologic units is shown on Figure 6a.

4.5.2.1 Findings from Moss Landing Boreholes

A total of seven exploratory borings were drilled at the Moss Landing study area. The locations of all of the borings are shown on Figure 2. The five borings drilled in Moss Landing Harbor are shown on Figure 4. Lithologic logs of the borings are presented in Appendix A1. Geologic Cross-Sections 2-2' and 3-3' provided as Figure 8 and Figure 9, respectively, depict the geologic relationships in the Moss Landing area. Cross-Section 2-2' shows Pleistocene Alluvial Fan deposits overlain by Quaternary Marine Terrace Deposits, and in erosional contact with Older Alluvium which contains the 180-Foot Aquifer and the Perched "A" Aquifer. The Older Alluvial deposits are interpreted to extend seaward and be exposed in the walls of Monterey Canyon to the west.

Cross-Section 3-3' parallels the coast extending from the City of Marina to Moss Landing Harbor, and depicts mixed units of sand, silt, clay, and gravel which do not appear to be laterally or vertically extensive. The sand and gravel units encountered in Boring PR-1 showed the greatest thickness (99 ft) of permeable alluvium. The unit appears to decrease in thickness to the south and pinch out south of Boring MDW-1. Deposits interpreted as the SVA were penetrated in Boreholes MDW-1, PR-1, and ML-1 (see Figure 9). Figure 4-1 (Tinsley, 1975) provides a schematic depicting the relationship between the Pleistocene alluvial deposits and the alluvium which contains the SVA and 180-Foot Aquifer beneath the Salinas Valley near Salinas.

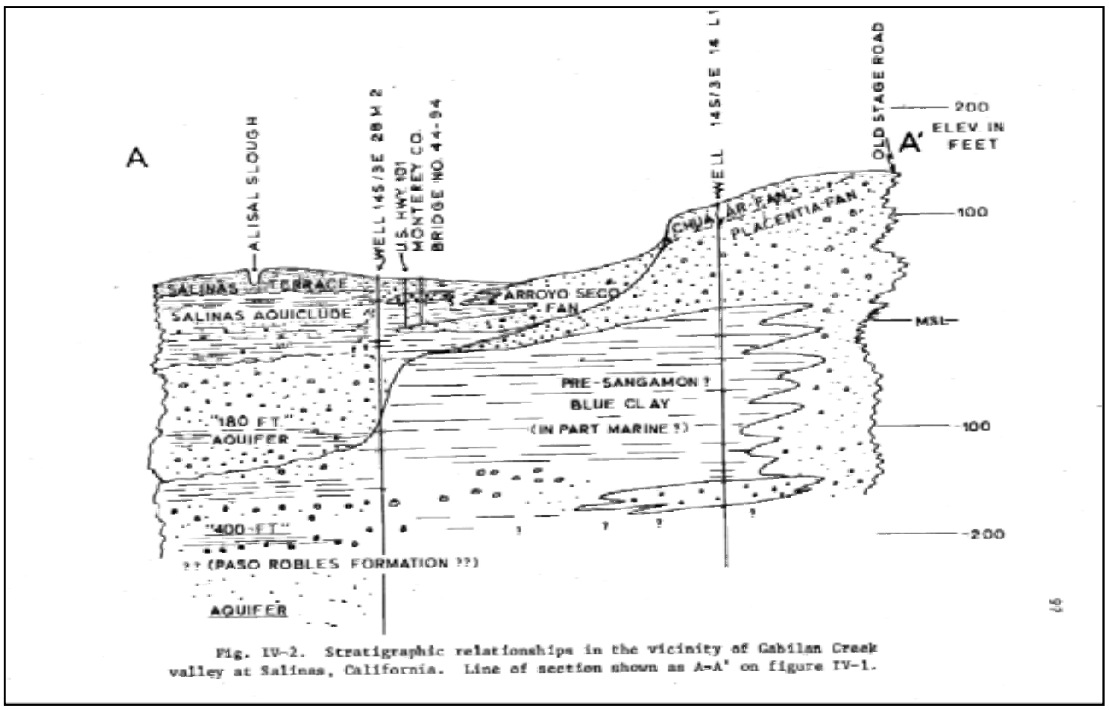

Fig. IV-2. Stratigraphic relationships in the vicinity of Gabilan Creek valley at Salinas, California. Line of section shown as A-A' on figure IV-1.

Figure 4-1. Reproduced from Figure IV-2 of Tinsley, 1975

4.6 Hydrostratigraphy

Traditionally, aquifers in the Salinas Valley Groundwater Basin have been named for the average depth at which they occur (e.g., 180-Foot Aquifer). Water-bearing materials in the area, from oldest to youngest, consist of the Pliocene marine Purisima Formation, Plio-Pleistocene Paso Robles Formation, Pleistocene Aromas Sands, and Holocene Valley Fill materials (Greene, 1970).

Table 4-2 below provides a correlation of surface mapped geologic units shown on Figure 6a and the hydrostratigraphic unit associated with the geologic unit. These units correlate with the CM and NMGWM, and are discussed in Section 6.

Table 4-2. Correlation of Geologic and Hydrostratigraphic Units

180/400-Foot Aquifer Subbasin			CEMEX Area		
Geologic Unit	**Geologic Unit Map Symbol**	**Hydrostratigraphic Units**	**Geologic Units**	**Geologic Unit Map Symbol**	**Hydrostratigraphic Units**
Benthic Zone	--	Benthic Zone	Benthic Zone	--	Benthic Zone
Alluvium	Qal[1]	Perched "A" Aquifer	Dune Sand	Qd	Dune Sand Aquifer
			Older Dune Sand	Qod	
Older Alluvium	Qo	Salinas Valley Aquitard	Older Terrace/ Marine Terrace	Qt (Qmt?)	180-FTE[2]
Older Alluvium/ Marine Terrace	Qo/Qmt	180-Foot Aquifer			
Older Alluvium/ Older	Qo/Qfa				
Older Alluvial Fan – Placentia	Qfp	180/400-Foot Aquitard	Aromas Sand (undifferentiated) (?)	Qar (?)	180/400-Foot Aquitard
Aromas Sand (undifferentiated)	Qar	400-Foot Aquifer			400-Foot Aquifer
Aromas Sand – Eolian/ Fluvial Lithofacies	Qae/Qaf				
Paso Robles Formation	QT	400/900-Foot Aquitard	Paso Robles Formation	QT	400/900-Foot Aquitard
		900-Foot Aquifer			900-Foot Aquifer

[1]Subsurface Holocene geologic unit not mapped at surface

[2] See Section 4.6.4

In the 180/400-Foot Aquifer Subbasin, the aquifer units from oldest to youngest include the 900-Foot Aquifer, 400-Foot Aquifer (generally thought to be contained in the upper part of the Aromas Sand), and the 180-Foot Aquifer present with the Older Alluvium and separated from the overlying Perched "A" Aquifer by the Salinas Valley Aquitard. Thicknesses of individual aquifer units vary in previous work by others. For example, Table 4-3 below provides the estimated thickness of the 180-Foot Aquifer suggested by the work of previous investigators. The information summarized in the Table 4-3 below indicates that identifying the elevation range and thickness of the 180-Foot Aquifer varies and depends on the specific investigator and location.

Table 4-3. Previous Estimates of Thickness and Elevation Ranges for the 180-Foot Aquifer

Previous Investigator	180-Foot Aquifer Near CEMEX	
	Thickness (ft)	Elevation Range (ft amsl)
Greene, 1970	50-250	20 to -220
DWR, 1973	50-150	0 to -300
Tinsley, 1975	100-150	Base of aquifer at -150
Staal, Gardner, Dunne*, 1991	Not reported	Top of aquifer at -110
Fugro West, 1996*	Not reported	Top of aquifer at -135
Harding ESE, 2001	Combines Dune Sand with 180-Foot Aquifer	Base of aquifer at -250
Kennedy Jenks, 2004	100	-100 to -180

* The depth to the 180-Foot Aquifer was determined for a site south of CEMEX.

4.6.1 900-Foot Aquifer

The 900-Foot Aquifer is contained within the Plio-Pleistocene Paso Robles Formation. HLA (2001) notes that the 900-Foot Aquifer is part of a "Deep" aquifer system, which also includes what has been called the 800-Foot, 1,000-Foot, and 1,500-Foot Aquifers. For purposes of groundwater modeling, these aquifers will be collectively termed and simulated as the 900-Foot Aquifer.

4.6.2 400-Foot Aquifer

Within the project area, the 400-Foot Aquifer is the aquifer unit which is contained in the upper and lower portions of the Aromas Sand (USGS, 2003). The thickness of the unit has been reported to be approximately 200 ft (HLA, 2001) but may be as thick as 500 feet (USGS, 2003). The unit is separated from the overlying 180-Foot Aquifer by zones of discontinuous aquifers and aquitards which are approximately 10 to 70 ft thick. The aquitards in this area have been designated as the 180/400-Foot Aquitard.

4.6.3 180-Foot Aquifer

As noted previously, the 180-Foot Aquifer has various reported thicknesses. The aquifer is separated from the overlying Perched "A" Aquifer by the SVA. DWR (2003) states that the 180-Foot Aquifer may, in part, be correlative to older portions of Quaternary Terrace Deposits or the upper Aromas Sand. Work completed for this study suggests that the 180-Foot Aquifer is correlative with terrace deposits of Quaternary age that are older but in erosional contact with younger Salinas River fluvial deposits containing the 180-Foot Aquifer in the Salinas Valley.

According to Tinsley (1975), "extrapolation of the stratigraphic position of the 180-Foot Aquifer offshore shows that it lies within the seismic unit which represents the deltaic deposits" reported by Greene in 1970. The work prepared by Greene suggested approximately 200 ft (60m) to 280 ft (85m) (maximum) thickness of the Holocene deltaic deposits. Tinsley (1975) reported that foraminera[5] from data collected from the water well cuttings suggested that there is 200 ft (60m) to 250 ft (75m) of Holocene sediments near the coast in the southern Salinas River Valley, which correlates well with the work by Greene. However, more recent work by Chin (USGS, 1988) using seismic methods suggests that the offshore Holocene Deltaic deposits are about 70 ft in thickness.

4.6.3.1 Historical Approaches for Identifying the 180-Foot Aquifer

The 180-Foot Aquifer has been historically defined using four separate approaches. The four approaches are: tradition, facies, groundwater flow system, and institutional. A brief description of the approaches applied to water bearing deposits encountered below the Dune Sand at CEMEX is provided below.

Tradition: Traditionally, the 180-Foot Aquifer has been described in narrative, map, and cross-sectional formats. While the descriptions differ among various authors, generally the 180-Foot Aquifer is described as resting beneath the SVA at an average depth of 180 ft bgs, extending offshore, and cropping out on the floor of Monterey Bay. The mapping of seawater intrusion by the MCWRA represents an implied extent of the traditional 180-Foot and 400-Foot Aquifers. At CEMEX, the terrace deposits which underlie dune sand are not capped by the SVA and therefore do not match the traditional description of the 180-Foot Aquifer.

Facies: Some authors have defined the 180-Foot Aquifer in terms of facies. According to Reading (1996) "a facies is a distinctive rock unit that forms under certain conditions of sedimentation, reflecting a particular process or environment." Authors who have described the 180-Foot Aquifer as a sedimentary facies have associated the 180-Foot Aquifer with Salinas River fluvial deposits which were deposited in the pre-Holocene Salinas Valley. Some authors have extended the 180-Foot Aquifer across facies changes.

A "facies change" is a lateral or vertical variation in lithologic or paleontologic characteristics of contemporaneous sedimentary deposits. It is caused by, or reflects, a change in depositional environment" (Neuendorf et al., 2005). For example, in a fluvial system, the center of a river channel may contain sand and gravel while the edges of the river may contain silt and clay deposited in quiet water conditions. A facies change, or change in the sedimentary environment, occurs within the same

[5] Foraminifera (foraminifers or, informally, just forams) are single-celled organisms (amoeboid protists) with shells (plankton).

time-stratigraphic unit. Therefore, including various facies changes in the 180-Foot Aquifer is appropriate. The terrace deposits which underlie the CEMEX property are not a facies change within the fluvial sediments which contain the 180-Foot Aquifer since they represent a different time-stratigraphic unit. The terrace deposits are older and are in erosional contact within the various fluvial facies which contain the 180-Foot Aquifer.

Groundwater-flow system: Under pre-development conditions, groundwater flowed horizontally toward Monterey Bay both within the Salinas Valley and within the Dune Highland area in the vicinity of CEMEX. Under post-development conditions, a reversal in groundwater gradient has resulted in groundwater flowing from Monterey Bay inland, causing seawater intrusion. The groundwater flow systems will cross different facies as well as different time-stratigraphic units. The terrace deposits are likely in hydraulic continuity with the 180-Foot Aquifer. Therefore, groundwater flow will occur across the erosional contact from the 180-Foot Aquifer into the terrace deposits (referred to here as the 180-Foot Equivalent Aquifer, or 180-FTE Aquifer) and vice-versa. The degree of flow between the aquifers will be assessed during the test slant well program.

Institutional: The boundaries of the 180-Foot Aquifer may be defined or implied by legislation or ordinances. It is duly recognized that institutional boundaries have been prepared based on the historical conceptual models of the regional hydrogeology and based on the historical data available. For purposes of this document, the alluvial materials encountered near the coast (in the CEMEX area) are based solely on analyses of borehole samples (and geophysical borehole logs). As of yet, no direct correlation can be made between these coastal alluvial deposits and the standard naming convention found further inland (e.g., 180-Foot Aquifer, 400-Foot Aquifer, SVA, etc.). Therefore, in this document, the upper materials have been classified as the Dune Sand Aquifer and the alluvial materials below have been referred to as stratigraphically equivalent to the inland 180-Foot Aquifer (or 180-FTE Aquifer) and should not be construed to alter institutional interpretations.

4.6.4 180-Foot Equivalent Aquifer (Terrace Deposits)

The terrace deposits are water bearing materials beneath the Dune Sand Aquifer in the CEMEX area. The terrace deposits are approximately 160 ft thick at the CEMEX site, thinning seaward. Hydraulic conductivity values are lower than those attributed to the 180-Foot Aquifer. Based on the data collected in this study, the terrace deposits are interpreted to be stratigraphically equivalent to the 180-Foot Aquifer of the Salinas Valley, and may likely be in hydraulic continuity with the 180-Foot Aquifer. Therefore, for the purposes of this investigation, the aquifer interval within the terrace deposits is referred to as 180-Foot Equivalent (180-FTE) Aquifer. The 180-FTE Aquifer is believed to be in hydraulic continuity with the overlying Dune Sand Aquifer; both units extend seaward beneath Monterey Bay and have similar water quality.

4.6.5 Salinas Valley Aquitard

The SVA consists of discontinuous layers of clays ranging in thickness from 0 to 100 ft. It defines the Pressure Area from Chualar to the coast. In the inland areas, the SVA is generally present overlying the 180-Foot Aquifer, separating the 180-Foot Aquifer from the Perched "A" Aquifer (discussed below). The SVA is present beneath the Moss Landing area but not beneath the CEMEX site.

4.6.6 Dune Sand Aquifer

The Dune Sand Aquifer is present beneath the CEMEX site and represents the water bearing units of both the Younger and Older Dune Sand. Based on groundwater quality data collected at the CEMEX site, and the absence of the SVA, the groundwater in the Dune Sand Aquifer is believed to be hydraulically connected to the underlying 180-FTE Aquifer (terrace deposits). The high salinity suggests that the Dune Sand Aquifer is also connected to the ocean. According to HLA (2001), the Dune Sand Aquifer is hydrostratigraphically equivalent to the Perched "A" Aquifer. Work completed by Emcon (1991) for the Marina Peninsula Class III Landfill suggests that there are multiple perched aquifers within the Older Dune Sand. The aquifer designated as the -2 Foot Aquifer at the landfill appears to correlate with the Perched "A" Aquifer of the Salinas Valley. Recent groundwater levels for the -2 Foot Aquifer are shown on Cross-Section 1-1' (Figure 7a).

4.6.7 Perched "A" Aquifer

The Perched "A" Aquifer is found within the Salinas Valley overlying the SVA. According to HLA (2001), an equivalent unit designated as the "A-aquifer" is found exclusively in the Older Dune Sand beneath the former Fort Ord. This relationship further suggests that groundwater within the Perched "A" Aquifer in the Salinas Valley may be hydraulically connected to the groundwater found in the Older Dune Sand.

4.7 Hydrostratigraphic Interpretation of CEMEX Borehole Data

The CEMEX borings encountered groundwater from slightly below ground surface to the bottom of each borehole. The Dune Sand Aquifer is present to a depth of approximately 90 ft bgs. Groundwater quality data indicates that TDS concentrations for the Dune Sand Aquifer range from approximately 4,800 mg/L inland to 27,000 mg/L near the ocean.

Terrace deposits in the 180-FTE Aquifer underlie the Dune Sand Aquifer and consist of a range of fluvial lithologic units, including thin gravel channels and laminated silt and very fine sand deposits. The base of the terrace deposits appears to be marked by a transition to thicker clay units (10-15 ft thick) with interbedded sand and gravel units (about 10-ft thick) above a distinct "blue" clay layer. TDS concentrations in this unit vary from 16,000 mg/L to near sea water (32,000 mg/L). TDS concentrations

in the terrace deposits appear to be similar to those in the Dune Sand Aquifer. The high and low values of TDS appear to represent groundwater within more isolated channels and lenses within the unit.

The units below the "blue" clay[6] are interpreted to be the 400-Foot Aquifer within the Aromas Sand. TDS concentrations obtained from two isolated zones in this aquifer were approximately 25,000 mg/L to 30,000 mg/L. Table 4-4 below provides a summary of water quality by geologic unit. The TDS concentrations with depth and by geologic unit are shown on Figures 7a and 7b. A detailed discussion of groundwater quality is provided in Section 5.

Table 4-4. Summary of Laboratory Water Quality Results from Boreholes at CEMEX

TDS Concentrations by Zone	Borehole CX-B1 WQ					
	Zone 1	Zone 2	Zone 3	Zone 4	Zone 5	Zone 6
Depth (ft bgs)	274-284	237-247	182-192	134-144	84-94	51-61
TDS (mg/L)	**25,200**	**14,600**	**35,600**	**26,500**	**27,400**	**24,800**
TDS Concentrations by Zone	Borehole CX-B2 WQ					
	Zone 1	Zone 2	Zone 3	Zone 4		
Depth (ft bgs)	215-225	160.5-170.5	104-114	55-65		
TDS (mg/L)	**26,500**	**16,200**	**26,800**	**26,700**		
TDS Concentrations by Zone	Borehole CX-B4					
	Zone 1	Zone 2	Zone 3	Zone 4	Zone 5	
Depth (ft bgs)	306-316	248-258	155-165	110-120	58-68	
TDS (mg/L)	**29,800**	**27,200**	**20,500**	**24,000**	**4,815**	

4.8 Hydrostratigraphic Interpretation of Moss Landing Boreholes Data

A total of seven borings were drilled in the Moss Landing study area. Figure 8 and Figure 9 are geologic cross-sections constructed from borehole data, and were used to interpret the subsurface stratigraphic and hydrostratigraphic relationships in the Moss Landing area. Cross-Section 2-2' is drawn perpendicular to the shoreline and makes use of the lithologic log from Boring PR-1 and mapped surface geology. The geologic relationships depicted include recent alluvium and older alluvium containing the

[6] The "blue clay" refers to a distinct lithologic unit encountered in CEMEX borings that was dark greenish gray, a Munsell color of 5GY 3/1. Munsell soil color charts are commonly used in the industry to describe soil colors.

Perched "A" Aquifer, SVA, and the 180-Foot Aquifer present beneath the Salinas River in erosional contact with older alluvial fan deposits located on the northern portion of the Salinas Valley. This relationship was reported by Tinsley (1975) for the area around Salinas and indicates that the aquifers in the Salinas Valley may be in hydraulic connection with groundwater in terrace and alluvial fan deposits. The older alluvial deposits and alluvial fan deposits overlie the Aromas Sand which contains the 400-Foot Aquifer.

Cross-Section 3-3' is drawn parallel to the shoreline and extends from Moss Landing south to the City of Marina. Cross Section 3-3' makes use of the lithologic logs from Boreholes MDW-1, PR-1, ML-1, ML-2, and ML-6. Further south, borehole information from previous studies and driller's logs and data recently collected from CEMEX were used to construct the cross-section. The cross-section depicts a thicker sequence of recent alluvium consisting of permeable sand and gravel material present at depths between 58 ft and 139 ft bgs in PR-1. In the Moss Landing area, the recent alluvium is interbedded with silt, silty sand, and clay. To the south of Boring PR-1, the permeable deposits encountered in Boring PR-1 decrease in thickness and pinch out and the Older Alluvium which contains the SVA and the 180-Foot Aquifer is in erosional contact with the terrace deposits. The alluvial deposits are channel and floodplain deposits near the mouth of the Salinas River. The alluvium is underlain by older alluvium which contains the SVA, and the underlying 180-Foot Aquifer. The 180-Foot Aquifer is cut off to the north by clay gorge fill reported by DWR (1973) associated with Elkhorn Slough.

Table 4-5 below summarizes basic groundwater quality data for the Moss Landing borings. The zones above approximately 100 ft bgs had TDS concentrations ranging from freshwater (423 mg/L) to near seawater (29,000 mg/L). Borings ML-2, ML-3 ML-4 contained brackish water (approximately 5,000 mg/L to 9,000 mg/L). With the exception of Zone 1 from ML-3, the lower zones consistently contained high TDS concentrations ranging from approximately 19,000 mg/L to 34,000 mg/L (ML-6). A detailed discussion of groundwater quality is provided in Section 5.

Table 4-5. Summary of Laboratory Water Quality Results from the Moss Landing Borings

Water Quality Parameters	MDW-1				PR-1		ML-1	
	Zone 1	Zone 2	Zone 3	Zone 4	Zone 1	Zone 2	Zone 1	Zone 2
Depth (ft bgs)	237-247	187-197	152-162	60-70	190-200	125-135	113.5-118.5	90-100
TDS (mg/L)	**31,000**	**30,200**	**26,600**	**21,900**	**630**	**34,000**	**22,000**	**3,200**
Water Quality Parameters	ML-2		ML-3		ML-4		ML-6	
	Zone 1	Zone 2	Zone 1	Zone 2	Zone 1	Zone 2	Zone 1	Zone 2
Depth (ft bgs)	167-177	90-100	180-190	103-113	163.5-173.5	74.5-84.5	152-162	100-110
TDS (mg/L)	**19,000**	**8,100**	**7,400**	**4,200**	**21,000**	**8,600**	**34,000**	**28,000**

4.9 Updated Conceptual Model

The geologic and hydrogeologic data collected during this investigation was used to prepare the interpretations of hydrostratigraphic relationships in the Moss Landing and CEMEX areas. A conceptual model of the hydrostratigraphic units in the Moss Landing to CEMEX area as interpreted from data collected from this investigation is shown on Figure 4-2.

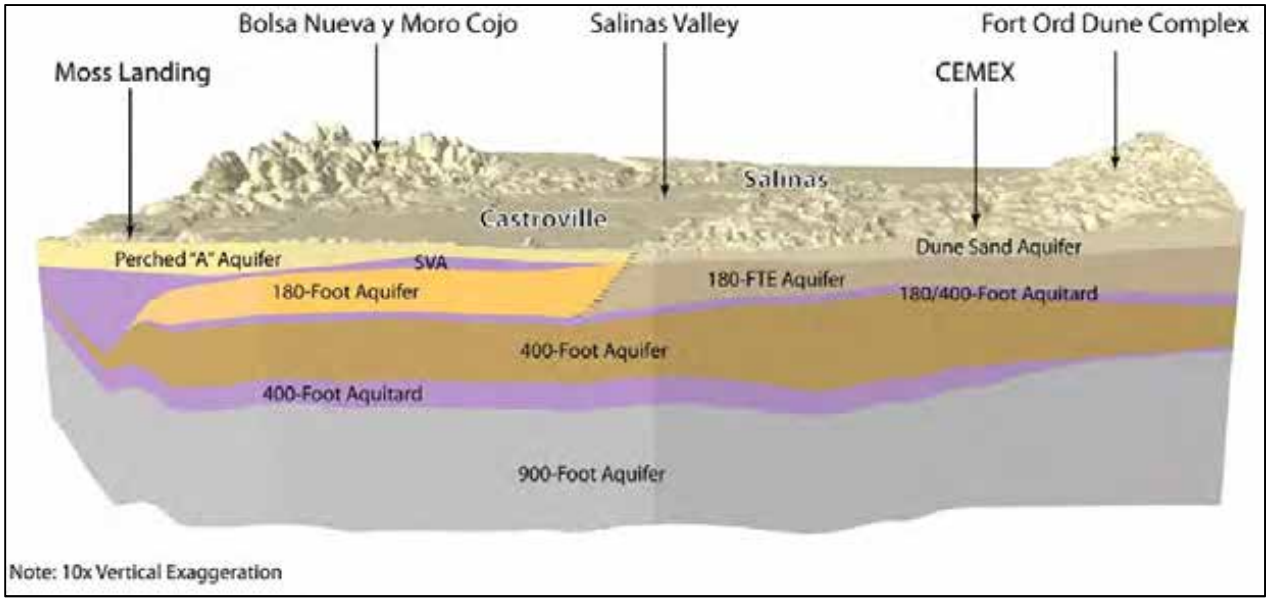

Figure 4-2. Hydrostratigraphic Model Moss Landing to CEMEX Area

5.0 GROUNDWATER QUALITY

5.1 General

5.1.1 Groundwater Levels

Groundwater was encountered in all of the borings drilled during this investigation. Groundwater levels were not established with certainty during this investigation. The groundwater level was measured in the well casing after aquifer zone testing if the zone was left over night to allow full recovery after pumping. In some cases, the zones were removed at the end of pumping to allow for construction of a subsequent zone or for borehole destruction to move the drilling rig to the next location. The installation of permanent monitoring wells during the next phase of investigation will allow an accurate evaluation of groundwater elevations. Table 5-1 below provides groundwater level measurements (depth in ft, bgs) from most of the zones. These are provided as an estimate of depth to water encountered in the temporary well (zone) but may vary with tidal influences or seasonally. In general, the depth to water measured in the boreholes reflects a groundwater surface elevation at or near sea level.

Table 5-1. Depth to Water from Isolated Aquifer Test Zones

	Depth to Water (ft bgs)					
Borehole	**Zone 1**	**Zone 2**	**Zone 3**	**Zone 4**	**Zone 5**	**Zone 6**
Moss Landing						
PR-1	-	-				
ML-1		3.6				
ML-2	3.3	1.6				
ML-3	12.57	10.86				
ML-4	28.68					
ML-6	8.09	9.58				
MDW-1	20.8	19.2	20.9	14.65		
CEMEX						
CX-B1WQ	26		19.53	21.5	19.3	19.9
CX-B2WQ	28.4	26.31	24.3	24.7		

5.1.2 Groundwater Sampling and Analysis

Groundwater samples collected from the isolated aquifer zone tests were submitted for laboratory analysis. Table 5-2 lists the suite of analyses conducted on each sample. The results of the water quality and age dating analyses will partially form the basis for the interpretations of the hydrogeology in the study area discussed in the sections below. The laboratory analytical data are summarized in Table 3a

and Table 3b. Copies of the field data sheets used to record field parameters during zone testing are provided in Appendix G.

Table 5-2. Water Quality Analyses for Exploratory Boreholes

Constituent	Units	Method Reporting Limit	Method
Physical Properties			
Color	Color Units	3	SM 2120B/EPA 110.2
Odor	T.O.N.		EPA 140.1
Oxidation-Reduction Potential (Field)	mV	-	Field Meter - Myron L 6PII
pH (Lab)	Units	0.1	SM 4500 H+B
pH (Field)	Units	-	Field Meter - YSI Pro Plus
Turbidity (Laboratory)	NTU	0.2	EPA 180.1/SM 2130B
Turbidity (Field)	NTU	-	Field Meter - Hach 2100P
Temperature (Field)	°C	-	Field Meter - YSI Pro Plus
Dissolved Oxygen (Field)	mg/L	-	Field Meter - YSI Pro Plus
Silt Density Index (Field)	-	-	ASTM D4189-07
Threshold Odor Number	T.O.N.	1	EPA 140.1/SM 2150
Total Dissolved Solids (Lab)	mg/L	10	SM 2540 C
Total Dissolved Solids (Field)	mg/L	-	Field Meter - YSI Pro Plus
Specific Conductance (Lab)	µmhos/cm	1	SM 2510 B
Specific Conductance (Field)	µS/cm	-	Field Meter - YSI Pro Plus
General Minerals			
Total Cations	meq/L	-	Calculation
Total Anions	meq/L	-	Calculation
Alkalinity as $CaCO_3$	mg/L	3	SM 2320 B
Bicarbonate Alkalinity as HCO_3	mg/L	3	SM 2320 B
Carbonate Alkalinity as $CaCO_3$	mg/L	3	SM 2320 B
Hydroxide Alkalinity as $CaCO_3$	mg/L	3	SM 2320 B
Total Hardness as $CaCO_3$	mg/L	3	Calculation
Aluminum	µg/L	1	EPA 200.7
Arsenic	µg/L	1	EPA 200.7 / EPA 200.8
Barium, Dissolved	µg/L	0.01	EPA 200.7
Boron, Dissolved	µg/L	0.5	EPA 200.8

Bromide, Dissolved	mg/L	0.1	EPA 326.0
Calcium, Dissolved	mg/L	1	EPA 200.7
Chloride, Dissolved	mg/L	1	EPA 300.0
Copper, Total	µg/L	50	EPA 200.7
Fluoride, Dissolved	mg/L	0.1	EPA 300.0 / SM 4500 FC
Iodide, Dissolved	mg/L	0.1	USGS I-2371 / EPA 9056A
Iron, Dissolved	µg/L	100	EPA 200.7 / EPA 200.8
Iron, Total	µg/L	100	EPA 200.7 / EPA 200.8
Lithium	µg/L	10	EPA 200.7 / EPA 6010B
Magnesium, Dissolved	mg/L	1	EPA 200.7
Manganese, Dissolved	µg/L	20	EPA 200.7 / EPA 200.8
Manganese, Total	µg/L	20	EPA 200.7 / EPA 200.8
MBAS	mg/L	0.05	SM 5540 C / EPA 200.8
Nitrogen, Nitrate as NO_3	mg/L	1	EPA 353.2 / EPA 300.0
Nitrogen, Nitrite, Dissolved	mg/L as N	1	SM 4500 NO_2B
Nitrogen, NO_2 + NO_3	mg/L as N	1	EPA 300.0
Nitrogen, Ammonia, Dissolved	mg/L as N	0.1	SM 4500 NH_3H / EPA 350.1
Nitrogen, Ammonia + Organic, Diss. (TKN)	mg/L as N	0.1	EPA 351.2
Phosphorus, Dissolved	mg/L as P	0.01	EPA 365.3
Phosphorus, ortho, Dissolved	mg/L as P	0.01	EPA 365.3
Potassium, Dissolved	mg/L	1	EPA 200.7
Silica, Dissolved	mg/L	1	SM 4500 SiE
Sodium, Dissolved	mg/L	1	EPA 200.7
Strontium, Dissolved	mg/L	0.1	EPA 200.7 / EPA 200.8
Sulfate as SO_4, dissolved	mg/L	0.5	EPA 300.0
Zinc, Total	µg/L	50	EPA 200.7
Radiology / Age Dating Methods			
Delta-Deuterium	δ^2H	-	TC/EA/IRMS
Delta Oxygen-18	$\delta^{18}O$	-	TC/EA/IRMS
Tritium	TU	-	-
Tritium, prec. est.	TU	-	-
Volatile Organic Compounds			
VOCs plus Oxygenates (MTBE)	µg/L	varies	EPA 524.2
EPA Organic Methods			
EDB and DBCP	µg/L	varies	EPA 504.1
Chlorinated Pesticides & PCB's as DCP	µg/L	varies	EPA 508
Chlorinated Acid Herbicides	µg/L	varies	EPA 515
Nitrogen & Phosphorus Pesticides DEHP, DEHA, Benzo(a)Pyrene	µg/L	varies	EPA 525

Carbamates	µg/L	varies	EPA 531.1
Glyphosate	µg/L	varies	EPA 547
Endothall	µg/L	varies	EPA 548.1
Diquat	µg/L	varies	EPA 549.1
Dioxin (2,3,7,8 TCDD)	µg/L	varies	EPA 1613

NTU = Nephelometric Turbidity Units
mg = Milligram
µS = Microsiemens

Due to time constraints, the need to work through weekends, and the need to submit samples to laboratories on the weekend, several laboratories were used for the analytical work. In addition, specialist laboratories were used for age dating using the tritium and oxygen/deuterium isotope analyses. The following are the State Certified Laboratories and specialist laboratories used for analytical testing.

- BSK Associates
- Ceres Analytical Laboratory
- Maxxam Analytics
- Monterey Bay Analytical Services
- Pace Analytical
- SIRFER Stable Isotope Ratio Facility for Environmental Research (University of Utah)
- Weck Laboratories, Inc.
- GEOCHRON Laboratories
- McCampbell Analytical, Inc.

5.2 Groundwater Quality - CEMEX Area

Lithologic, geophysical, and groundwater quality data was collected from borings drilled at the CEMEX facility. The geologic data and geophysical data were used with other published data and driller's logs to construct Cross-Section 1-1' (see Figures 7a and 7b). The cross-section extends from offshore, eastward, through the CEMEX facility and the Monterey Peninsula Landfill into the Salinas Valley. The stratigraphic relationships indicate that groundwater aquifers beneath the CEMEX facility are present in the Younger and Older Dune Sand, in terrace deposits below the Dune Sand, and in what is interpreted as Aromas Sand (?) below the terrace deposits. The terrace deposits are separated from the underlying Aromas Sand (?) by a distinct "blue" clay unit which suggests a change in depositional environment at an elevation of approximately -220 ft amsl. The groundwater present in the terrace deposits appears to be hydrostratigraphically equivalent to the 180-Foot Aquifer is therefore termed 180-FTE Aquifer to be consistent with the nomenclature used in this region. As interpreted, the 180-FTE Aquifer transitions

eastward and is in erosional contact with the older alluvium (which contains the 180-Foot Aquifer) in the Salinas Valley. The sedimentary transition eastward towards the Salinas Valley is shown in Figure 7a. The 180-FTE and 180-Foot Aquifers, although depositionally and chronologically different, are hydrostratigraphically equivalent. The degree of hydrostratigraphic equivalence will be evaluated by the long-term test slant well aquifer testing program.

Table 5-3 summarizes TDS concentrations by depth and interpreted hydrostratigraphic unit at CEMEX. TDS concentrations in the Dune Sand Aquifer range from approximately 28,000 mg/L near the shore to approximately 4,800 mg/L inland in the vicinity of the CEMEX Office (see Figure 3).

Table 5-3 Summary of Water Quality by Hydrostratigraphic Unit-CEMEX

Hydrostratigraphic Unit	CX-B1WQ			CX-B2WQ			CX-B4		
	Zone	Depth(ft, bgs)	TDS (mg/L)	Zone	Depth(ft, bgs)	TDS (mg/L)	Zone	Depth(ft, bgs)	TDS (mg/L)
Dune Sand Aquifer	6	51-61	24,452	4	55-65	26,700	5	58-68	4,815
	5	84-94	28,111						
180-FTE	4	134-144	26,921	3	104-114	26,800	4	110-120	24,000
	3	182-192	32,034	2	160.5-170.5	16,200	3	155-165	20,500
180-400-Aquitard (?)	2	237-247	16,122						
400-FT Aquifer	1	274-284	24,888	1	215-225	26,500	2	248-258	27,200
							1	306-316	29,800

This condition indicates that the Dune Sand Aquifer is directly influenced by the ocean. This influence decreases inland where the infiltration of precipitation and applied agricultural water provide the greater influence.

Groundwater in the 180-FTE Aquifer ranges in TDS concentration, from approximately 16,000 mg/L to approximately 32,000 mg/L. The TDS concentration is generally consistent from the near shore area to the inland area near the CEMEX office. This condition indicates that surface water does not influence the TDS concentration and that the groundwater is influenced by seawater intrusion. The old CEMEX well was reportedly screened in the 180-FTE Aquifer and was abandoned due to high TDS content. However, the driller's log shows that the well was perforated from 246 to 506 ft bgs, which would have placed the perforations in the 400-Foot Aquifer based on the current interpretation. Similar TDS concentrations in the Dune Sand Aquifer within at least 1,500 ft of the shore and the underlying 180-FTE Aquifer, suggest that the two aquifers are in hydraulic connection. In addition, the range of TDS concentrations in the lower portion of the 180-FTE Aquifer suggests that groundwater is present in sediment lenses that may be more isolated from each other and potentially locally isolated from the overlying aquifers.

The Dune Sand Aquifer and upper portion of the 180-FTE Aquifer contain groundwater that is enriched in calcium and strontium, suggesting that geochemical transformation from seawater intrusion has impacted the groundwater in approximately the upper 200 ft. The tritium analysis for samples from CX-B1WQ and CX-B2WQ is discussed in Section 5.8 and indicates that groundwater in the Dune Sand Aquifer is youngest, which is consistent with influence from rainfall and irrigation. The groundwater in the upper portion of the 180-FTE Aquifer may be slightly older and apparently has not had time for geochemical processes from seawater intrusion to impact the quality. The complete age dating analysis will be provided as an addendum to this technical memorandum.

The Dune Sand Aquifer extends seaward and merges with Holocene deltaic deposits beneath the seafloor of Monterey Bay. The base of the terrace deposits in the 180-FTE Aquifer also extend seaward and are unconformably overlain by the Holocene Deltaic deposits at an elevation of approximately -220 ft amsl.

5.3 Groundwater Quality - Moss Landing Area

The Moss Landing area is located at the mouth of the Salinas River, which overlies the 180/400-Foot Aquifer Subbasin. The six exploratory borings primarily penetrated fluvial sediments associated with Holocene Salinas River deposition.

The Perched "A" Aquifer is ascribed to the Holocene river alluvium and considered to be the hydrostratigraphic equivalent of the Dune Sand Aquifer located to the south. The Perched "A" Aquifer in the Moss Landing area is composed of interbedded river and floodplain deposits. With the exception of the sediments penetrated in Boring PR-1, individual sand and sand and gravel lenses do not appear to be either vertically or areally extensive. Significant variations in TDS concentrations suggest that fresh groundwater is mixed with seawater, and is likely present in semi-isolated lenticular deposits.

Table 5-4 provides a summary of TDS concentrations by hydrostratigraphic unit in the Moss Landing area. TDS concentrations in the Perched "A" Aquifer appear to be influenced by fresh or brackish water in the Moss Landing Harbor area, as indicated by TDS concentrations ranging from 3,200 mg/L to 8,600 mg/L in Borings ML-1, Ml-2, ML-3 and ML-4 located near waterways. Groundwater samples from Borings MDW-1, PR-1 and ML-6 were at near seawater quality, reflecting proximity to the ocean.

Boring PR-1 penetrated a very permeable unit in the Perched "A" Aquifer between 58 ft to 139 ft bgs. Groundwater in this zone interval approximated seawater quality (i.e., 34,000 mg/L TDS). It is interpreted that the lowest portion of Boring PR-1 penetrated the SVA. Very low TDS concentrations (630 mg/L) encountered in the lowest zone in Boring PR-1 suggests that isolated zones of freshwater

may exist within the 180-Foot Aquifer or that the sand unit is laterally discontinuous and may be interbedded with the SVA. In this last interpretation, Boring PR-1 did not completely penetrate the SVA.

Table 5-4. Summary of Water Quality by Hydrostratigraphic Unit- Moss Landing

Hydrostratigraphic Unit	MDW-1			PR-1			ML-1		
	Zone	Depth(ft, bgs)	TDS (mg/L)	Zone	Depth(ft, bgs)	TDS (mg/L)	Zone	Depth(ft, bgs)	TDS (mg/L)
Perched A Aquifer	4	60-70	21,900						
				2	125-135	34,000	2	90-100	3,200
							1	113.5-118.5	22,000
180-FT Aquifer	3	152-162	26,600						
	2	187-197	30,200						
	1	237-247	31,000	1	190-200	630*			

Hydrostratigraphic Unit	ML-2			ML-3			ML-4			ML-6		
	Zone	Depth(ft, bgs)	TDS (mg/L)	Zone	Depth(ft, bgs)	TDS (mg/L)	Zone	Depth(ft, bgs)	TDS (mg/L)	Zone	Depth(ft, bgs)	TDS (mg/L)
Perched A Aquifer	2	90-100	8,100	2	103-113	4,200	2	74.5-84.5	8,600	2	100-110	28,000
	1	167-177	19,000	1	189-190	7,400	1	163.5-173.5	21,000	1	152-162	34,000

*Groundwater from Zone of PR-1 may be contained in an isolated zone within the SVA

Boring MDW-1 penetrated the 180-Foot Aquifer. Groundwater collected from three depth intervals within the 180-Foot Aquifer had TDS concentrations close to seawater.

5.4 Determining Average Central California Coast Seawater Quality

Average salinity estimates for the central California coastal region were established based on historical salinity measurements taken at the Granite Canyon monitoring station operated by the Moss Landing Marine Laboratory (Shore Stations Monitoring Program, 2014). Daily salinity measurements were made based on samples collected near the intake for the Marine Pollution Studies Laboratory. An average 33.69 Practical Salinity Units (PSU) salinity was calculated from the Granite Canyon monitoring data based on the average of daily salinity measurements from January 1986 through January 2011.

The composition of major chemical constituents in central California coastal seawater was then calculated from the major chemical constituent concentrations in standard seawater (JGOFS, 1997) multiplied by the ratio of the average local salinity (approximately 33.69) to standard seawater salinity (approximately 35.17). Standard seawater composition and average central California coastal seawater composition is listed in Table 5-5.

Table 5-5. Standard Seawater and Central California Coast Seawater

Parameter	Units	Mean Seawater Values	Central California Coast Average Seawater Values **
Total Dissolved Solids	mg/L	35,176	33,694
Salinity	PSU*	35.17	33.69
Potassium	mg/L	399	382
Sodium	mg/L	10,784	10,329
Magnesium	mg/L	1,284	1,230
Calcium	mg/L	412	395
Strontium	mg/L	7.9	7.57
Bicarbonate	mg/L	108	103
Chloride	mg/L	19,352	18,537
Fluoride	mg/L	1.3	1.25
Sulfate	mg/L	2,712	2,598
Total Boron	mg/L	4.55	4.35
Bromide	mg/L	67.3	64.5

* PSU = Practical Salinity Unit

** Ocean water composition calculated from mean salinities measured at the Granite Canyon Monitoring Station by Moss Landing Marine Laboratories. Average Salinity based on 1988 – 2011 monitoring data.

5.5 Borehole Water Quality Results

Table 5-6 lists the boreholes where water quality samples were collected and the corresponding depth intervals, measured TDS, and calculated TDS. Complete water quality analysis from borehole testing is included in Appendix G. Measured TDS values listed in Table 5-6 were determined using Standard Method 2540, and the calculated TDS values were determined from the water quality analysis for each borehole. Calculated water quality included bicarbonate and all other major and minor ions. Trilinear groundwater plots for the water quality data from CEMEX borings (Boring CX-B1WQ, CX-B2WQ, and CX-B4) are presented on Figure 10. Trilinear groundwater plots for the water quality data from the Moss Landing borings (ML-1, ML-2, ML-3, ML-4, ML-6, PR-1, and MDW-1) are presented on Figure 11. The water quality from the CEMEX borings and the Moss Landing borings plot similarly, suggesting a common source water.

Table 5-6. Comparison of Measured TDS and Calculated TDS for Borehole Water Quality Samples

Zone	Depth Interval (ft)	Measured Total Dissolved Solids mg/L	Calculated Total Dissolved Solids mg/L	Agreement Between Calculated and Measured TDS % Difference
CEMEX Boreholes				
CX-B1WQ-1	274-284	25,200	24,606	-2.4%
CX-B1WQ-2	237-247	14,600	15,177	3.8%
CX-B1WQ-3	182-192	35,600	32,719	-8.8%
CX-B1WQ-4	134-144	26,500	25,547	-3.7%
CX-B1WQ-5	84-94	27,400	26,458	-3.6%
CX-B1WQ-6	51-61	24,800	23,663	-4.8%
CX-B2WQ-1	215 - 225	26,500	23,041	-15.0%
CX-B2WQ-2	161 - 171	16,200	12,599	-28.6%
CX-B2WQ-3	104 - 114	26,800	24,790	-8.1%
CX-B2WQ-4	55 - 65	26,700	25,153	-6.2%
CX-B4-1	306 - 316	29,800	25,130	-18.6%
CX-B4-2	248 - 258	27,200	25,072	-8.5%
CX-B4-3	155 - 165	20,500	18,293	-12.1%
CX-B4-4	110 - 120	24,000	19,744	-21.6%
CX-B4-5	58 - 68	4,815	3,884	-24.0%
Moss Landing Boreholes				
ML-1-1	113.5-123.5	22,000	21,399	-2.8%
ML-1-2	90-100	3,200	3,094	-3.4%
ML-2-1	167-177	19,000	21,870	13.1%
ML-2-2	90-100	8,100	6,872	-17.9%
ML-3-1	180-190	7,400	6,732	-9.9%
ML-3-2	103-113	4,200	4,229	0.7%
ML-4-1	163.5-173.5	21,000	18,542	-13.3%
ML-4-2	74.5-84.5	8,600	8,002	-7.5%
ML-6-1	152-162	34,000	33,230	-2.3%
ML-6-2	100-110	28,000	28,580	2.0%
PR-1-1	190-200	630	760	17.1%
PR-1-2	125-135	34,000	33,767	-0.7%
MDW-1-1	237 - 247	31,000	28,789	-7.7%
MDW-1-2	187 - 197	30,200	29,778	-1.4%
MDW-1-3	152 - 162	26,600	24,772	-7.4%
MDW-1-4	60 - 70	21,900	20,814	-5.2%

5.6 Distinguishing Water Quality from Upper and Lower Aquifers

One of the objectives of the sampling effort was to determine if water quality measured in the upper aquifers could be distinguished from that in the lower aquifers. Several water quality analytical and age dating methods were used to aid in differentiating the upper aquifers from the lower aquifers. Vengosh (2002) used ratios of calcium, magnesium, and lithium to evaluate the source of increased salinity in the Salinas Valley. The methods employed by Vengosh were applied to the water quality samples collected for this investigation. The results are discussed below.

Groundwater samples collected were analyzed for tritium content for determining relative age as well as oxygen ($\delta^{18}O$) and hydrogen ($\delta^{2}H$) isotopes to evaluate the relative contribution of different source waters. The results of these analyses are discussed in Section 5.8 and 5.7.3, respectively.

5.7 Evaluation of Source Waters

5.7.1 CEMEX Boreholes

Prior work in Salinas Valley and coastal central California by Vengosh (2002) had evaluated the geochemical interactions, which occur when seawater intrudes into inland aquifers. When compared to the local seawater values, shifts in some chemical constituents including calcium, sodium, strontium, and boron occur in intruded seawater. Vengosh reported that intruded seawater had enriched ratios of calcium, magnesium, and lithium when compared to those seen in standard seawater.

Water quality data from CEMEX boreholes were analyzed by comparing chloride ratios of the major ion groups with those of standard seawater for the central California coastal region. Chloride is used as a reference in these comparisons, as it is generally conservative and has not been reported to undergo water/rock exchange reactions. Figures 12 through 18 show the ratios of chloride to TDS, Sodium, Calcium, Sulfate, Bromide, Boron, and Strontium measured at different depths in CEMEX borehole CX-B1WQ, CX-B2WQ-1, and CX-B4-1. The dashed line shown in each figure represents the ratio of chloride to the given ion based on the average ocean water values measured for the central California coast (see Table 5-3).

TDS levels in CX-B1WQ zones 1, 4, 5, and 6 are similar (approximately 23,000 to 26,000 mg/L) whereas Zone 2 is substantially lower (15,177 mg/L) and Zone 3 is substantially higher at 32,700 mg/L (see Table 5-3). The chloride/TDS ratio in all six of the zones measured in CEMEX Borehole CX-B1 generally corresponds to diluted seawater (Figure 12). With the exception of Zone 2, chloride/TDS ratios from CX1-B2WQ are similar and tightly clustered around 25,000 mg/L TDS. Each of the zones sampled in Borehole CX-B4 is consistent with diluted seawater ratios for chloride/TDS over a range of TDS values ranging from approximately 4,000 mg/L in the upper zone to 25,000 mg/L in the two lower zones (Figure 12).

When comparing the relative ratios of chloride/sodium and chloride/calcium for Boreholes CX-B1WQ, CX-B2WQ, and CX-B4, there is a clear departure from the local seawater ratios for most of the borehole zones sampled. Figure 13 shows that sodium is comparably depleted in borehole water samples as the chloride/sodium ratios are generally below the local seawater ratio. The relative depletion in sodium is greater in the lower zone samples of all three boreholes as compared to the upper zones (Figure 13). Chloride/calcium ratios shown on Figure 14 indicate that calcium enrichment has occurred as chloride/calcium ratios are well above the diluted seawater line. The trend in relative calcium enrichment is greater at lower zone and decreases in the upper zones for all three boreholes in the CEMEX area.

Figure 15 shows the relative depletion and enrichment of sodium and calcium in the three CEMEX area boreholes as calculated using the ΔCa and ΔNa values, which are determined based on the measured and calculated values based on the standard seawater ratio.

Calcium enrichment and sodium depletion was reported by Vengosh in intruded seawater and was attributed to a base-exchange reaction with clay minerals where calcium is exchanged with sodium between the solid and liquid phase. Figure 14 suggests that the shallower zones in Boreholes CX-B1WQ, CX-B2WQ, and CX-B4 have undergone less calcium enrichment and the lowermost zones have seen the highest amount of calcium enrichment relative to diluted seawater.

Figures 16 and 17 show the ratio of chloride/boron and chloride/strontium, respectively in the Cemex area boreholes. The boron and strontium ratios in the upper zones in Borehole CX-B1WQ (Zones 4, 5, and 6) have similar depletion magnitudes (with respect to Boron, Figure 16) and enrichment with respect to Strontium (Figure 17). Boreholes CX-B4 and CX-B2WQ shows a similar trend to that of CX-B1WQ where the lower zones show a greater departure from the seawater dilution line that the upper zones.

In summary, the results from Boreholes CX-B1WQ, CX-B2WQ, and CX-B4 suggest that the water from the shallower zones (above 144 ft) may be distinguished from water from the deeper zones even if they are at the same TDS level. Water from the deepest zone (274-284 ft) shows a marked distinction in the amount of calcium and strontium enrichment, and sodium depletion when compared to shallower zones. The difference in the amount of calcium and strontium enrichment and sodium depletion between the upper zones and lower zones in the CEMEX area boreholes is likely a function of the relative abundance of clay formation materials in the lower formation as well as groundwater age.

5.7.2 Moss Landing Boreholes

Moss Landing water quality analysis is discussed in two general regions; the Moss Landing Harbor area (Borings ML-1, ML-2, ML-3, ML-4, and ML-5) and the area south of Potrero Road (Borings PR-1 and MDW-1). Water quality samples were collected from a shallow and deep zone in each of the five boreholes drilled in the immediate Moss Landing area (ML boreholes). Results from water quality samples in the Moss Landing Area are listed in Table 5-6.

5.7.2.1 Moss Landing Harbor Area

Chloride ratios of the major ions were compared against the average coastal seawater values to determine if water quality from the upper and lower zones could be distinguished from each other.

TDS results for the Moss Landing boreholes show that the deeper zones in Boreholes ML-1, ML 2, and ML-4 have substantially higher TDS levels than the shallow zones. Borehole ML-3 and ML-6 both showed less variation between TDS measured in the upper and lower zones (Table 5 4).

Figure 19 shows the chloride/TDS ratios from water samples collected from the Moss Landing area boreholes. The dashed line on Figure 19 represents the chloride/TDS ratio of average diluted seawater along the central California coast. The TDS/chloride ratios measured in the Moss Landing boreholes are in relatively close agreement with the seawater dilution line, which indicates the water is consistent with intruded seawater, which has been diluted.

Relative sodium depletion and calcium enrichment is shown on Figure 20 and Figure 21. Results indicate that a relative enrichment of calcium and depletion of sodium has occurred, similar to trends seen in the CEMEX area boreholes. Figure 21 shows a comparison of the net calcium enrichment compared against the net sodium depletion where it can be seen that this phenomena is occurring to some extent in nearly all samples. These data do not show a clear trend with respect to relative enrichment values seen in the upper and lower samples in the ML boreholes.

Figures 22 and 23 show the ratios of chloride to boron and strontium. Enrichment and depletion relative to diluted seawater may also be seen in these constituents in the ML boreholes. The relative depletion of boron and enrichment of strontium in lower zones of the Moss Landing Area boreholes correlate with CEMEX area borehole results and suggest base ion exchange with underlying clay formation materials.

The chloride/sulfate ratios (Figure 24) are generally lower in the Moss Landing boreholes, which may indicate sulfate reduction or some other geochemical transformations are occurring.

Water quality data from the Moss Landing area boreholes do show similar geochemical transformations as seen in the CEMEX area, however, there is not a clear trend between the upper and lower zones in the ML- boreholes. Although a substantial difference in TDS between the upper and lower zones is seen in some of the ML- boreholes, the ratios of chloride to the other major ions do not show a reliable trend with respect to relative enrichment or depletion at the Moss Landing site.

5.7.2.2 Molera and Potrero Road Parking Lots, Salinas River State Beach

Water quality samples were collected from a shallow zone and deep zone at the Potrero Road borehole (PR-1) and from four zones at the Molera Parking Lot located approximately one mile south of the Potrero Road parking lot.

Water quality data for Borehole PR-1 show that the lower zone sample is fresh water (TDS = 630 mg/L) and the upper zone sample is consistent with undiluted seawater (TDS = 34,000 mg/L). When comparing the chloride/major ion ratios in the high TDS sample at Potrero Road, there is not a substantial enrichment or depletion with respect to local seawater ratios (see Figures 19 through 24). This indicates that the geochemical transformations of intruded seawater into freshwater, which results in enrichment or depletion, are not occurring at this site.

TDS values in the MDW-1 borehole ranged from approximately 21,000 mg/L in the lowermost zone to approximately 29,000 mg/L in the upper zone. With respect to relative sodium depletion and calcium enrichment, a clear trend (Figure 21 and 22) is seen in the MDW-1 borehole were relative sodium depletion increases from the lower zones to the upper zones

Ratios of chloride to boron and strontium (Figures 23 and 24) indicate that the uppermost zone in the MDW-1 borehole (MDW-1-4, 60'-70') is consistent with diluted seawater for chloride/boron ratios and chloride/strontium ratios. The lower zones in the MDW-1 borehole show a greater departure from the diluted seawater line as a function of depth.

The chloride/sulfate ratios (Figure 25) for the MDW-1 borehole samples show close agreement with the diluted seawater line suggesting that geochemical and/or biological sulfate transformations are not occurring.

5.7.3 Results of $\delta^{2}H$ and $\delta^{18}O$ Analysis

Stable isotopes of oxygen and hydrogen were analyzed in water samples collected from the CEMEX borehole (CX-B1WQ), Moss Landing boreholes, and Potrero Road borehole. Isotope data were measured for all borehole water quality samples collected except ML-1 Zone 1 and ML-1 Zone 2. Water quality samples from ML-1 were not collected because the samples containers were not made available by the firm responsible for the sampling. Isotopic results from Boreholes CX-B2WQ, CX-B4 and MDW-1 is forthcoming and will be provided as an addendum to this report when they are available. Table 5-7 lists the results of the available oxygen and hydrogen isotopic analyses for groundwater samples collected from CEMEX and Moss Landing.

Table 5-7. Results of Oxygen and Hydrogen Isotope Analyses

Borehole and Zone Designation	Delta-Deuterium (δ^2H) (‰)*	Delta-Oxygen 18 ($\delta^{18}O$) (‰)*
CX-B1WQ-1	-18.4	-2.6
CX-B1WQ-2	-29.1	-4.26
CX-B1WQ-3	-6.21	-0.84
CX-B1WQ-4	-14	-2.03
CX-B1WQ-5	-12	-1.56
CX-B1WQ-6	-15.1	-2.08
ML-2-1	-19.2	-3.07
ML-2-2	-37.6	-5.3
ML-3-1	-40.1	-6.04
ML-3-2	-43.6	-6.43
ML-4-1	-24.5	-3.57
ML-4-2	-35.9	-5.23
ML-6-1	-5.55	-0.59
ML-6-2	-11	-1.33
PR-1-1	-42.5	-6.35
PR-1-2	-3	-0.4

The ratio of $\delta^{18}O$ and δ^2H may be used in geochemical analysis to evaluate the relative contribution of different source waters (e.g., surface water and ground water) when evaluating water mixtures. The relative enrichment or depletion of a given source water with respect to δ^2H and $\delta^{18}O$ may be used as a "fingerprint". If there is a sufficient distinction between different water sources, then the relative contribution from a given source may be estimated.

Results from isotopic analyses of borehole water samples for the CEMEX borehole are shown in Figure 26 and results from the Moss Landing boreholes and Potrero Road borehole is shown in Figure 27. The $\delta^{18}O$ and δ^2H data in both Figures are plotted against the Global Meteoric Water Line (GMWL) for reference. Isotopic data are referenced to Vienna Standard Mean Ocean Water (VSMOW) values, which is shown as $\delta^{18}O$=0‰ and δ^2H=0‰ values on both plots.

Isotopic data measured at the CEMEX site and at Moss Landing show a linear trend with respect to $\delta^{18}O$ and δ^2H. At the CEMEX facility, $\delta^{18}O/\delta^2H$ data show a linear relationship with the upper end points corresponding to Borehole CX-B1WQ Zone 3, which had the highest TDS (32,700 mg/L) and Borehole CX-B1WQ Zone 2 which had the lowest TDS (14,600 mg/L) (see Figure 26). Data measured at Moss Landing were bracketed by endpoints corresponding to 4,200 mg/L and 33,200 mg/L TDS in Boreholes ML-3 Zone 2 and ML-6 Zone 1, respectively (see Figure 27).

Isotopic results from the relatively low TDS boreholes (Boreholes ML-3 Zone 2 and PR-1 Zone 1) indicate that groundwater has not undergone significant evaporation, or geochemical isotopic fractionation, as the values are near the GMWL. For both the CEMEX site and Moss Landing sites, the trend of the borehole data intercepts the GMWL at similar values (δ^2H values ranging from -46 ‰ to approximately -52 ‰), which suggests that the fresh groundwater, which is mixing with intruded seawater at the CEMEX facility, closely corresponds to the GMWL.

Isotopic values measured in samples CX-B1WQ Zone 3, ML-6 Zone 1, and PR-1 Zone 2 represent a local endpoint for intruded seawater, which varies slightly between the sites. Samples from PR-1 Zone 2 are closest to VSMOW values ($\delta^{18}O$ = -0.4 ‰ and δ^2H= -3.0 ‰) while ML-6 Zone 1 and CXB1WQ Zone 3 show slightly more depletion in both $\delta^{18}O$ and δ^2H with respect to VSMOW.

5.8 Results of Tritium Analysis

5.8.1 Background: Tritium Source and Interpretation

Tritium is the radioactive isotope of hydrogen, which is often used as a tracer to target young waters (less than about 50 to 60 years old) and to show if there is a presence of modern recharge. The reported half-life of tritium varies; the current recommended half-life is 12.32 years, but some sources use the older half-life of 12.43 years (Kazemi et al., 2006; Tritium Laboratory, 2010). Tritium is produced through the natural cosmic ray bombardment of nitrogen and deuterium in the upper atmosphere, through the natural neutron radiation of lithium in rocks (especially granitic rocks), and through certain anthropogenic activities.

One of the most important and significant sources of tritium is from thermonuclear tests which were conducted in the northern hemisphere by the United States, United Kingdom, and former Soviet Union beginning in 1952 and peaking around 1963-1964. Additional French and Chinese tests were also conducted in the late 1970s. At the northern hemisphere peak in 1963, the tritium concentrations arising from thermonuclear weapons were three orders of magnitude greater than natural tritium concentrations, which usually range between 3-10 TU in the northern hemisphere and 1-5 TU in the southern hemisphere (Kazemi et al., 2006; Happle, 2010). This bomb pulse tritium signature can be traced into the subsurface and is sometimes used to provide information on the rate of groundwater recharge. However, waters younger than the mid-1960s will not show the bomb tritium peak.

Most methods used for analyzing tritium content yield only qualitative or semi-quantitative results; the precise age cannot be determined. Much of the reason for this is caused by uncertainty due to spatial and temporal variations in initial tritium concentrations at the time of recharge. In addition, it is possible to get similar tritium results from waters recharged before and after the tritium peak. This non-uniqueness is another uncertainty that has to be taken into consideration when analyzing the tritium

results. The presence of tritium itself, however, indicates the presence of "young" water (i.e., less than about 50-60 years old) due to recharge, or possibly borehole leakage. Waters older than about the mid-1950s will generally yield values at or below the tritium detection level of 0.8 TU. The absence of tritium does not in itself necessarily indicate an absence of modern recharge. All groundwater samples from wells represent a mixture of water molecules that may have a very wide range of age distributions arising from differences in flow paths. Therefore, the reported concentrations represent some sort of an average that may be produced from the mixing of water of different ages.

Measured tritium concentrations are expressed in Tritium Units (TU) where one TU is the equivalent of one tritium atom (or one THO molecule) per 1018 atoms of hydrogen (or 1018 H2O molecules). Tritium concentrations are also commonly reported in terms of Tritium Ratios (TR), where 1TR = 1TU. One TU is also equivalent to 0.1181 Becquerel per kilogram (Bq/kg), where 1 Becquerel is equal to one decay per second (Tritium Laboratory, 2010).

5.8.2 Tritium Results CX-B1WQ and CX-B2WQ

Tritium samples were taken from all borings conducted during this investigation. Tritium results for the Moss Landing borings are being re-run using a different method to reduce the detection limits. The results from Moss Landing and Borehole CX-B4 from CEMEX will be provided as an addendum to this report. Groundwater samples were analyzed for tritium at Geochron Laboratories in Chelmsford, Massachusetts using a half-life of 12.43 years. The measured tritium concentrations from CX-B1WQ and CX-B2WQ are presented in Table 5-8.

Table 5-8. Results of Tritium Analyses – CX-B1 WQ and CX-B2WQ

Boring	Water Quality Zone Zone	Depth Interval (ft, bgs)	Tritium Activity [TU] units	Error [TU] units
CX-B1WQ	1	274-284	0.35	±0.09
CX-B1WQ	2	237-247	0.04	±0.09
CX-B1WQ	3	182-192	0.01	±0.09
CX-B1WQ	4	134-144	0.5	±0.09
CX-B1WQ	5	84-94	0.48	±0.09
CX-B1WQ	6	51-61	0.81	±0.09
CX-B2WQ	1	215-225	0.1	±0.09
CX-B2WQ	2	161-171	0.18	±0.09
CX-B2WQ	3	104-114	0.44	±0.09
CX-B2WQ	4	55-65	0.62	±0.09

These values are also displayed graphically on Figure 5-1 as the tritium concentration versus the average sample depth.

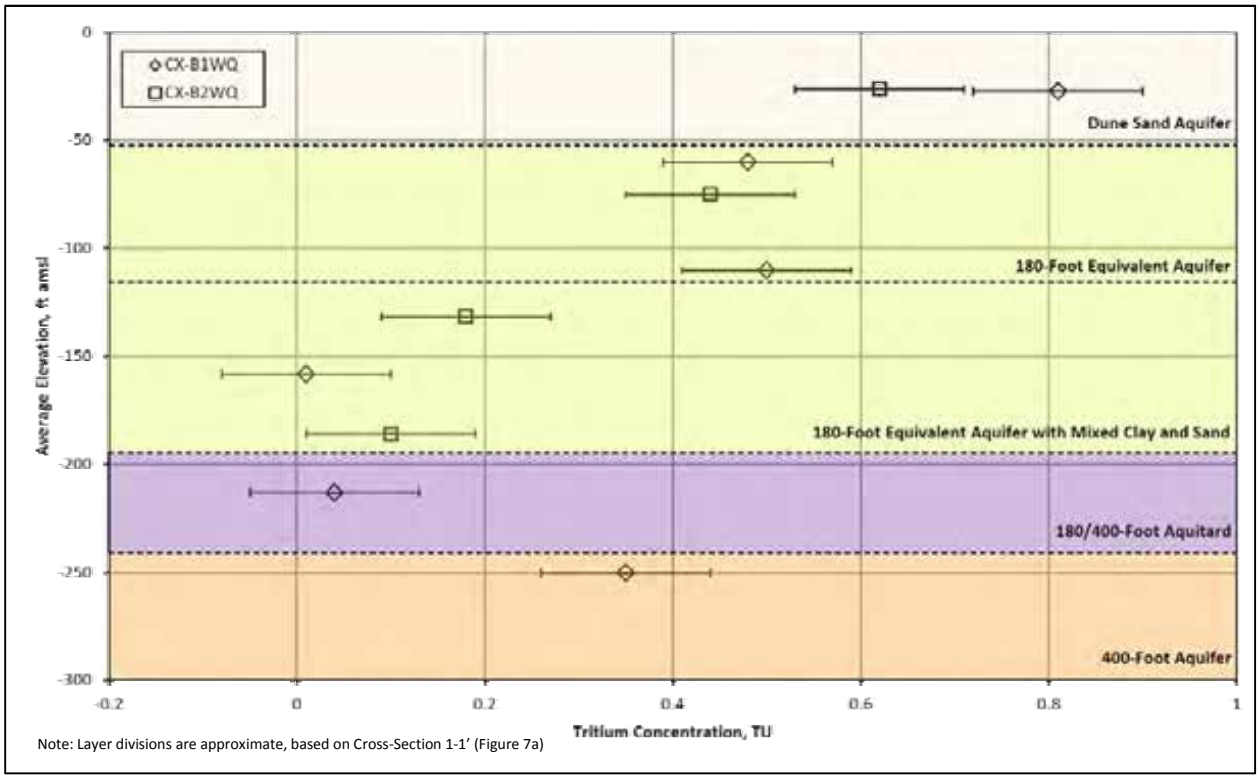

Figure 5-1. Tritium Concentration vs. Sample Elevation – CX-B1WQ and CX-B2WQ

Tritium concentration measured in groundwater samples from Boreholes CX-B1WQ and CX-B2WQ generally decreases with depth, indicating that water possibly takes longer to reach these locations. However, samples taken from elevations between -132 and -213 ft amsl (CX-B1WQ Zones 2 and 3, and CX-B2WQ Zones 1 and 2) have the lowest tritium concentrations. This depth at the base of the 180-FTE Aquifer contains a higher percentage of fine-grained materials and is underlain by the 180/400-Foot Aquitard. This implies that the presence of fine-grained sediments in the lower zone of the 180-FTE Aquifer and the 180/400-Foot Aquitard impedes the movement of water, resulting in water with an older age.

In a study conducted by Michel and others (1997), tritium concentrations along the coast of the Oxnard Plain in California were analyzed. All of the tritium samples came back with very low values and there was no apparent tritium spike in the data, which is similar to the results seen here. Michel et al. interpreted this to mean that the water at the sampled locations entered the subsurface prior to the 1963 tritium peak. Therefore, assuming there is no mixing with different source water, all of the

borehole tritium results from this study indicate that the water is older than the 1960s, with the exception of CX-B1WQ Zone 6 sample collected at 51 to 61 ft bgs.

6.0 NORTH MARINA AND CEMEX GROUNDWATER MODELS

GEOSCIENCE developed the NMGWM which covers the region of the current project, (see Figure 28). The NMGWM has been used to evaluate several proposed projects in the region and will be used, in part, to simulate the effects of slant well pumping. The model was developed in 2008 using computer codes MODFLOW and MT3DMS. In order to accurately model local effects of slant well pumping, a focused model, designated as the CM, is proposed. The CM will be located within the NMGWM centered at the CEMEX site. It will be constructed using the SEAWAT computer code (SEAWAT is a generic MODFLOW/MT3DMS-based computer program designed to simulate three-dimensional variable-density groundwater flow coupled with solute transport) to allow the simulation of sea water intrusion. The CM model will consist of 540 rows and columns with a uniform cell size of 20 feet to a side (see Figure 28), which is a significant refinement over the uniform grid size of 200 ft by 200 ft in the NMGWM. The decreased grid size will allow for a very accurate calibration by matching changes in groundwater levels and quality with historical data.

The exploratory boring information collected during this study has provided valuable data needed to determine the thickness and extent of the Dune Sand Aquifer, Perched "A" Aquifer, and the 180-FTE Aquifer and hydraulic conductivity data for model input. The model layers representing the Dune Sand Aquifer, Perched "A" Aquifer, SVA, and 180-FTE Aquifer will be refined using the new data. Aquifer parameters used in the model will be updated during and after the test slant well program as appropriate to reflect the water level changes occurring in the aquifers during the test slant well pumping.

6.1 Aquifer Characteristics

Hydraulic conductivity values for sediments encountered in the borings were evaluated using both laboratory permeameter test results and using grain-size distribution versus hydraulic conductivity relationship methods published by four different workers. The results are discussed in Section 3.2. Our experience has shown that laboratory permeameter testing typically results in much lower hydraulic conductivity values than those determined by grain-size distribution. Work recently completed by GEOSCIENCE in a coastal aquifer in Southern California, similar to the aquifers encountered in the current study, showed that hydraulic conductivity values calculated from pumping test data closely matched the hydraulic conductivity values using grain-size relationships (GEOSCIENCE, 2013). However, the hydraulic conductivity values determined by grain size distribution can vary significantly from pumping test results depending on the formation tested and selected grain size relationship used for analysis. Nonetheless, the hydraulic conductivity values assigned to the various geologic and aquifer units represent the best available data and will be used for constructing the CM and refining the

NMGWM. The hydraulic conductivity values will be updated with data obtained from the test slant well program.

For groundwater modeling, typical storativity values will be assigned to the aquifer units. Site specific storativity values will be calculated from data to be collected from the long-term pumping test which will be conducted during a subsequent phase of field investigations.

6.2 Model Layer Boundaries

Model layer boundaries and layer extents were defined using the cross-sections prepared from borehole data (see location map Figure 28, Cross-Sections 1-1', 2-2', and 3-3' on Figures 7a through 9, and Cross-Sections A-A' through G-G' on Figures 30 through 36) prepared using lithologic logs and wells from Kennedy/Jenks (2004), DWR and USGS WRIR 02-4003 (2002). The correlation of geologic and hydrostratigraphic units with the regional and local models is summarized in Table 6-1. As seen in the table, the NMGWM will further be refined in the CEMEX Model through the addition of model layers. The NMGWM layers 2 and 4 will each be modeled by 3 layers in the CEMEX Model (layers 2 through 4 and layers 6 through 8, respectively). This division allows for the refinement of aquifer parameters to more accurately reflect the different geologic layers present in these hydrostratigraphic units.

Table 6-1. Correlation of Geologic and Hydrostratigraphic with SVIGSM, NMGWM, CM Model Layers

180/400-Foot Aquifer Subbasin			CEMEX Area			SVIGSM Layer[1]	NMGWM Layer	CEMEX Model Layer
Surface Geologic Units	Surface Geologic Units Map Symbol	Hydro-stratigraphic Units	Surface Geologic Units	Surface Geologic Units Map Symbol	Hydro-stratigraphic Units			
Benthic Zone	-	Benthic Zone	-	-	Benthic Zone	Constant Head	1	1
Alluvium	Qal[2]	Perched "A" Aquifer	Dune Sand	Qd	Dune Sand Aquifer	1a	2	2
			Older Dune Sand	Qod				3
								4
Older Alluvium	Qo	Salinas Valley Aquitard	Older Terrace/ Marine Terrace	Qt (Qmt?)	180-FTE Aquifer	1a	3	5
		180-Foot Aquifer				1	4	6
Older Alluvium/ Marine Terrace	Qo/Qmt							7
Older Alluvium/ Older Alluvium Fan-Antioch	Qo/Qfa							8
Older Alluvial Fan – Placentia	Qfp	180/400-Foot Aquitard	Aromas Sand (undifferenciated) (?)	Qar (?)	180/400-Foot Aquitard	2a	5	9
Aromas Sand (undifferentiated)	Qar	400-Foot Aquifer			400-Foot Aquifer	2	6	10
Aromas Sand – Eolian/Fluvial Lithofacies	Qae/Qaf							
Paso Robles Formation	QT	400/900-Foot Aquitard	Paso Robles Formation	QT	400/900-Foot Aquitard	3a	7	11
		900-Foot Aquifer			900-Foot Aquifer	3	8	12

[1]SVIGSM considers "a" layers to be aquitards (vertical hydraulic conductivity and thickness are input)
[2]Subsurface Holocene geologic unit not mapped at surface

Ninety One (91) control points were used to develop the thickness of each model layer and were based on data from all of the cross-sections. The points were then contoured to provide the rest of the model layer surface. The elevation of each model layer is the top elevation minus the determined thickness.

For example, the bottom elevation of model layer 1 is the surface elevation minus the thickness of model layer 1; the bottom elevation of model layer 2 is the bottom elevation of model layer 1 minus the thickness of model layer 2, etc. The layer thicknesses for the NMGWM are shown on Figures 37 through 43.

6.3 Hydraulic conductivity

Initial model values for the refinement of horizontal hydraulic conductivity were estimated based on the descriptions of borehole samples, laboratory data, and grain size distribution and hydraulic conductivity relationships. A discussion of the development of the horizontal hydraulic conductivity values is provided in Section 3.2.

6.3.1 Vertical Hydraulic Conductivity

Values for the refinement of model layer vertical hydraulic conductivity were estimated based on the descriptions of borehole samples and a series of curves developed to show the relationship between sediment texture and hydraulic conductivity. These curves, representing maximum and minimum horizontal and vertical hydraulic conductivity values, were developed using the following equation (Durbin, 2013; Faunt, 2009):

$$K_i = \left(K_c{}^p \, F_{c,i} + K_f{}^p F_{f,i}\right)^{1/p}$$

where:

Ki	=	Hydraulic conductivity for cell i [ft/day]
Kc	=	Horizontal hydraulic conductivity for coarse-grained material [ft/day]
Kf	=	Horizontal hydraulic conductivity for fine-grained material [ft/day]
Fc,i	=	Fraction of coarse-grained material in cell i [unitless]
Ff,i	=	Fraction of fine-grained material in cell i [unitless]
p	=	Empirical parameter

Lithologic log intervals from the borings were classified as either being “coarse-grained” or “fine-grained” based on the sediment texture described in the logs and texture classification procedures observed in the USGS Professional Paper 1766 (Faunt ed., 2009). Coarse-grained sediment was defined as having a grain size of fine sand or greater (i.e., sand, gravel, pebbles, and cobbles). Fine-grained material was defined as any texture that consisted predominately (greater than 50%) of silt or clay.

To determine the Kc and Kf, the individual lithologic intervals for each borehole were first assigned a maximum or minimum hydraulic conductivity value based on the soil classification for that interval and the estimates of horizontal conductivity made from borehole sample grain size distribution curves. The methods used to estimate the sample hydraulic conductivities are described in greater detail in Section 3.2.1. The weighted Kc and Kf were then calculated for each borehole and each model layer using both the minimum and maximum hydraulic conductivities in order to provide a possible range of Kc and Kf that could be expected for each area (i.e., CEMEX area and Moss Landing area). The results for the CEMEX area are provided in Tables 6 and 7 for the maximum and minimum hydraulic conductivity values respectively and the results for the Moss Landing area are provided in Tables 8 and 9 for the maximum and minimum hydraulic conductivity values, respectively.

The empirical parameter shown in the equation above imparts a particular textural structure to help approximate flow in a heterogeneous anisotropic groundwater system. P values of 0.93 and -0.62 were used for calculating horizontal and vertical hydraulic conductivity, respectively, based on numerical experiments conducted by Durbin (2013).

Figures 44 through 47 show the different curves for the calculation of hydraulic conductivity, and the ranges shown represent the initial values for horizontal and vertical hydraulic conductivity which will be used for the refinement of model aquifer parameters. These values will be modified during model calibration. Figures 44 and 45 show the sediment texture versus hydraulic conductivity at the CEMEX site for the Dune Sand Aquifer and 180-FTE Aquifer, respectively. For the Dune Sand Aquifer, it was estimated that the average percentage of coarse-grained deposits was 98%. Therefore, the horizontal hydraulic conductivity is expected to range from 109 to 304 ft/day with an average of 207 ft/day, while the vertical hydraulic conductivity is expected to range from approximately 8 to 12 ft/day with an average of approximately 10 ft/day. It was estimated that for the 180-FTE Aquifer, the average percentage of coarse-grained deposits was 78%. This correlates with a horizontal hydraulic conductivity value ranging from 71 to 216 ft/day and averaging 143 ft/day. The vertical hydraulic conductivity for this aquifer is expected to range from 0.11 to 0.21 ft/day with an average of 0.16 ft/day.

The sediment texture versus hydraulic conductivity curves for the Dune Sand/Perched “A” Aquifer near the Moss Landing site is shown on Figure 46. These two aquifers are combined because they represent a single model layer. Based on the borehole grain size analysis presented above, the average percentage of coarse-grained deposits is estimated at 49%. As shown, this correlates to a horizontal hydraulic conductivity ranging from 101 to 333 ft/day with an average of 217 ft/day and a vertical hydraulic conductivity ranging from 0.04 to 0.06 ft/day with an average of 0.05 ft/day.

Figure 47 shows the sediment texture versus hydraulic conductivity at the Potrero Road site for the Dune Sand/Perched “A” Aquifer. It was estimated that the average percentage of coarse-grained

deposits here was 93%. Therefore, the horizontal hydraulic conductivity is expected to range from 367 to 1,205 ft/day with an average of 786 ft/day, while the vertical hydraulic conductivity is expected to range from 0.92 to 1.5 ft/day with an average of 1.2 ft/day.

7.0 FINDINGS

7.1 General

- The conceptual hydrogeologic model developed from this investigation suggests that a feedwater supply system using slant wells at the CEMEX site is feasible and can utilize the Dune Sand Aquifer and the underlying terrace deposits as conduits to extract water through the seafloor beneath Monterey Bay.
- This opinion will be tested using the newly constructed CEMEX Model and the refined NMGWM and should be field tested using a test slant well and groundwater monitoring system as described in the Hydrogeologic Investigation Workplan.
- A permeable unit of significant thickness containing groundwater of seawater quality was penetrated in the Moss Landing Boring PR-1 near Boring ML-1. To the north, this unit pinches out and mixes with fine-grained sediments. To the south, the unit decreases in thickness to approximately 25 feet in boring MDW-1 over a distance of approximately one mile.
- The conceptual model also indicates that the Perched "A" Aquifer between the Molera and Sandholt Road Salinas River State Beach parking lots could provide an alternative target for construction of a subsurface feedwater supply system.

7.2 CEMEX Area

The CEMEX facility is located on the westernmost edge of the 180/400-Foot Aquifer Subbasin of the Salinas Valley Groundwater Basin, as currently mapped by DWR (2003) and the MCWRA (2011). The findings of the investigation at CEMEX are summarized below:

- A significant clay layer is not present beneath the Dune Sand Aquifer at the CEMEX site at elevations commonly attributed to the SVA, suggesting a different depositional environment than that of the 180-Foot Aquifer in the Salinas Valley. The water quality data suggests groundwater in the Dune Sand Aquifer may be in hydraulic continuity with the underlying aquifer units. The degree of hydraulic continuity will be determined by construction of aquifer specific monitoring wells and the long-term pumping test of the test slant well.
- Stratigraphic relationships and lithologic observations indicate that the aquifer system underlying the Dune Sand Aquifer consists of terrace deposits that are older than the inland 180-Foot Aquifer deposits, since they underlie the Older Dune Sand.

- The terrace deposits appear to be a distinct lithologic unit in terms of geologic history and depositional environment in the Dune Highland area and may be hydrostratigraphically equivalent to the 180-Foot Aquifer in the Salinas Valley.
- For purposes of this document the alluvial materials encountered near the coast (in the CEMEX area) are based solely on analyses of borehole samples (and geophysical borehole logs). As of yet, no direct correlation can be made between these coastal alluvial deposits and the standard naming convention found further inland (e.g., 180-Foot Aquifer, 400-Foot Aquifer, SVA, etc.).
- As a hydrogeologic unit, the terrace deposits will be designated as the 180-FTE Aquifer. The extent of hydrostratigraphic equivalence will be evaluated through a pumping test utilizing the test slant wells and a monitoring network.
- The current interpretation of the distinctive dark greenish-gray clay found at depths ranging from 241 to 282 ft bgs at CEMEX is that it may represent a change in the depositional history and is underlain by a unit equivalent to the Aromas Sand(?)/400-Foot Aquifer. However, results of groundwater quality sampling from the 400-Foot Aquifer have results similar to that of the overlying Dune Sand Aquifer and 180-FTE Aquifer.
- Both the Dune Sand Aquifer and the underlying 180-FTE Aquifer extend seaward beneath the Monterey Bay.
- Groundwater in the Dune Sand Aquifer and most of the groundwater in the 180-FTE Aquifer exhibit high concentrations of TDS, ranging from 24,000 to 32,000 mg/L.
- Hydraulic conductivity for the Dune Sand at CEMEX ranged from an average low value of 273 ft/day to an average high value of 779 ft/day.
- Hydraulic conductivity for the Older Dune Sand at CEMEX ranged from an average low value of 136 ft/day to an average high value of 372 ft/day.
- Hydraulic conductivity for the 180-FTE terrace deposits ranged from an average low value of 113 ft/day to an average high value of 342 ft/day.
- Hydraulic conductivity values will be further refined based on the long-term test slant well pumping test.
- Analysis of cation/anion ratios indicates that groundwater in the lower portion of 180-FTE Aquifer and in the 400-Foot Aquifer have been geochemically altered due to seawater intrusion.
- Tritium results indicate that groundwater in the lower portion of the 180-FTE Aquifer is older than groundwater in the upper portion of the 180-FTE Aquifer and the Dune Sand Aquifer.

- Analysis of oxygen and hydrogen isotopes suggests that in both the CEMEX and Moss Landing sites, saltwater from the ocean is mixing with a freshwater source that has not undergone significant evaporation (as would be expected of a surface water source).
- Hydrostratigraphic relationships indicate that slant wells drilled into the Dune Sand Aquifer and 180-FTE Aquifer will receive recharge primarily from ocean sources through vertical leakage from the sea floor and horizontal recharge from offshore subsea aquifers. This will be tested by the CM and refined NMGWM as well as field pumping tests.

7.3 Moss Landing Hydrogeologic Conditions

The Moss Landing area is located north of the mouth of the Salinas River, which overlies the westernmost edge of the 180/400-Foot Aquifer Subbasin. Borings were drilled and sampled at Moss Landing Harbor and at the Molera, Potrero Road, and Sandholt Road parking lots of Salinas River State Beach. The exploratory borings primarily penetrated fluvial sediments associated with Holocene and Late Pleistocene Salinas River deposition.

The Perched[7] "A" Aquifer is ascribed to the Holocene river alluvium and considered to be the hydrostratigraphic equivalent of the Dune Sand Aquifer located to the south.

- The Perched "A" Aquifer in the Moss Landing area is composed of interbedded river and floodplain deposits.
- With the exception of the sediments penetrated in Boring PR-1 and MDW-1, individual sand and sand and gravel lenses do not appear to be either vertically or areally extensive in Moss Landing.
- Significant variations in TDS concentrations suggest that groundwater is mixed with seawater, and is likely present in semi-isolated lenticular deposits.
- In general, the upper isolated aquifer test zones were above a depth of 110 ft bgs. TDS concentrations ranged from 3,200 mg/L to 34,000 mg/L.
- The lower isolated aquifer zones were generally constructed at depths exceeding 150 ft bgs. With the exception of Zone 1 of PR-1 (190-200 ft bgs) at 630 mg/L, the TDS concentrations ranged from 7,400 mg/L to 34,000 mg/L.

[7] The term Perched "A" Aquifer refers to the shallow aquifer above the Salinas Valley Aquitard. Traditionally, the term "perched" aquifer refers to a hydrogeologic condition where an aquifer is formed by groundwater being present above (perching on) an impermeable unit such as clay but with an unsaturated portion of an aquifer between the bottom of the clay and the underlying saturated portion of a lower aquifer.

- Boring PR-1 penetrated a very permeable unit in the Perched "A" Aquifer from 54 to 139 ft bgs. Groundwater in this interval approximated seawater quality (i.e., 34,000 mg/L). This unit is interpreted to continue, but decrease in thickness southward towards Boring MDW-1. To the north, the unit is interbedded with fine-grained units.
- It is interpreted that the lowest portion of Boring PR-1 penetrated the SVA. Very low TDS concentrations (630 mg/L) encountered in the lowest zone in Boring PR-1 suggest that isolated zones of freshwater may exist within the 180-Foot Aquifer or that the sand unit is laterally discontinuous and may be interbedded with the SVA. In this last interpretation, Boring PR-1 did not completely penetrate the SVA.
- Hydraulic conductivity values for the permeable portion of the Perched "A" Aquifer penetrated in PR-1 ranged from 194 ft/day to 717 ft/day, based upon relationships between grain size distribution and hydraulic conductivity.
- The permeable unit between Boring PR-1 and MDW-1 represents a potential location for slant wells.
- The Moss Landing Borings (ML-1, ML-2, ML-3, ML-4, and ML-6) did not penetrate significant thicknesses of permeable deposits to produce the required feedwater supply volume for the MPWSP.

7.4 Groundwater Models

The geologic and hydrogeologic data collected during this investigation was used to prepare the interpretations of hydrostratigraphic relationships in the Moss Landing and CEMEX areas which will be used to refine the NMGWM and to develop the CEMEX focused groundwater model. Table 6-1 summarizes the correlation of geologic and hydrostratigraphic units with model layers.

8.0 REFERENCES

California Department of Public Works, Division of Water Resources, 1946. "Salinas Basin Investigation, Bulletin No. 52."

California Department of Water Resources, 1969. *Geology of the Lower Portion of the Salinas Valley Ground Water Basin*. Office Report, Central District Office.

California Department of Water Resources, 1973. Lower Salinas Valley Seawater Intrusion Investigation.

California Department of Water Resources, 1977. North Monterey Water Resources Investigation.

Prepared pursuant to cooperative agreement between Department of Water Resources and Monterey County Flood Control and Water Conservation District, March 23, 1977.

California Department of Water Resources (DWR), 2003. California's Groundwater - Bulletin 118, Update 2003. Dated October, 1, 2003.

CDM, 2004. *Monterey Peninsula Water Management District Sand City Desalination Project Feasibility Study Executive Summary*. Dated March 25, 2004.

California Geological Survey, 2002. "Geologic Map of the Monterey 30'x 60' Quadrangle and Adjacent Areas"

Carman, P.C., 1956. "Flow of gases through porous media."

Chin, John, L., and Steven C. Wolf, 1988 "Reconnaissance high-resolution geophysical survey of the Monterey Bay, California, inner shelf: Implications for sand resources" USGS Open-File Report 88-410

Coastal Groundwater Consulting, 2012. *Natural Isotope Tracer Study Test Slant Well Phase 3 Extending Pumping Test, South Orange County Desalination Project*. Prepared for Metropolitan Water District of Orange County.

Durbin, T.J, G.W. Kapple, and J.R. Freckleton, 1978. Two Dimensional and Three Dimentional Digital Flow Models of the Salinas Valley Ground-Water Basin, California. United States Geological Survey Water-Resources Investigations 78-113.

Durbin, T.J., 2012. California-American Water Company – Comments on proposal to pumpgroundwater from the Salinas Valley groundwater basin. Prepared for the Salinas Valley Water Coalition.

Durbin, T., 2013, Conaway Ranch Groundwater Model – Power-Law Averaging of Hydraulic Conductivity. Draft Technical Memorandum, November 2013.

Dupré, William R., 1975. *Quaternary History of the Watsonville Lowlands North-Central Monterey Bay Region, California*.

Dupré, William R., 1990. *Quaternary Geology of the Monterey Bay Region California*. AAPG Pacific Section, 2009 – Geology and Tectonics of the Central California Coast Region.

Eittreim, S. L.; Anima, R. J.; Stevenson, A. J., 2002. Seafloor Geology of the Monterey Bay Area Continental Shelf. Marine Geology, 181: 3 – 34.

Emcon, 1991. Monterey Regional Waste Management District, Marina Class III Landfill Geologic and Hydrogeologic Study, Monterey County, California

Faunt, C.C., ed., 2009, Groundwater Availability of the Central Valley Aquifer, California: U.S. Geological Survey Professional Paper 1766, 225 p.

Fetter, C.W., 1994. *Applied Hydrogeology*

Feeney and Rosenberg, 2002. *Deep Aquifer Investigation – Hydrogeologic Data Inventory, Review, Interpretation and Implications* (TECHNICAL REVIEW DRAFT).

Freeze, R. Allen and John A. Cherry, 1979. Groundwater

Fugro West, Inc., 1995. *Volume I Hydrogeologic Study Seawater Intake/Brine Disposal System, Marina, California*. Prepared for Marina Coast Water District.

Fugro West, Inc., 1996a. *Marina Coast Water District Seawater Desalination Project: Initiation of Inland Groundwater Monitoring.*

Fugro West, Inc., 1996b. *Marina Coast Water District Seawater Desalination Project: Establishment of Monitoring Well Network*.

Fugro West, Inc., 1996c. *Summary of Operations Construction and testing of Seawater Intake Well and Brine Injection Well prepared for Marina Coast Water District.*

GEOSCIENCE Support Services, Inc., 2004. *Feasibility of Using HDD Wells to Supply Water for the CoastalWater Project Desalination Plant at Moss Landing*. Prepared for RBF Consulting / California American Water, August 3, 2004.

GEOSCIENCE Support Services, Inc., 2005. *Feasibility of Using HDD Wells for Water Supply and BrineDischarge for the Coastal Water Project Desalination Plant, North Marina Site.*

GEOSCIENCE Support Services, Inc., 2008. *North Marina Groundwater Model Evaluation of Potential Projects*.

GEOSCIENCE Support Services, Inc., 2010. *Summary of Historical Erosion Rates in the Vicinity of the Marina Coast Water District Office - Marina State Beach, Marina California*.

GEOSCIENCE Support Services, Inc., 2010. Sonic *Exploratory Soil Borings and Monitoring Well Completion,* prepared for the South Coast Water District.

GEOSCIENCE Support Services, Inc., 2013 *Hydrogeology Investigation and Subsurface Intake System Feasibility Evaluation Proposed Camp Pendleton Seawater Desalination Project – Technical Studies*

Greene, Gary H., 1970. *Geology of Southern Monterey Bay and its Relationship to Ground Water Basin and Sea Water Intrusion*. U.S. Geologic Survey Open-File Report.

Greene, Gary H., 1977. *Geology of the Monterey Bay Region*. U.S. Geologic Survey Open-File Report 77-718.

Greene, Gary H., 1990. *Regional Tectonics and Structural Evolution of the Monterey Bay Region, Central California. Geology and Tectonics of the Central California Coast Region, San Francisco to Monterey*. Pacific Section of the American Association of Petroleum Geologists. June.

Greene, Gary H, et al, 1991. Offshore and onshore liquefaction at Moss Landing spit, central California-result of the October 17, 1989 Loma Prieta earthquake-Geology, v19 p. 945-949, September 1991.

Grossman, E. E.; Eittreim, S. L.; Field, M. E.; Wong, F. L., 2006. Shallow Stratigraphy and Sedimentation History During High-frequency Sea-level Changes on the Central California Shelf. Continental Shelf Research, 26: 1217 – 1239.

Happle, J., 2010. Personal Communication. Research Associate Professor and Director, Rosentiel School of Marine and Atmospheric Science Tritium Laboratory, University of Miami, Florida.

Harding Lawson Associates (HLA), 1994. *Final Basewide Remedial Investigation/Feasibility Study (RI/FS), Fort Ord, California, Volume II, Remedial Investigation Basewide Hydrogeologic Characterization, Appendixes, Appendix D: Ford Ord Groundwater Model.*

Harding Lawson Associates (HLA), 2001. *Final Report: Hydrogeologic Investigation of the Salinas Valley Basin in the Vicinity of Fort Ord and Marina, Salinas Valley, California.*

Hornberger, Michelle I, 1991. *Paleoenvironment of Elkhorn Slough and Surrounding Wetland Habitats: a geological study using an ecological approach*. San Jose State Master's Thesis.

JGOFS (Joint Global Ocean Flux Study). 1997. *Chapter 5, Physical and Thermodynamic Data. Version 2.13.*

Johnson, M., 1983. Ground Water in North Monterey County, California, 1980. U.S.G.S.Water-Resources Investigations Report 83-4023.

Kazemi, G.A., Lehr, J.H., and Perrochet, Pierre, 2006. Groundwater Age: Hoboken, NJ, John Wiley & Sons, Inc.

Kennedy-Jenks Consultants, 2004. *Hydrostratigraphic Analysis of the Northern Salinas Valley*.

Kozeny J., 1927. "Ueber kapillare Leitung des Wassers im Boden." Sitzungsber Akad. Wiss.

Krumbein, W.C., and G.G. Monk, 1942. "Permeability as a Function of the Size of Unconsolidated Sand."

Monterey County Water Resources Agency, 2011. "Salinas Valley Basin- Lines of Equal Groundwater Elevation in the Pressure 180-Foot and East Side Shallow Aquifers

Monterey County Water Resources Agency, 2011. "Salinas Valley Basin- Lines of Equal Groundwater Elevation in the 400-Foot and East Side Deep Aquifers

Montgomery Watson, 1994. *Salinas River Basin Water Resources Management Plan Task 1.09 Salinas Valley Groundwater Flow and Quality Model Report*. Prepared for Monterey County Water Resources Agency. Dated February 1994.

Montgomery Watson, 1997. Final *Report – Salinas Valley Integrated Ground Water and Surface ModelUpdate*. Prepared for Monterey County Water Resources Agency. Dated May 1997.

Neuendorf, Klaus K.E., James P. Mehl Jr., Julia A. Jackson, 2005. Glossary of Geology, Fifth Edition, American Geological Institute.

RBF Consulting, 2012. *Contingency Planning for the Monterey Peninsula Water Supply Project*. Prepared for California American Water.

Reading, H.G. editor, 1978. Sedimentary Environments-Processes, Facies, and Stratigraphy. Third edition. Published by Blackwell Science.

Reading, H. G. (1996). Sedimentary Environments and Facies. Blackwell Scientific Publications.

RMC Geoscience, 2013. "Monterey Peninsula Landfill Second 2013 Semiannual Water Quality Monitoring Report, April 2013-September 2013

Shlemon, R. J., 1978*. Late Quaternary Evolution of the Camp Pendleton-San Onofre State Beach Coastal Area, Northwestern San Diego County, California*. Prepared for: Southern California Edison Company and San Diego Gas and Electric Company.

Shlemon, R.J., 1979. *Late Pleistocene Channel of the Lower Santa Margarita River, San Diego County, California. Geological Guide of the San Onofre Nuclear Generating Station and Adjacent Regions of Southern California*. Pacific Sections, American Association of Petroleum Geologists Society.

Shore Stations Monitoring Program. 2014. Active Stations. Granite Canyon Monitoring Station. fttp://ccsweb1.ucsd.edu/shore/active_data/granite_canyon/salinity

Staal, Garner, and Dunne, Inc. (SGD), 1991. Feasibility Study – Seawater Intake Wells Marina County Water District Wastewater Treatment Facility, Marina, California. Prepared for Marina County Water District. February.

Staal, Garner, and Dunne, Inc. (SGD), 1992. Feasibility Study – Saline Ground Water Intake System

Monterey Sand Company Site, Marina, California. Prepared for Monterey Peninsula Water Management District. February.

Tinsley, John III, 1975. *Quaternary Geology of the Northern Salinas Valley, Monterey County, California*.

Tinsley, John III, (2014) Personal Communication.

Tritium Laboratory, 2010. General Comments on Tritium Results. University of Miami Tritium Laboratory, Rosenstiel School of Marine and Atmospheric Science, Miami, Florida.California Department of Public Works, Water Resources Division, 1946. Salinas Basin Investigation, Bulletin 52.

United States Department of Commerce (DOC), National Oceanic and Atmospheric Administration (NOAA), National Ocean Service (NOS), and National Geodetic Survey (NGS), 2011. Continually Updated Shoreline Shapefile.

United States Geological Survey, 1983. *Ground Water in North Monterey County, California, 1980. U.S.G.S. Water-Resources Investigations.* Report 83-4023. Prepared in cooperation with the Monterey County Flood Control and Water Conservation District. Dated July 1983.

United States Geological Survey, 1988. *Reconnaissance High-resolution Geophysical Survey of the Monterey Bay, California, Inner Shelf--Implications for Sand Resources*. Chin, J. L.; Wolf, S. C., USGS Open-File Report: 88-410.

United States Geological Survey, 1991. *Molluscan and Foraminerferal Evidence of Late Pleistocene Sea Level lowstand in Monterey Bay, Central California*.

United States Geological Survey, 2002a. *Seafloor Rocks and Sediments of the Continental Shelf from Monterey Bay to Point Sur, California.* by Eittreim, S.L., Anima, R.J., Stevenson, A.J., and Wong, F.L. USGS Miscellaneous Field Studies Map-2345.

United States Geological Survey, 2002b. *Geohydrology of a Deep-Aquifer System Monitoring Well Site in Marina, Monterey County, California*. Water Resources Investigation Report 02-4003.

United States Geological Survey, 2003. *Geohydrologic Framework of Recharge and Seawater Intrusionin the Pajaro Valley, Santa Cruz and Monterey Counties, California*. U.S.G.S. Water-Resources Investigations. Report 03-4096.

United States Geological Survey, Hapke C., Reid, D., 2006. *National Assessment of Shoreline Change: AGIS Compilation of Vector Shorelines and Associated Shoreline Change Data for the Sandy Shorelines of the California Coast.* Open File Report-1251, 2006.

United States Geological Survey, Hapke C., Reid, D., and Borrelli, M., 2007 revised 2008. *NationalAssessment of Shoreline Change: A GIS Compilation of Vector Cliff Edge and Associated Cliff Erosion Data for the California Coast*. Open File Report-1112, 2008.

United States Geological Survey, 2009. *Map of the Rinconada and Reliz Fault Zones, Salinas River Valley, California*. Scientific Investigations Report 3059.

United States Geological Survey, 2002. *Isostatic Gravity Map of the Monterey 30'x60' Quadrangle and Adjacent Areas, California* USGS Open-File Report 02-373.

Vengosh, A. et. Al. 2002. A Multi-isotope (B, Sr, O, H, and C) and age dating (^{3}H-^{3}He and ^{14}C) study of ground water from Salinas Valley, California: Hydrochemistry, dynamics, and contamination processes. Water Resources Research, Vol. 38, No.1.

Water Resources and Information Management Engineering, Inc. (WRIME), 2003. *Deep Aquifer Investigative Study*. Prepared for the Marina Coast Water District.

Wong, F. L.; Eittreim, S. L., 2001. Continental Shelf GIS for the Monterey Bay National Marine Sanctuary. USGS Open-File Report 01-179.

FIGURES

GEOSCIENCE

CALIFORNIA AMERICAN WATER &
RBF CONSULTING

MONTEREY PENINSULA WATER SUPPLY PROJECT HYDROGEOLOGIC INVESTIGATION
ATTACHMENT 1 - TECHNICAL MEMORANDUM (TM 1) - SUMMARY OF RESULTS - EXPLORATORY BOREHOLES

GENERAL
PROJECT LOCATION

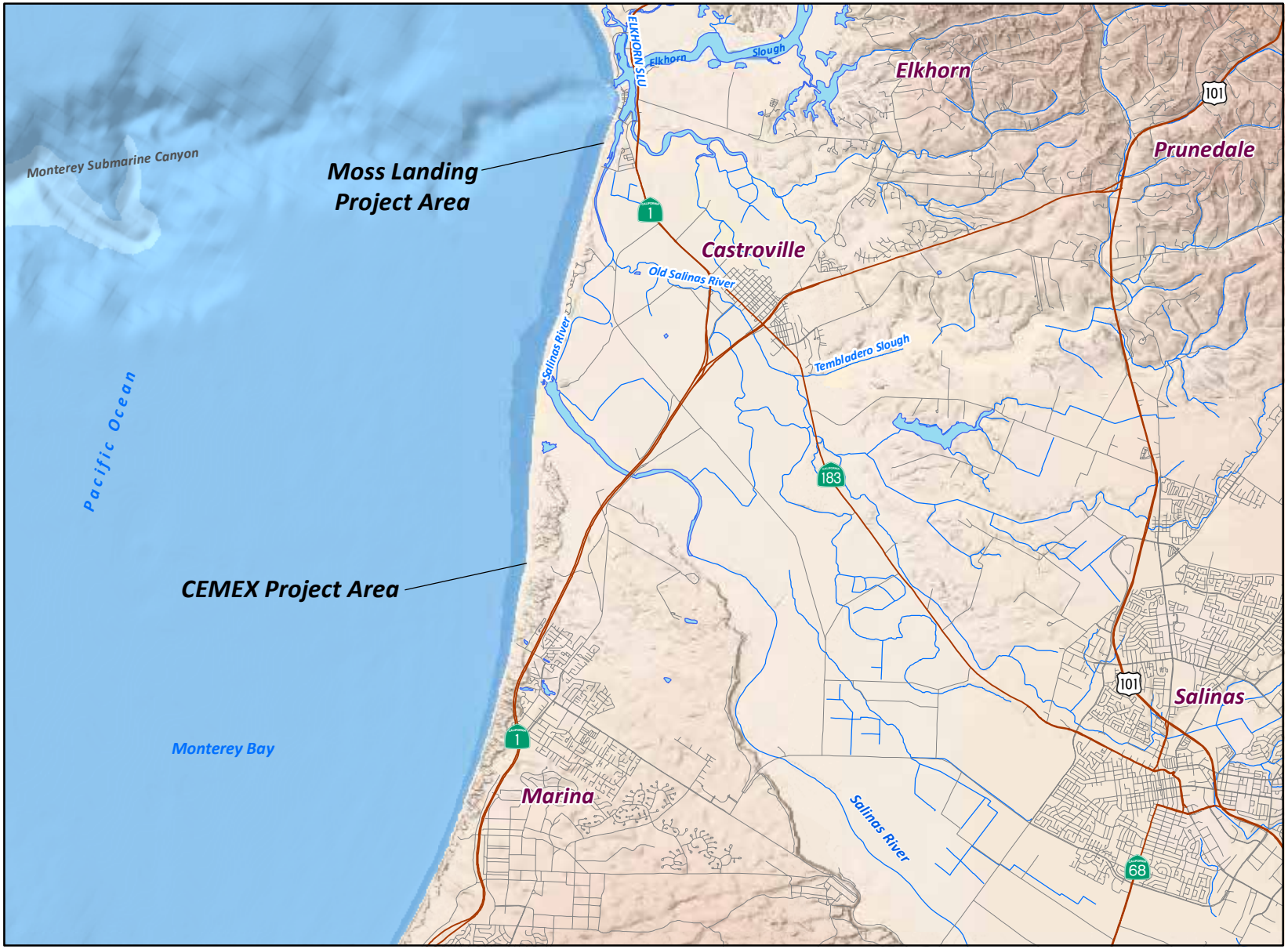

GEOSCIENCE
GEOSCIENCE Support Services, Inc.
P.O. Box 220, Claremont, CA 91711
Tel: (909) 451-6650 Fax: (909) 451-6638
www.gssiwater.com

8-Jul-14

Prepared by: DWB. Map Projection: State Plane 1983, Zone IV.

© 2014, GEOSCIENCE Support Services, Inc. All rights reserved.

NORTH

0 2 4 Miles

Figure 1

GIS_proj/mcwsp_cal_am/rbf_boring_tech_memo_7-14/4_Fig_1_gen_loc_8x11_7-14.mxd



GENERAL NOTES:

1. LOCATION OF EXISTING FACILITIES SHOWN ON THIS MAP IS APPROXIMATE AND INTENDED FOR PURPOSES OF BIDDING. CONTRACTOR IS RESPONSIBLE FOR VERIFYING ACTUAL LOCATION PRIOR TO CONSTRUCTION.

PROPOSED EXPLORATORY BORING LOCATIONS

EXISTING WELLS

NORTH

0 1000 2000 3000

APPROXIMATE HORIZONTAL SCALE (FEET)

GEOSCIENCE

"SETTING THE STANDARD IN WATER WELL DESIGN SINCE 1978"

909.451.6650 | gssiwater.com

MONTEREY PENINSULA WATER SUPPLY PROJECT

HYDROGEOLOGIC INVESTIGATION REPORT -ATTACHMENT 1

GENERAL LOCATION OF MOSS LANDING, POTRERO RD, AND CEMEX AREAS

Rev.	Date	By	Description
1			
2			
3			
4			

Date: 08-JUL-14

Designed: MDW

Checked: DEW

File: MSL-CLAM-3-0.dwg

FIGURE 2



LEGEND:

PROPOSED EXPLORATORY BORING LOCATIONS

UPPER CEMEX WELL

NORTH

0 800 1600

APPROXIMATE HORIZONTAL SCALE (FEET)

GEOSCIENCE "SETTING THE STANDARD IN WATER WELL DESIGN SINCE 1978" 909.451.6650 | gssiwater.com	MONTEREY PENINSULA WATER SUPPLY PROJECT HYDROGEOLOGIC INVESTIGATION REPORT -ATTACHMENT 1 PROPOSED CEMEX AREA BOREHOLES	Date: 08-JUL-14 Designed: MDW Checked: DEW File: MSL-CLAM-3-4.dwg	FIGURE 3



LEGEND:

PROPOSED EXPLORATORY BORING LOCATIONS

NORTH

0 200 400

APPROXIMATE HORIZONTAL SCALE (FEET)

GEOSCIENCE

"SETTING THE STANDARD IN WATER WELL DESIGN SINCE 1978"

909.451.6650 | gssiwater.com

MONTEREY PENINSULA WATER SUPPLY PROJECT

HYDROGEOLOGIC INVESTIGATION REPORT -ATTACHMENT 1

MOSS LANDING HARBOR AREA BOREHOLES

Date: 08-JUL-14

Designed: MDW

Checked: DEW

File: MSL-CLAM-3-5.dwg

FIGURE 4

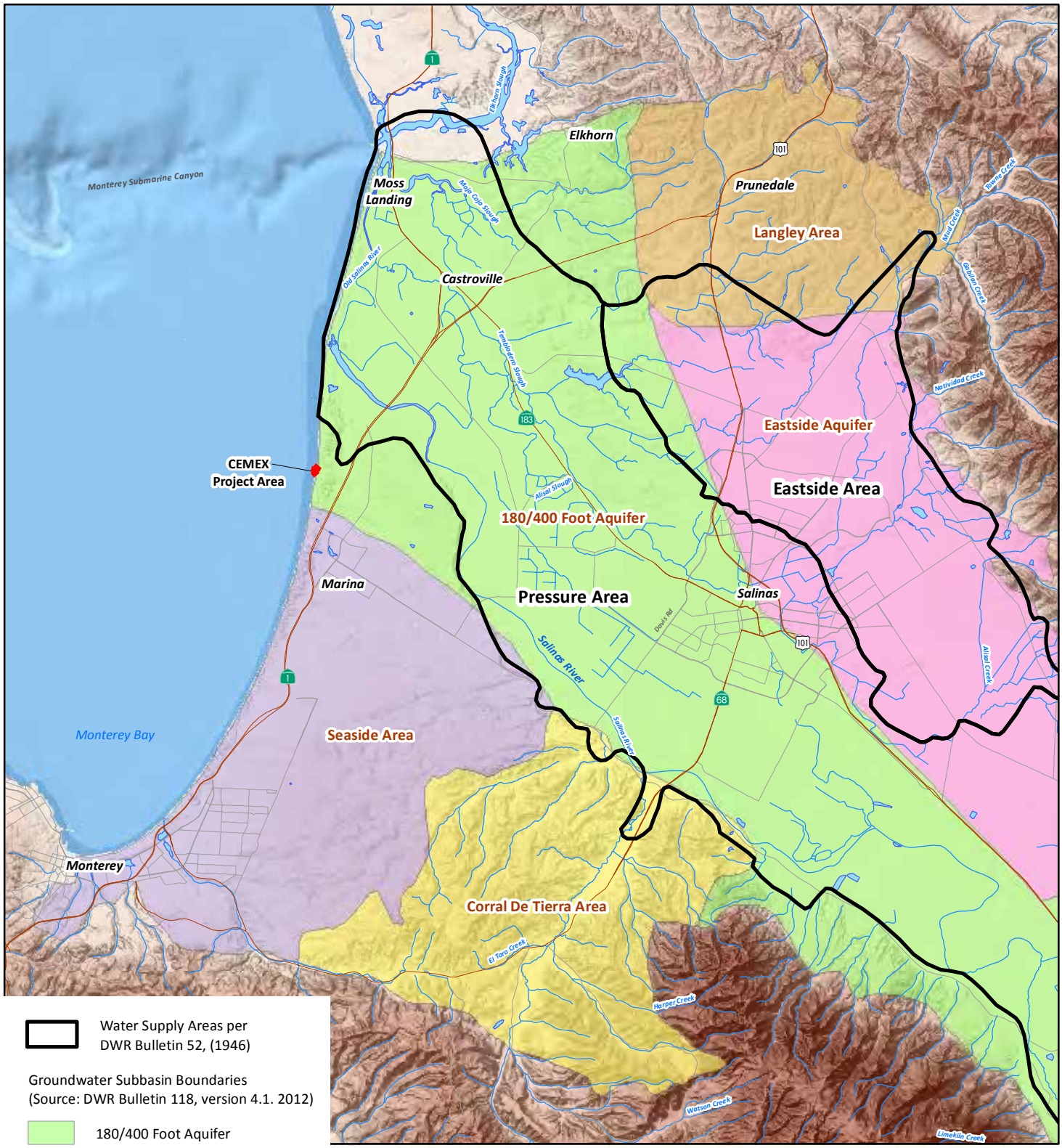

Water Supply Areas per DWR Bulletin 52, (1946)

Groundwater Subbasin Boundaries
(Source: DWR Bulletin 118, version 4.1. 2012)

- 180/400 Foot Aquifer
- Corral De Tierra Area
- Eastside Aquifer
- Langley Area
- Seaside Area

DWR 1946 AND 2012 GROUNDWATER SUBBASIN BOUNDARIES

NORTH

0 2 4 Miles

8-Jul-14

© 2014, GEOSCIENCE Support Services, Inc. All rights reserved.

GEOSCIENCE Support Services, Inc.
P.O. Box 220, Claremont, CA 91711
Tel: (909) 451-6650 Fax: (909) 451-6638
www.gssiwater.com

Figure 5

GIS_proj/mcwsp_cal_am/rbf_boring_tech_memo_7-14/4_Fig_5_subbasin_bndys_8X11_7-14.mxd

GEOLOGIC SETTING

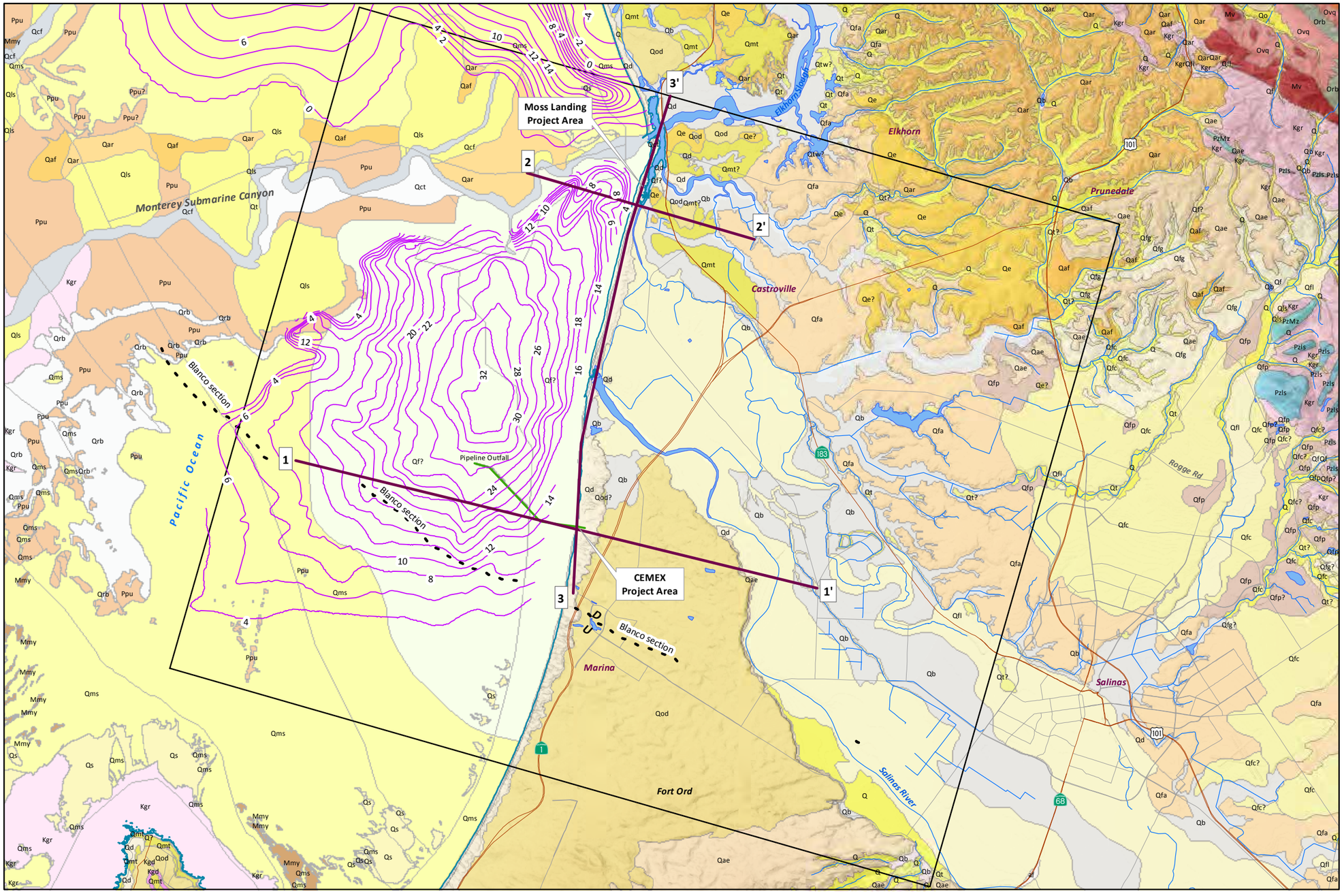

EXPLANATION

- 1 — 1' Cross-Section Location (See Figures 7a-9)
- Holocene Sediment Thickness (meters) Source (USGS OFR 01-179)
- Fault - Blanco Section of the Reliz Fault (Source: USGS SIM 3059)
- Pipeline Outfall
- North Marina Groundwater Model Boundary
- -10- Elevation of Sea Floor, meters (Wong, F.L. and Eittreim, S.L., 2001)
- Mean High Tide (DOC et al., 2011)

Geology from: (California Geological Survey. "Geologic Map of the Monterey 30'x60' Quadrangle and Adjacent Areas, California. Regional Geologic Map Series, 1:100,000 Scale. Map No. 1. 2002). See Figure 2b for Geologic Legend.

8-Jul-14

Prepared by: DWB. Map Projection: State Plane 1983, Zone IV.

NORTH

0 2 4 Miles

© 2014, GEOSCIENCE Support Services, Inc. All rights reserved.

GEOSCIENCE Support Services, Inc.
P.O. Box 220, Claremont, CA 91711
Tel: (909) 451-6650 Fax: (909) 451-6638
www.gssiwater.com

Figure 6a

GIS_proj/mcwsp_cal_am/rbf_boring_tech_memo_7-14/4_Fig_6a_geology_7-14.mxd

California Geological Survey
GEOLOGIC MAP OF THE MONTEREY 30'x60' QUADRANGLE
AND ADJACENT AREAS, CALIFORNIA
Compiled by David L. Wagner, H. Gary Greene, George J. Saucedo and Cynthia L. Pridmore. 2002

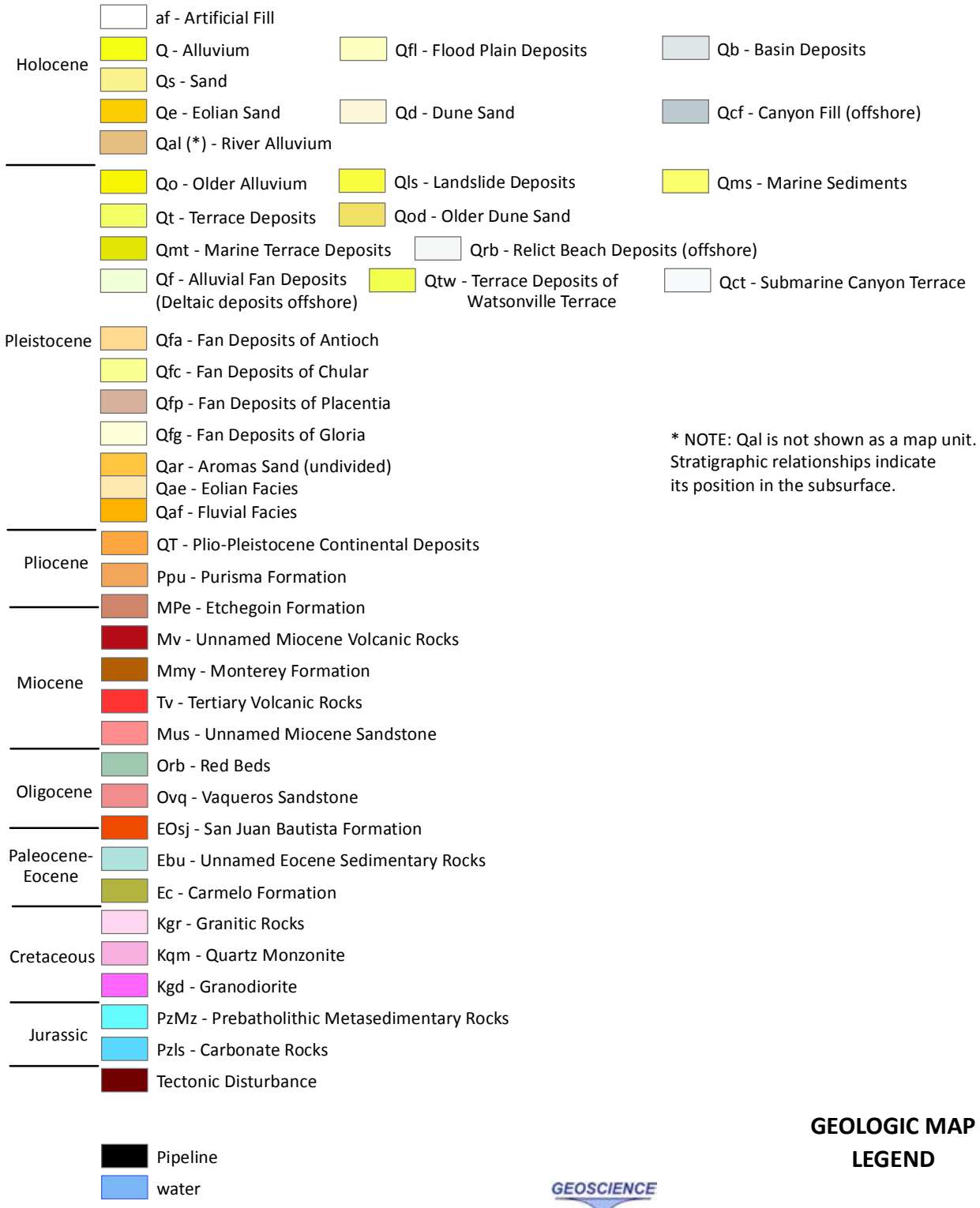

GEOSCIENCE LEGEND

GEOSCIENCE Support Services, Inc.
P.O. Box 220, Claremont, CA 91711
Tel: (909) 451-6650 Fax: (909) 451-6638
www.gssiwater.com

8-Jul-14

Figure 6b

© 2014, GEOSCIENCE Support Services, Inc. All rights reserved.

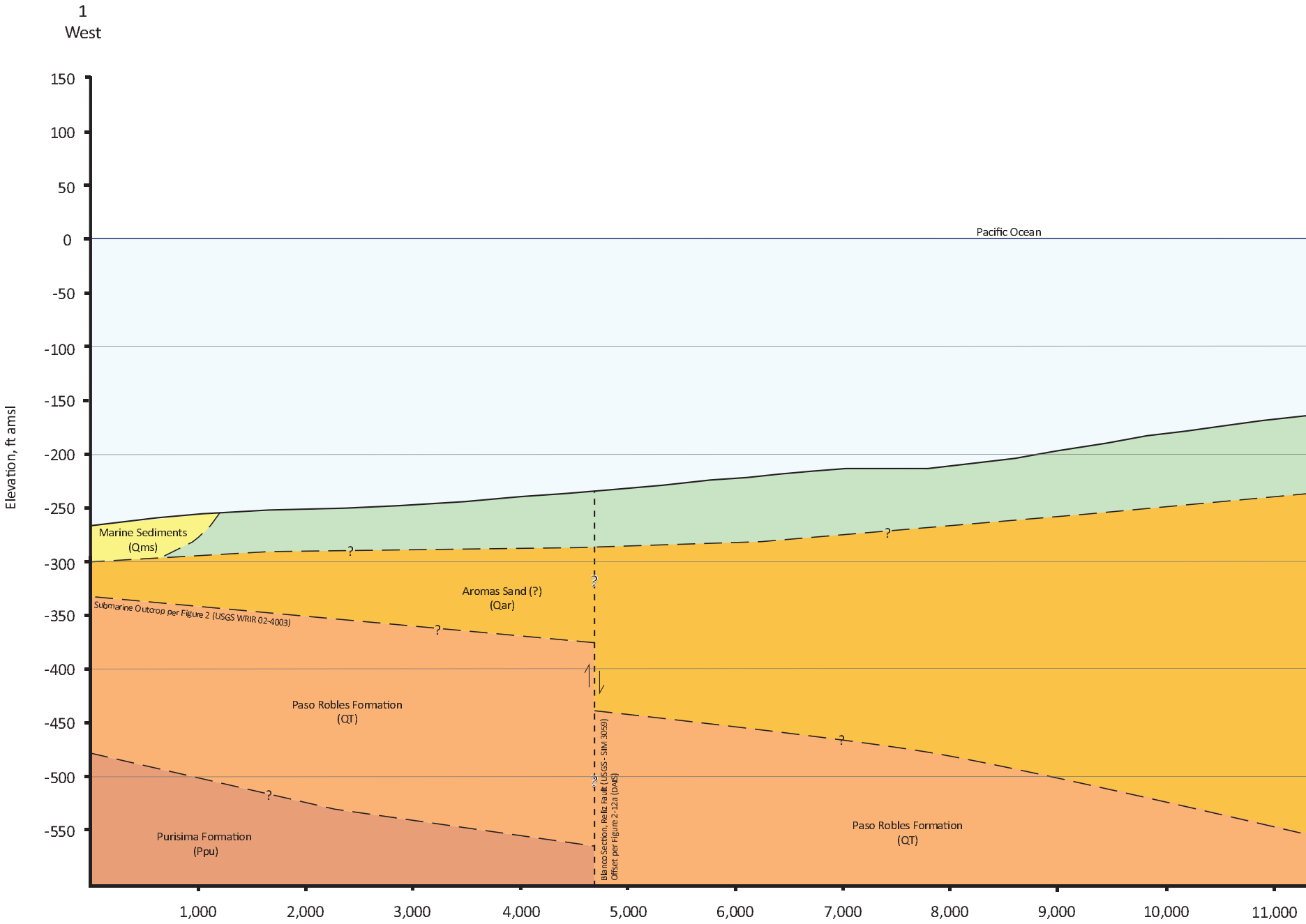
1
West
150
100
50
0
-50
-100
-150
-200
-250
-300
-350
-400
-450
-500
-550
Elevation, ft amsl
Pacific Ocean
Marine Sediments
(Qms)
?
?
Aromas Sand (?)
(Qar)
?
Submarine Outcrop per Figure 2 (USGS WRIR 02-4003)
?
Paso Robles Formation
(QT)
?
?
Purisima Formation
(Ppu)
?
Blanco Section, Reliz Fault (USGS - SIM 3059)
Offset per Figure 2-12a (DAIS)
Paso Robles Formation
(QT)
1,000
2,000
3,000
4,000
5,000
6,000
7,000
8,000
9,000
10,000
11,000

Source: Kennedy Jenks, 2004.

Projects\MONTEREY AREA DESAL STUDIES\02)ESA_and_ESA-CalAm\11) Logs_x-sections\GSSI_cross-sections_11-13\Fig_7a_LARGE_x-section_1-1'_May-14.ai

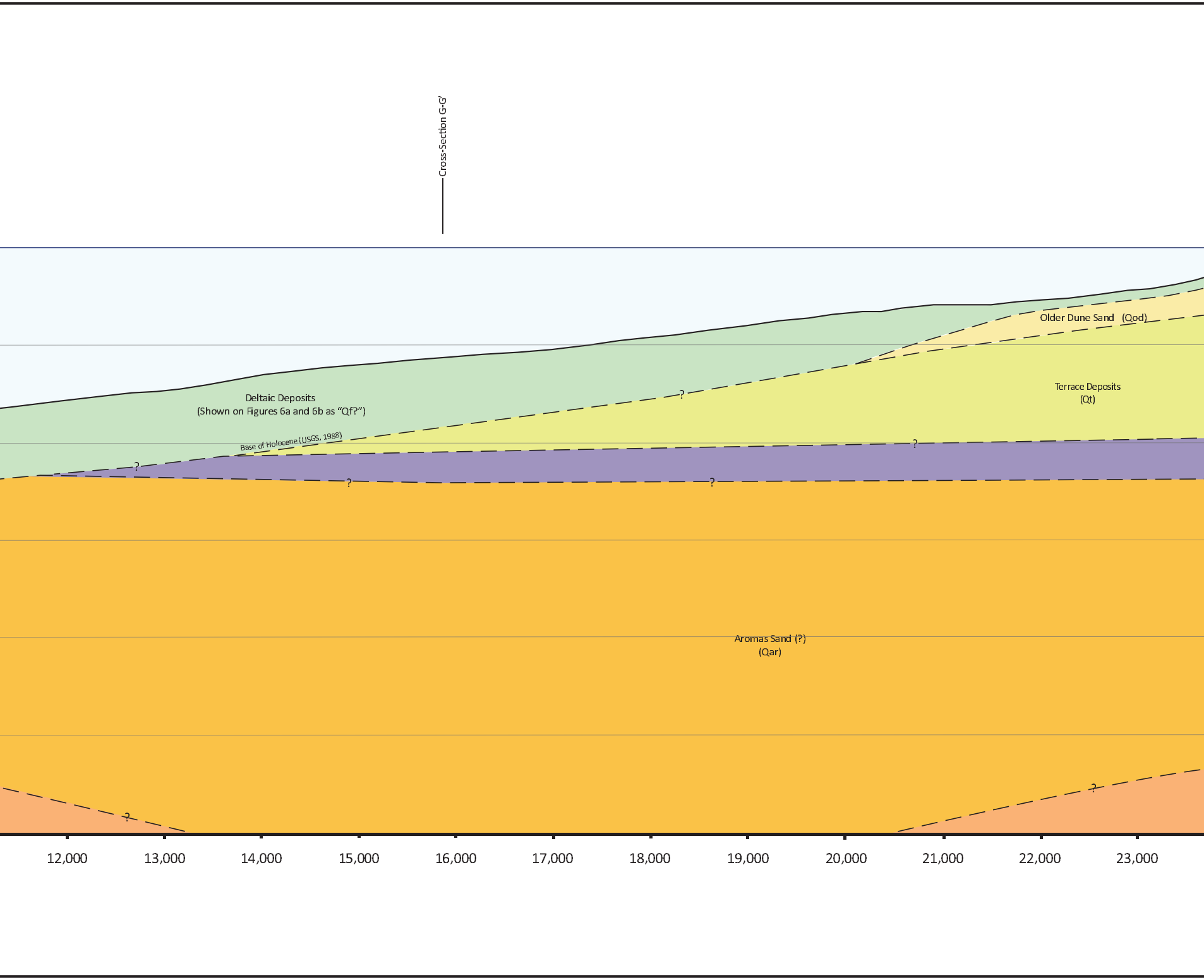
Cross-Section G-G'
Older Dune Sand (Qod)
Terrace Deposits
(Qt)
Deltaic Deposits
(Shown on Figures 6a and 6b as "Qf?")
Base of Holocene (USGS, 1988)
?
?
?
?
?
Aromas Sand (?)
(Qar)
?
?
12,000
13,000
14,000
15,000
16,000
17,000
18,000
19,000
20,000
21,000
22,000
23,000

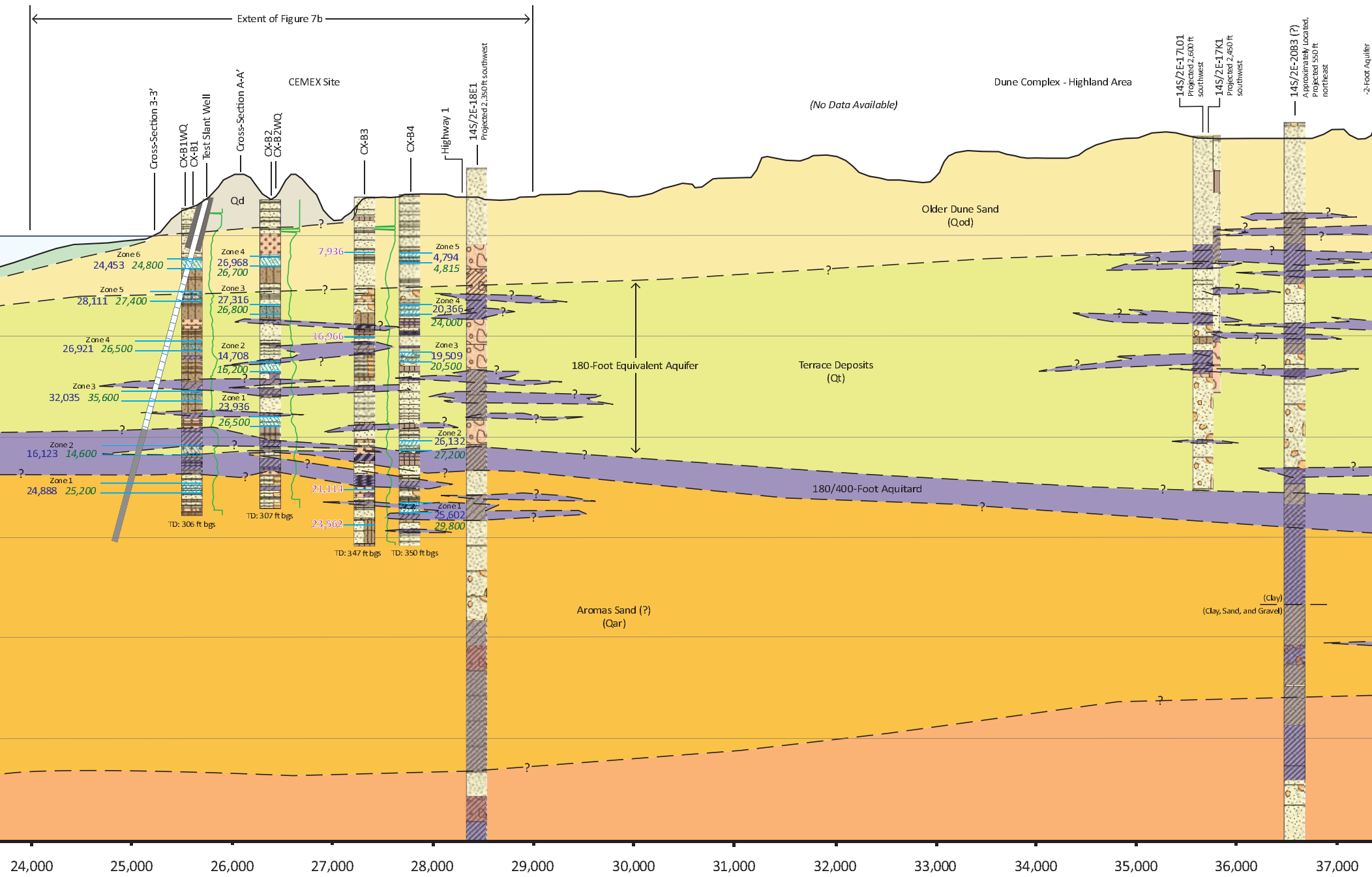
Extent of Figure 7b
CEMEX Site
Cross-Section 3-3'
CX-B1WQ
CX-B1
Test Slant Well
Cross-Section A-A'
CX-B2
CX-B2WQ
CX-B3
CX-B4
Highway 1
14S/2E-18E1
Projected 2,350 ft southwest
(No Data Available)
Dune Complex - Highland Area
14S/2E-17L01
Projected 2,600 ft southwest
14S/2E-17K1
Projected 2,450 ft southwest
14S/2E-20B3 (?)
Approximately Located, Projected 550 ft northeast
-2-Foot Aquifer
Qd
Older Dune Sand
(Qod)
Zone 6
24,453 24,800
Zone 5
28,111 27,400
Zone 4
26,921 26,500
Zone 3
32,035 35,600
Zone 2
16,123 14,600
Zone 1
24,888 25,200
TD: 306 ft bgs
Zone 4
26,968
26,700
Zone 3
27,316
26,800
Zone 2
14,708
16,200
Zone 1
23,936
26,500
TD: 307 ft bgs
7,936
16,966
21,114
23,562
TD: 347 ft bgs
Zone 5
4,794
4,815
Zone 4
20,366
24,000
Zone 3
19,509
20,500
Zone 2
26,132
27,200
Zone 1
25,602
29,800
TD: 350 ft bgs
180-Foot Equivalent Aquifer
Terrace Deposits
(Qt)
180/400-Foot Aquitard
Aromas Sand (?)
(Qar)
(Clay)
(Clay, Sand, and Gravel)
?
24,000
25,000
26,000
27,000
28,000
29,000
30,000
31,000
32,000
33,000
34,000
35,000
36,000
37,000

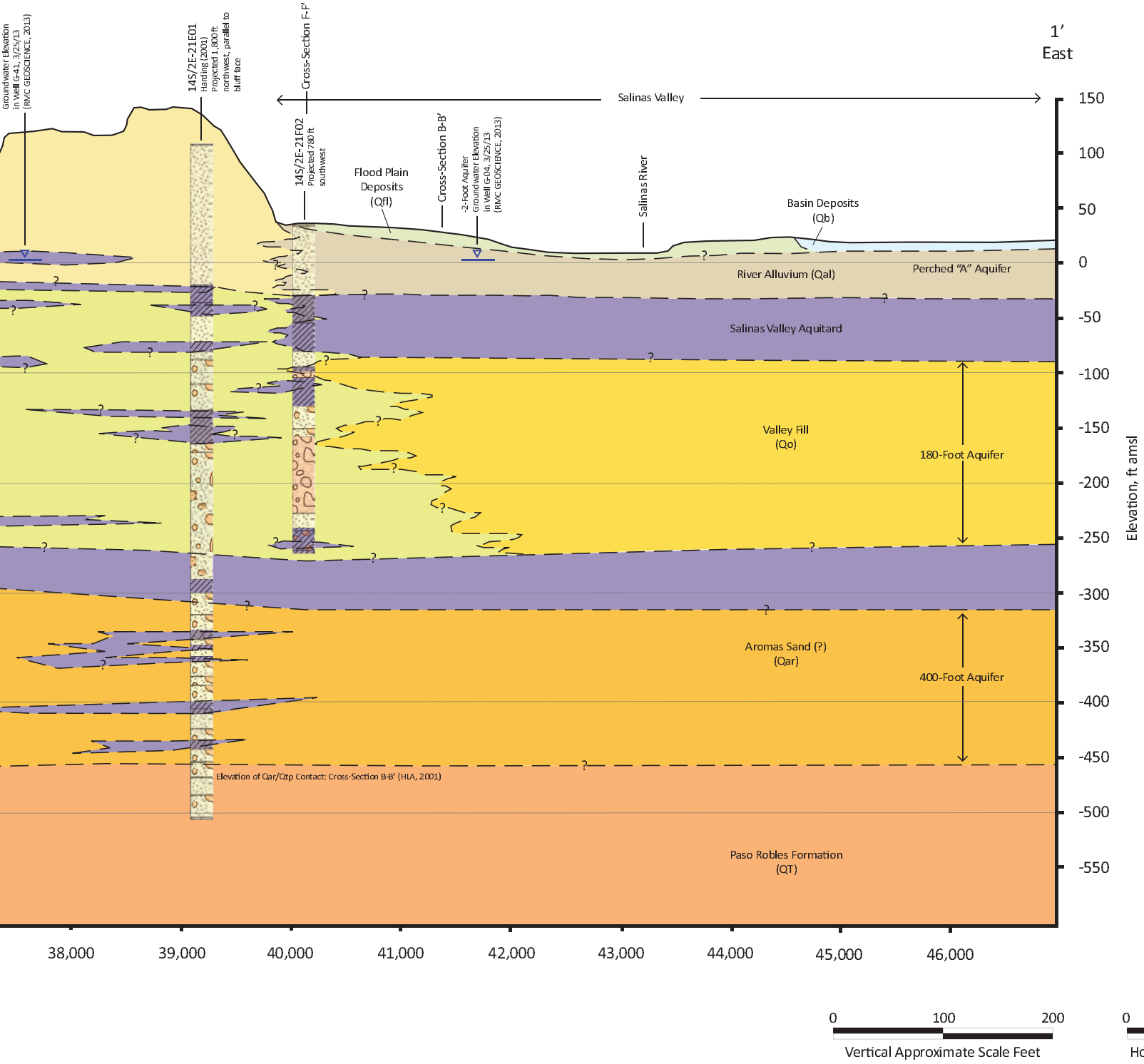
Groundwater Elevation in Well G-41, 3/25/13 (RMC GEOSCIENCE, 2013)
14S/2E-21E01 Harding (2001) Projected 1,800 ft northwest, parallel to bluff face
Cross-Section F-F'
14S/2E-21F02 Projected 780 ft southwest
Flood Plain Deposits (Qfl)
Cross-Section B-B'
-2-Foot Aquifer Groundwater Elevation in Well G-04, 3/25/13 (RMC GEOSCIENCE, 2013)
Salinas River
Salinas Valley
Basin Deposits (Qb)
1'
East
River Alluvium (Qal)
Perched "A" Aquifer
Salinas Valley Aquitard
Valley Fill (Qo)
180-Foot Aquifer
Aromas Sand (?) (Qar)
400-Foot Aquifer
Elevation of Qar/Qtp Contact: Cross-Section B-B' (HLA, 2001)
Paso Robles Formation (QT)
150
100
50
0
-50
-100
-150
-200
-250
-300
-350
-400
-450
-500
-550
Elevation, ft amsl
38,000
39,000
40,000
41,000
42,000
43,000
44,000
45,000
46,000
0
100
200
Vertical Approximate Scale Feet

0 1,000 2,000

Horizontal Approximate Scale Feet

Explanation

Holocene

- ▭ Qfl
- ▭ Qb
- ▭ Qd
- ▭ Qal

Pleistocene

- ▭ Qo
- ▭ Qms
- ▭ Qt
- ▭ Qod
- ▭ Qmt
- ▭ Qf
- ▭ Qar

Pliocene

- ▭ QT
- ▭ Ppu

- ▭ Clay Layer

- —?— Geologic Contact (approximate)
- - ? - Inferred Fault
- Arrows on fault show direction of movement
- ▽ Groundwater Elevation
- Borehole/Well with lithology (see Appendix A1 for Borehole Lithologic Logs and Appendix A2 for Well Logs)
- CLID Geophysical Log [mmho/m] (see Appendix A1) 1500 0
- Proposed Test Slant Well
  - Cement Seal
  - Blank
  - Screen

Water Quality (TDS) Measurements

Measured Value [mg/L]

Field	Lab	Field Pore Water	Zone 6 Sampled Zone
23,963	24,800	23,562	▨

(For field measurements, see Appendix F, for lab samples, see Appendix G, for field pore water samples, see text)

GEOSCIENCE

GEOSCIENCE Support Services, Incorporated
P.O. Box 220, Claremont, CA 91711
Tel: (909) 451-6650 Fax: (909) 451-6638
www.gssiwater.com

CALIFORNIA AMERICAN WATER & RBF CONSULTING

GEOLOGIC CROSS-SECTION 1-1'

Drawn: LC
Checked:
Approved:
Date: 8-Jul-14

Figure 7a

Station 24,000 ft of Cross-Section 1-1' (WEST)

Station 30,000 ft of Cross-Section 1-1' (EAST)

Elevation, ft amsl

Cross-Section 3-3'
CX-B1WQ
CX-B1
Test Slant Well
Cross-Section A-A'
CX-B2
CX-B2WQ
CX-B3
CX-B4
Highway 1
14S/2E-18E1
Projected 2,350 ft southwest

Pacific Ocean
Deltaic Deposits (Qf)
Dune Sand (Qd)
Older Dune Sand (Qod)
Terrace Deposits (Qt)
180-Foot Equivalent Aquifer
180/400-Foot Aquitard
400-Foot Aquifer
Aromas Sand (?) (Qar)
Paso Robles Formation (QT)

Zone 6 24,453 24,800
Zone 5 28,111 27,400
Zone 4 26,921 26,500
Zone 3 32,035 35,600
Zone 2 16,123 14,600
Zone 1 24,888 25,200
TD: 306 ft bgs

Zone 4 26,968 26,700
Zone 3 27,316 26,800
Zone 2 14,708 16,200
Zone 1 23,936 26,500
TD: 307 ft bgs

7,936
16,966
21,114
23,562
TD: 347 ft bgs

Zone 5 4,794 4,815
Zone 4 20,366 24,000
Zone 3 19,509 20,500
Zone 2 26,132 20,500
Zone 1 25,602 20,500
TD: 350 ft bgs

Explanation

Holocene: Qd
Pleistocene: Qt, Qod, Qf, Qar
Pliocene: QT
Clay Layer

Geologic Contact (approximate)

Borehole with lithology (see Appendix A1 for Borehole Lithologic Logs and Appendix A2 for Well Logs)

CLID Geophysical Log [mmho/m] (see Appendix A)
1500 0

Proposed Test Slant Well
Cement Seal
Blank
Screen

Water Quality (TDS) Measurements
Measured Value [mg/L]
Field 23,963 | Lab 24,800 | Field Pore Water 23,562 | Zone 6 Sampled Zone
(For field measurements, see Appendix F, for lab samples, see Appendix G)

24,000 25,000 26,000 27,000 28,000 29,000 30,000

0 100 200
Vertical Approximate Scale Feet

0 500 1,000
Horizontal Approximate Scale Feet

GEOSCIENCE
GEOSCIENCE Support Services, Incorporated
P.O. Box 220, Claremont, CA 91711
Tel: (909) 451-6650 Fax: (909) 451-6638
www.gsswater.com

CALIFORNIA AMERICAN WATER & RBF CONSULTING

CEMEX AREA PORTION OF GEOLOGIC CROSS-SECTION 1-1'

Drawn: LC
Checked:
Approved:
Date: 8-Jul-14

Figure 7b

Projects\MONTEREY AREA DESAL STUDIES\02)ESA_and_ESA-CalAm\11) Logs_x-sections\GSSI_cross-sections_11-13\Fig_7b_x-section_1-1'_CEMEXarea_May-14.ai

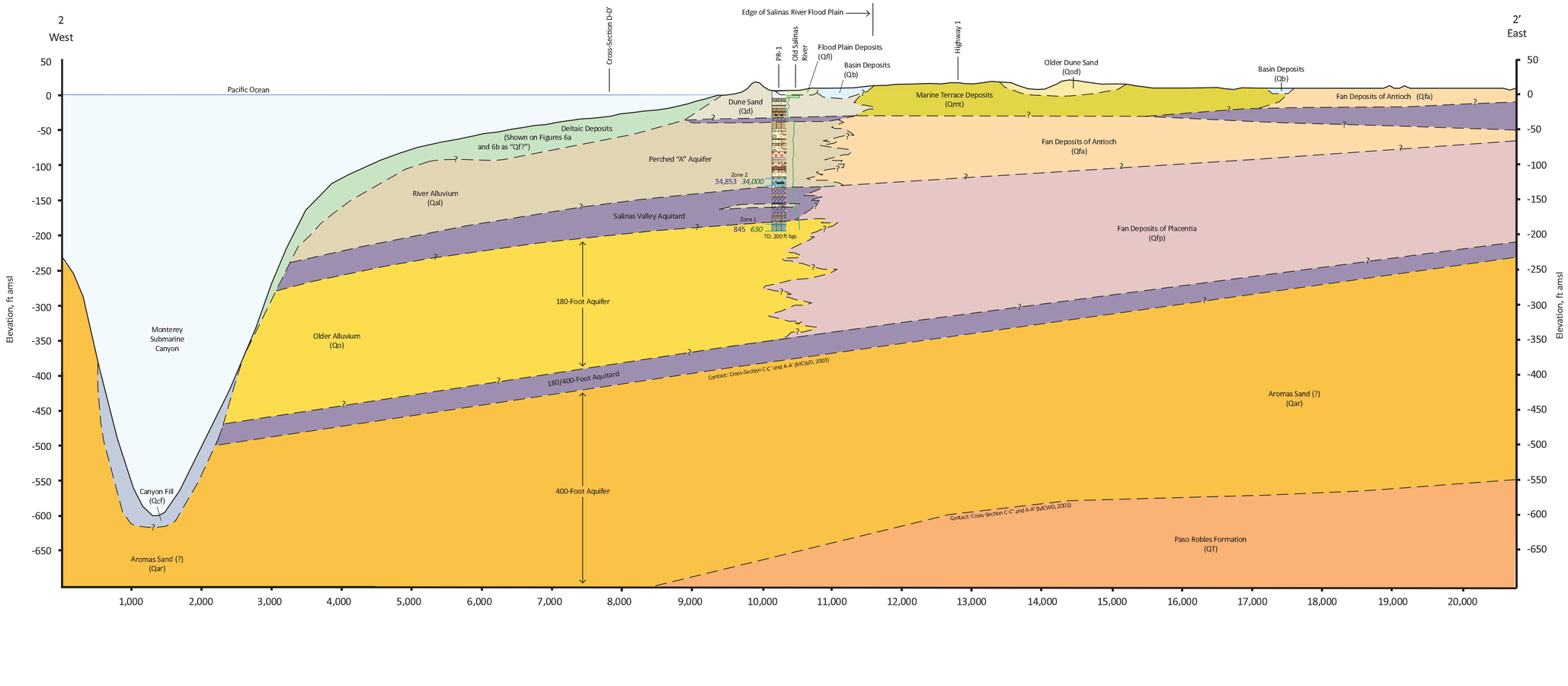

GEOSCIENCE
GEOSCIENCE Support Services, Incorporated
2252 Main Street, Suite C-211
Bonita, CA 91902
Tel: (909) 451-6650 Fax: (909) 451-6638
www.gsiwater.com

CALIFORNIA AMERICAN WATER & RBF CONSULTING

GEOLOGIC CROSS-SECTION 2-2'

Drawn: LC
Checked:
Approved:
Date: 8-Jul-14

Figure 8

Projects\MONTEREY AREA DESAL STUDIES\02\ESA_and_ESA-CalAm\11) Logs_x-sections\GSSI_cross-sections_11-13\Fig_8_LARGE_x-section_2-2'_May-14.ai

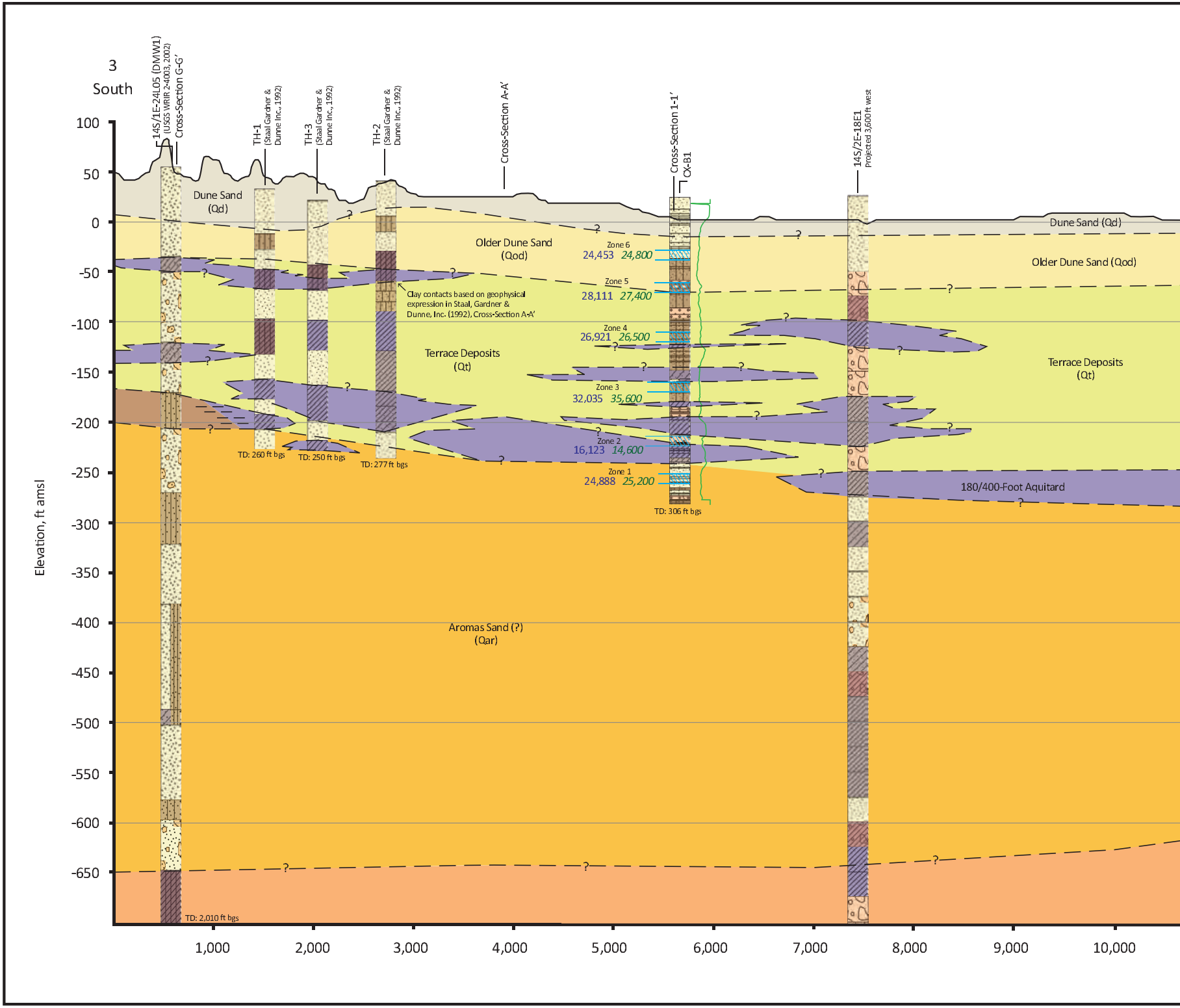
3
South
14S/1E-24L05 (DMW1)
(USGS WRIR 2-4003, 2002)
Cross-Section G-G′
TH-1
(Staal Gardner & Dunne Inc., 1992)
TH-3
(Staal Gardner & Dunne Inc., 1992)
TH-2
(Staal Gardner & Dunne Inc., 1992)
Cross-Section A-A′
Cross-Section 1-1′
CX-B1
14S/2E-18E1
Projected 3,600 ft west
Dune Sand (Qd)
Older Dune Sand (Qod)
Terrace Deposits (Qt)
Dune Sand (Qd)
Older Dune Sand (Qod)
Terrace Deposits (Qt)
180/400-Foot Aquitard
Aromas Sand (?) (Qar)
Clay contacts based on geophysical expression in Staal, Gardner & Dunne, Inc. (1992), Cross-Section A-A′
Zone 6
24,453 24,800
Zone 5
28,111 27,400
Zone 4
26,921 26,500
Zone 3
32,035 35,600
Zone 2
16,123 14,600
Zone 1
24,888 25,200
TD: 260 ft bgs
TD: 250 ft bgs
TD: 277 ft bgs
TD: 306 ft bgs
TD: 2,010 ft bgs
?
Elevation, ft amsl
100
50
0
-50
-100
-150
-200
-250
-300
-350
-400
-450
-500
-550
-600
-650
1,000
2,000
3,000
4,000
5,000
6,000
7,000
8,000
9,000
10,000

Projects\MONTEREY AREA DESAL STUDIES\02)ESA_and_ESA-CalAm\11) Logs_x-sections\GSSI_cross-sections_11-13\Fig_9_Combined_x-section_3-3′_May-14.ai

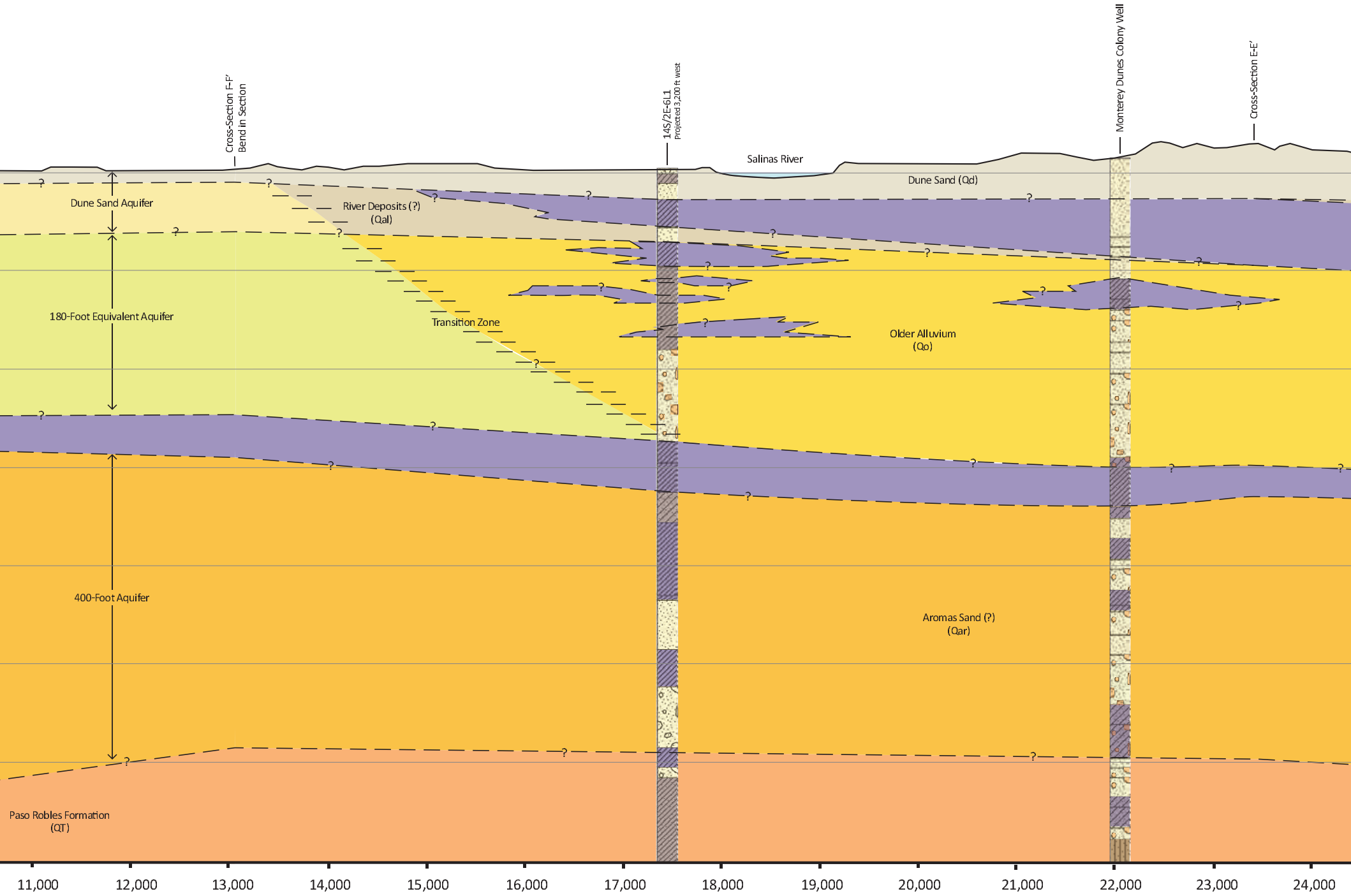
Cross-Section F-F′
Bend in Section
14S/2E-6L1
Projected 3,200 ft west
Monterey Dunes Colony Well
Cross-Section E-E′
Salinas River
Dune Sand (Qd)
Dune Sand Aquifer
River Deposits (?)
(Qal)
180-Foot Equivalent Aquifer
Transition Zone
Older Alluvium
(Qo)
400-Foot Aquifer
Aromas Sand (?)
(Qar)
Paso Robles Formation
(QT)
?
11,000
12,000
13,000
14,000
15,000
16,000
17,000
18,000
19,000
20,000
21,000
22,000
23,000
24,000

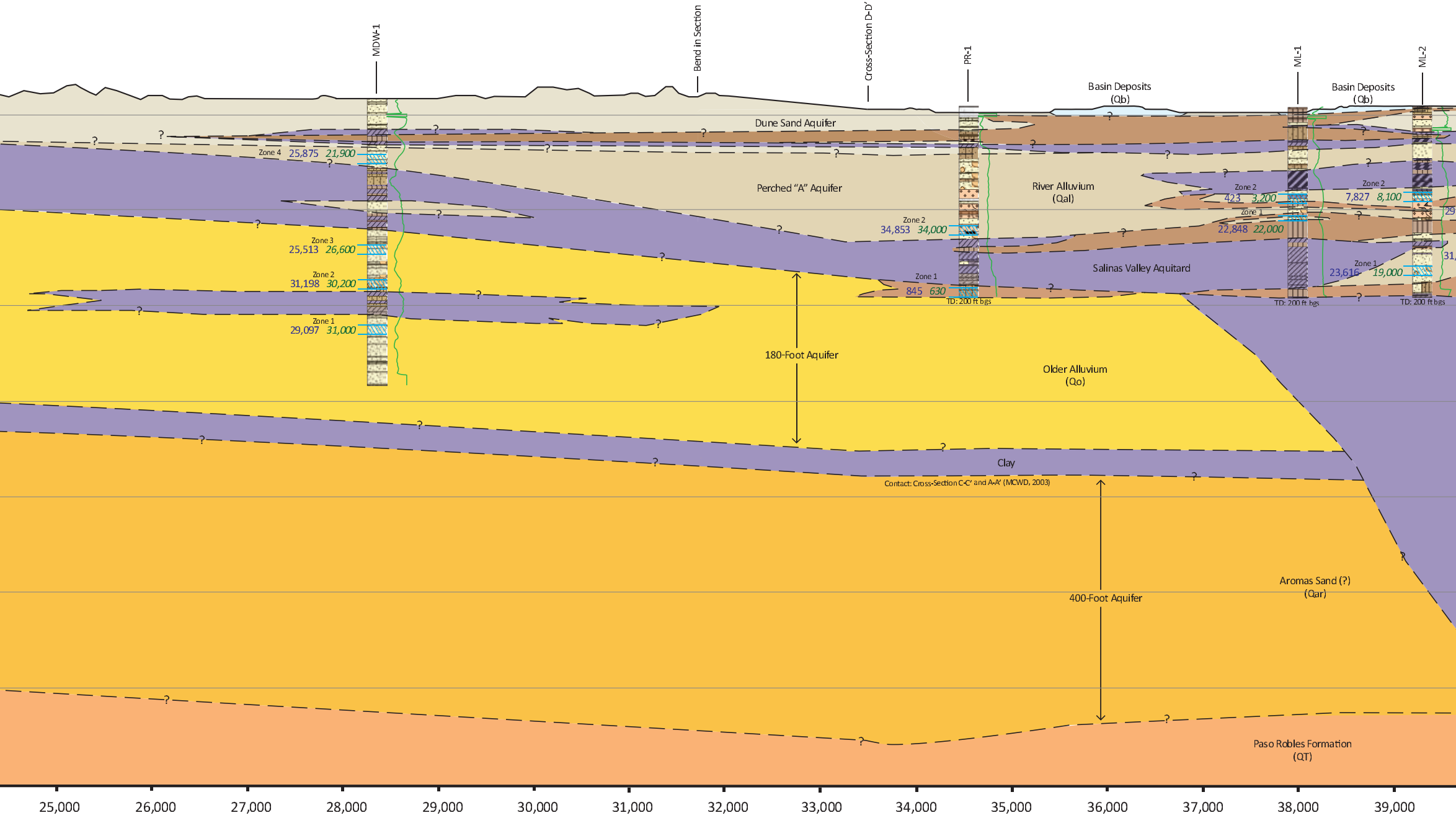
MDW-1
Bend in Section
Cross-Section D-D'
PR-1
ML-1
ML-2
Basin Deposits (Qb)
Basin Deposits (Qb)
Dune Sand Aquifer
Perched "A" Aquifer
River Alluvium (Qal)
Salinas Valley Aquitard
180-Foot Aquifer
Older Alluvium (Qo)
Clay
Contact: Cross-Section C-C' and A-A' (MCWD, 2003)
400-Foot Aquifer
Aromas Sand (?) (Qar)
Paso Robles Formation (QT)
Zone 4 25,875 21,900
Zone 3 25,513 26,600
Zone 2 31,198 30,200
Zone 1 29,097 31,000
Zone 2 34,853 34,000
Zone 1 845 630
TD: 200 ft bgs
Zone 2 423 3,200
Zone 1 22,848 22,000
TD: 200 ft bgs
Zone 2 7,827 8,100
Zone 1 23,616 19,000
TD: 200 ft bgs
29
31,
?
25,000
26,000
27,000
28,000
29,000
30,000
31,000
32,000
33,000
34,000
35,000
36,000
37,000
38,000
39,000

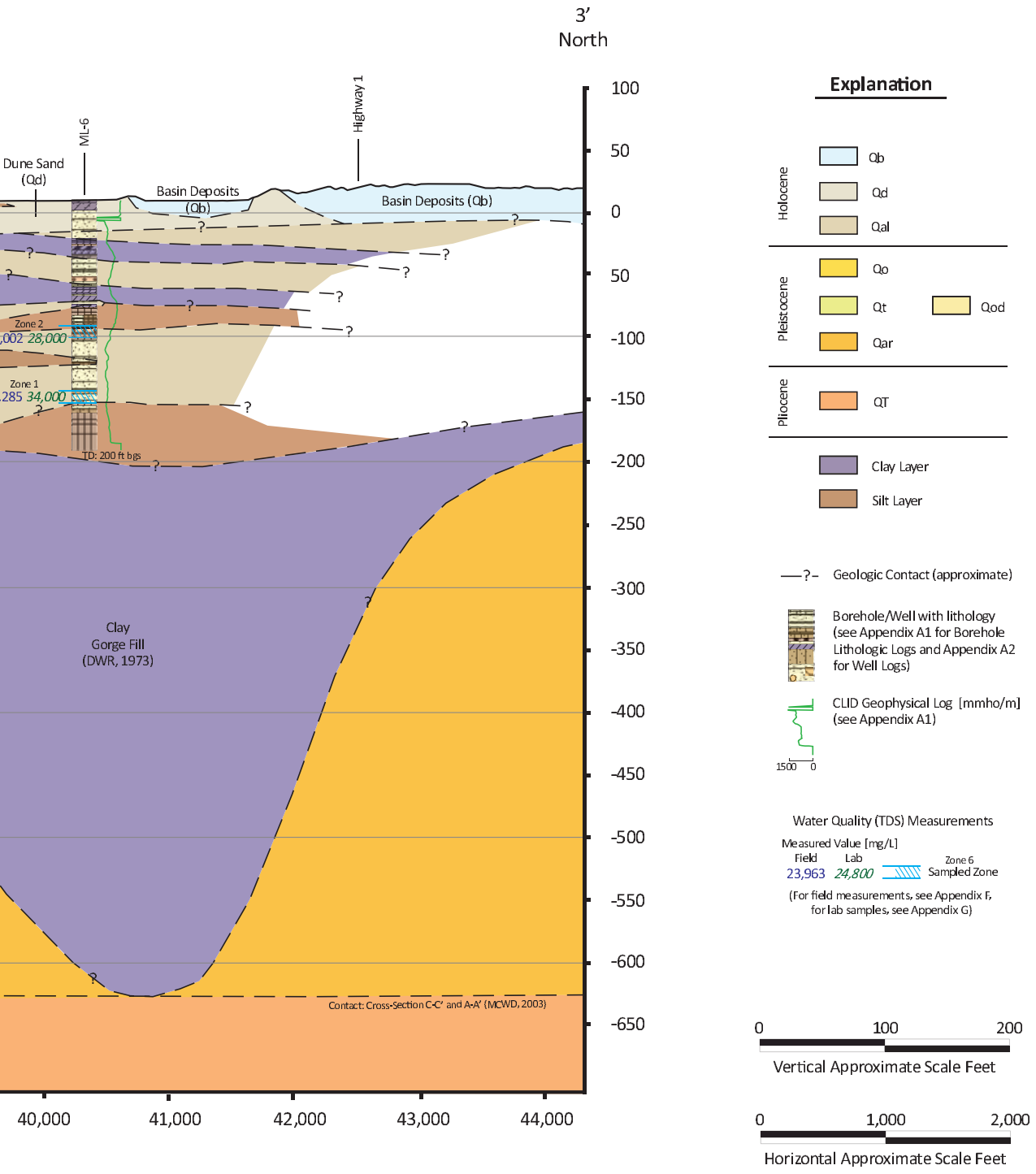
3'
North
Highway 1
ML-6
Dune Sand
(Qd)
Basin Deposits
(Qb)
Basin Deposits (Qb)
Zone 2
,002 28,000
Zone 1
285 34,000
TD: 200 ft bgs
Clay
Gorge Fill
(DWR, 1973)
Contact: Cross-Section C-C' and A-A' (MCWD, 2003)
?
100
50
0
50
-100
-150
-200
-250
-300
-350
-400
-450
-500
-550
-600
-650
40,000
41,000
42,000
43,000
44,000
Explanation
Holocene
Qb
Qd
Qal
Pleistocene
Qo
Qt
Qod
Qar
Pliocene
QT
Clay Layer
Silt Layer
—?— Geologic Contact (approximate)
Borehole/Well with lithology (see Appendix A1 for Borehole Lithologic Logs and Appendix A2 for Well Logs)
CLID Geophysical Log [mmho/m] (see Appendix A1)
1500 0
Water Quality (TDS) Measurements
Measured Value [mg/L]
Field Lab
23,963 24,800
Zone 6
Sampled Zone
(For field measurements, see Appendix F, for lab samples, see Appendix G)
0 100 200
Vertical Approximate Scale Feet
0 1,000 2,000
Horizontal Approximate Scale Feet

GEOSCIENCE

GEOSCIENCE Support Services, Incorporated
P.O. Box 220, Claremont, CA 91711
Tel: (909) 451-6650 Fax: (909) 451-6638
www.gssiwater.com

CALIFORNIA AMERICAN WATER & RBF CONSULTING

GEOLOGIC CROSS-SECTION 3-3'

Drawn: LC

Checked:

Approved:

Date: 8-Jul-14

Figure
9

Figure 10

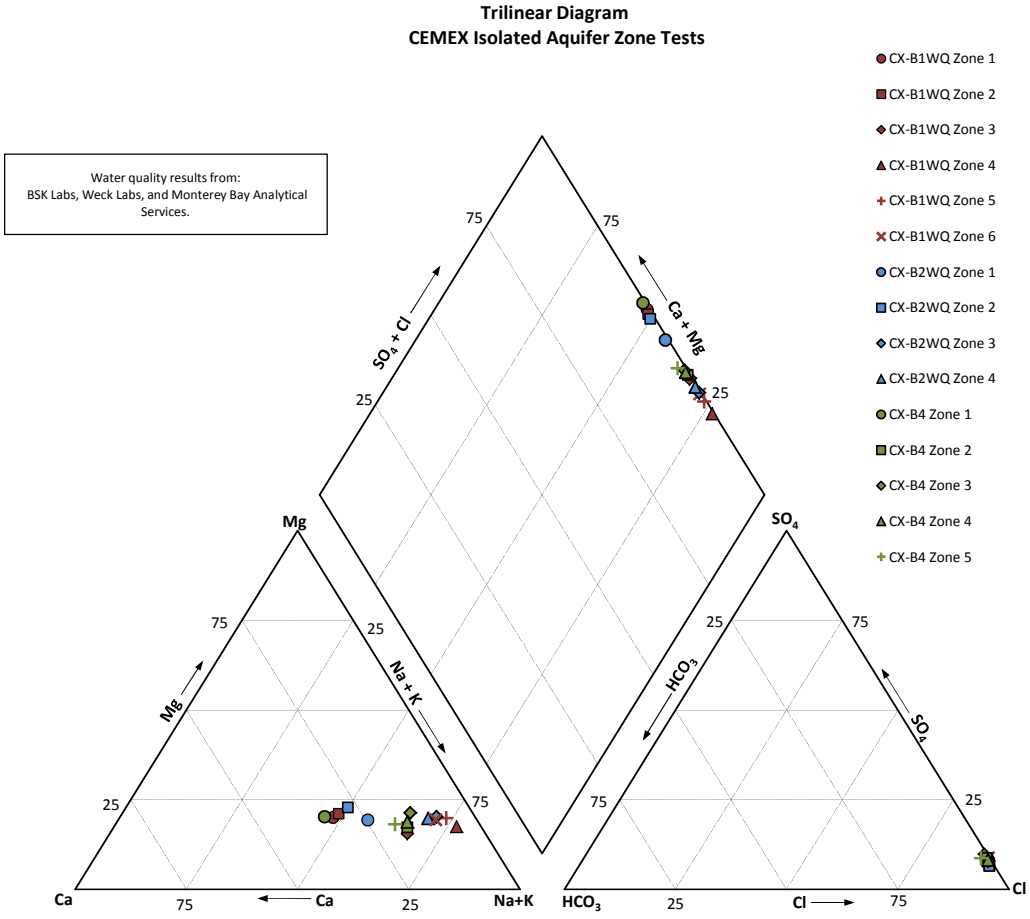
Trilinear Diagram
CEMEX Isolated Aquifer Zone Tests
Water quality results from:
BSK Labs, Weck Labs, and Monterey Bay Analytical Services.
CX-B1WQ Zone 1
CX-B1WQ Zone 2
CX-B1WQ Zone 3
CX-B1WQ Zone 4
CX-B1WQ Zone 5
CX-B1WQ Zone 6
CX-B2WQ Zone 1
CX-B2WQ Zone 2
CX-B2WQ Zone 3
CX-B2WQ Zone 4
CX-B4 Zone 1
CX-B4 Zone 2
CX-B4 Zone 3
CX-B4 Zone 4
CX-B4 Zone 5
SO4 + Cl
Ca + Mg
Mg
Na + K
SO4
HCO3
Ca
Na+K
HCO3
Cl
75
25

Figure 11

Trilinear Diagram
Moss Landing Isolated Aquifer Zone Tests

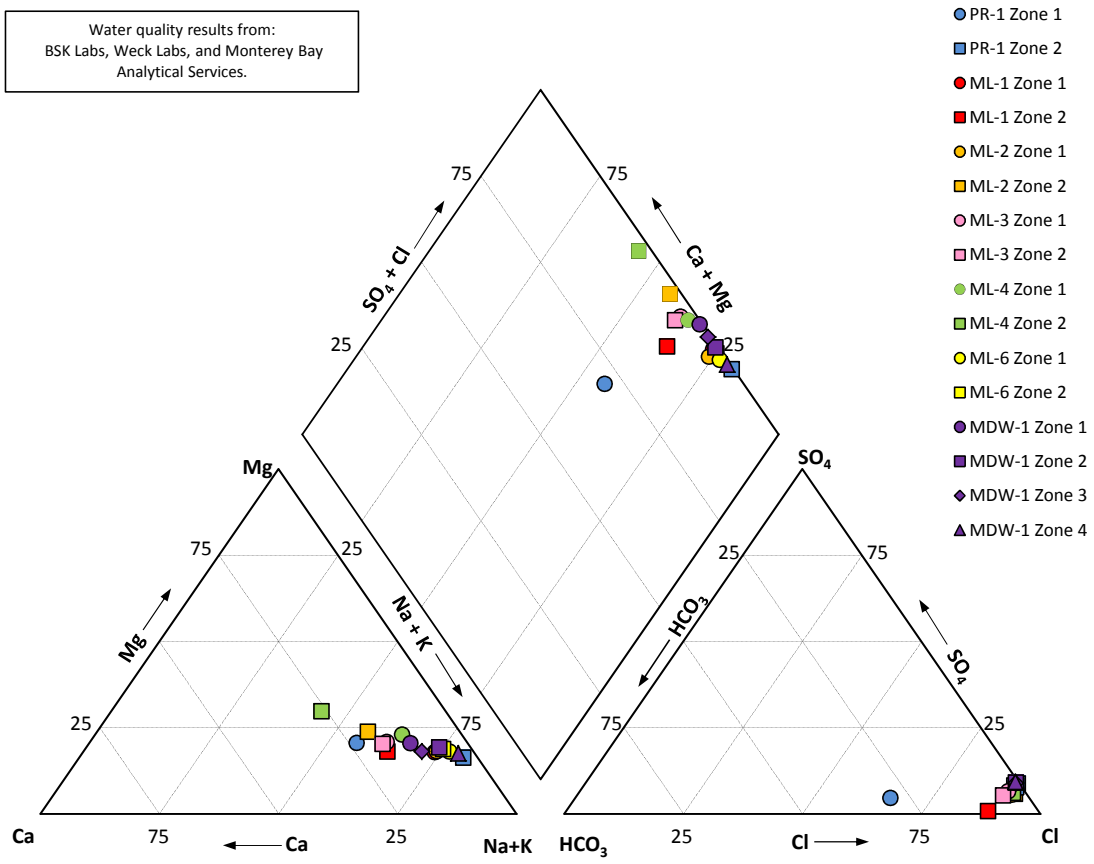

CEMEX Area Water Quality Plot
TDS versus Chloride

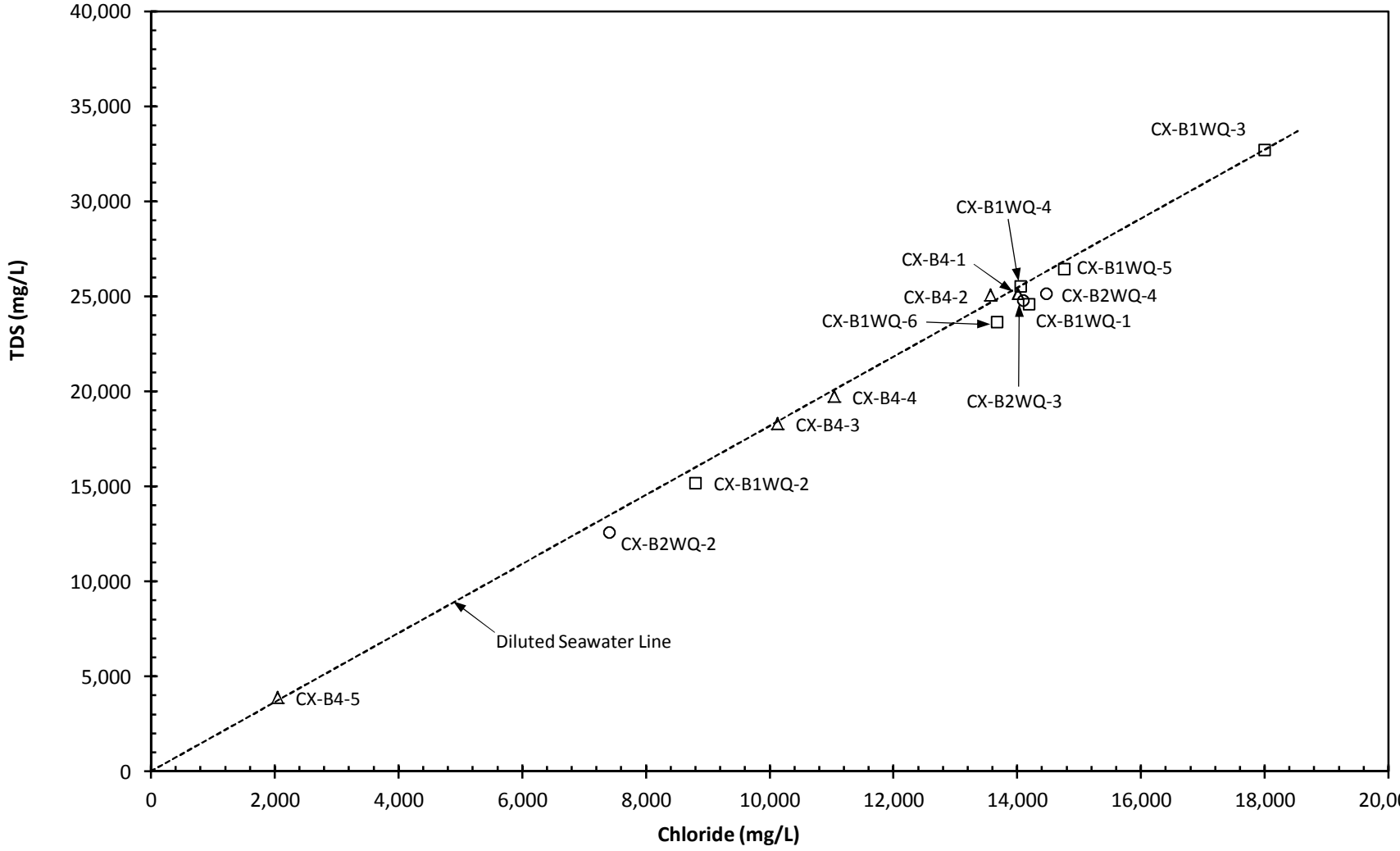

Figure 12

CEMEX Area Water Quality Plot
Sodium versus Chloride

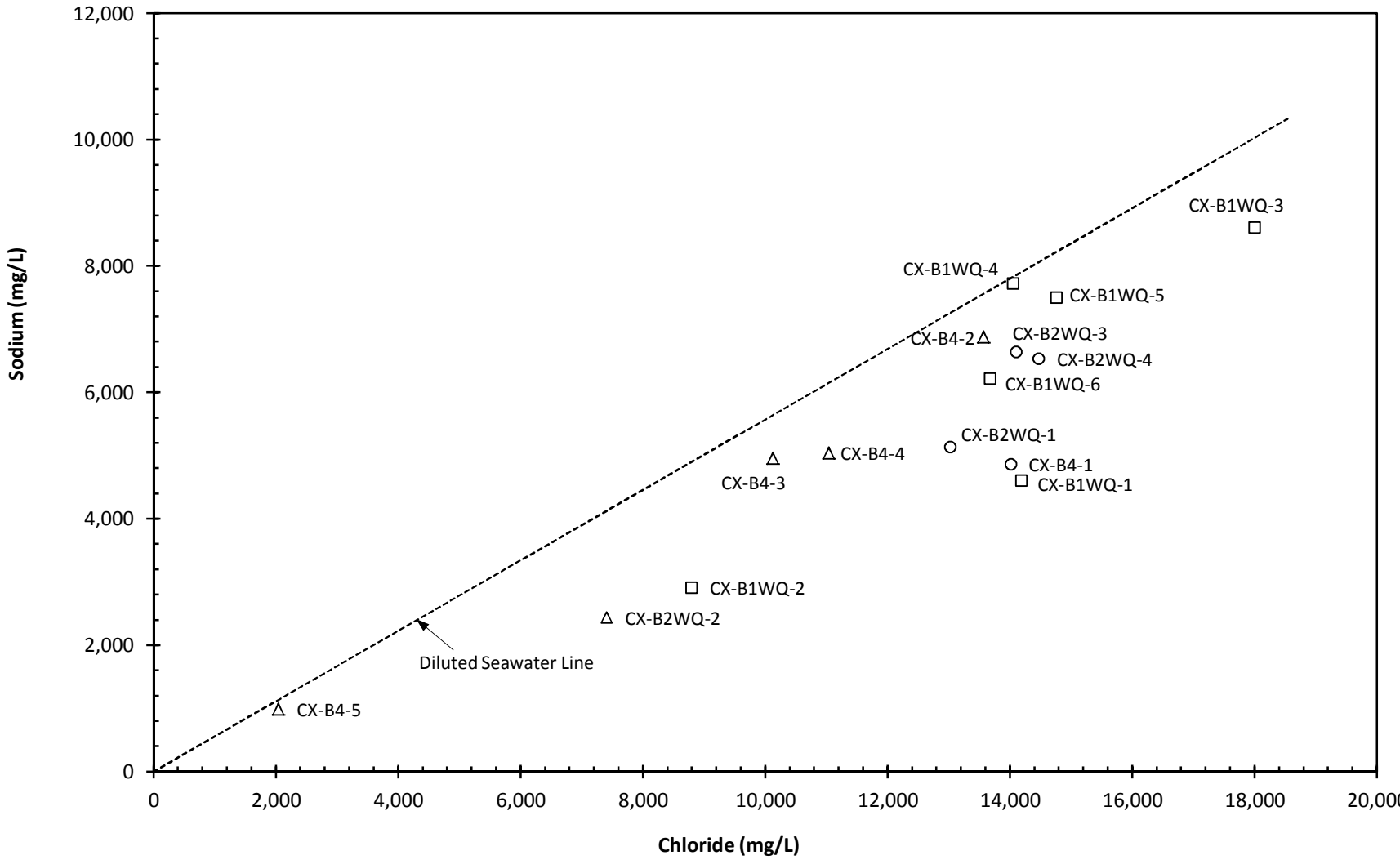

Figure 13

CEMEX Area Water Quality Plot
Calcium versus Chloride

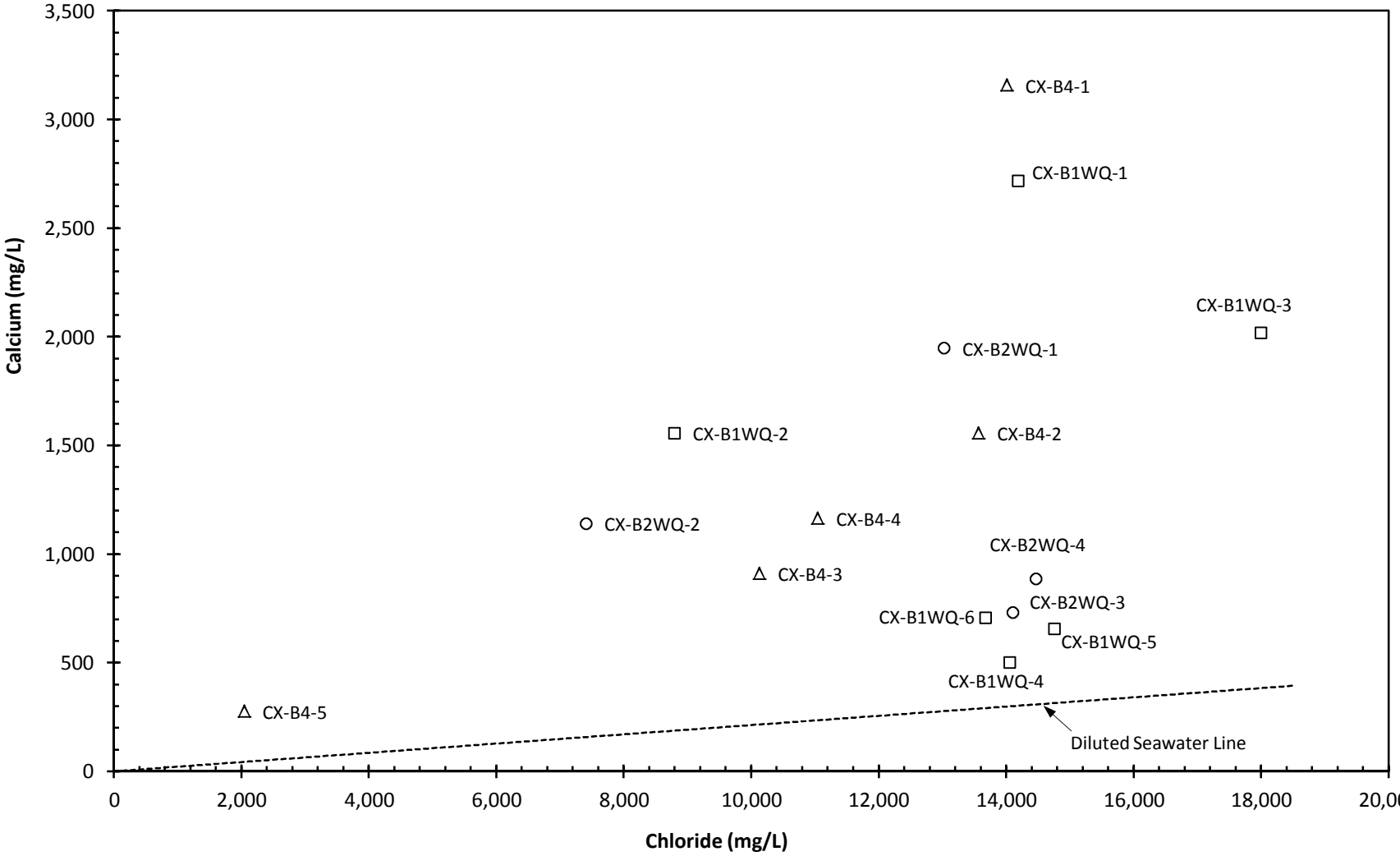

Figure 14

CEMEX Area Water Quality Plot
ΔSodium versus ΔCalcium

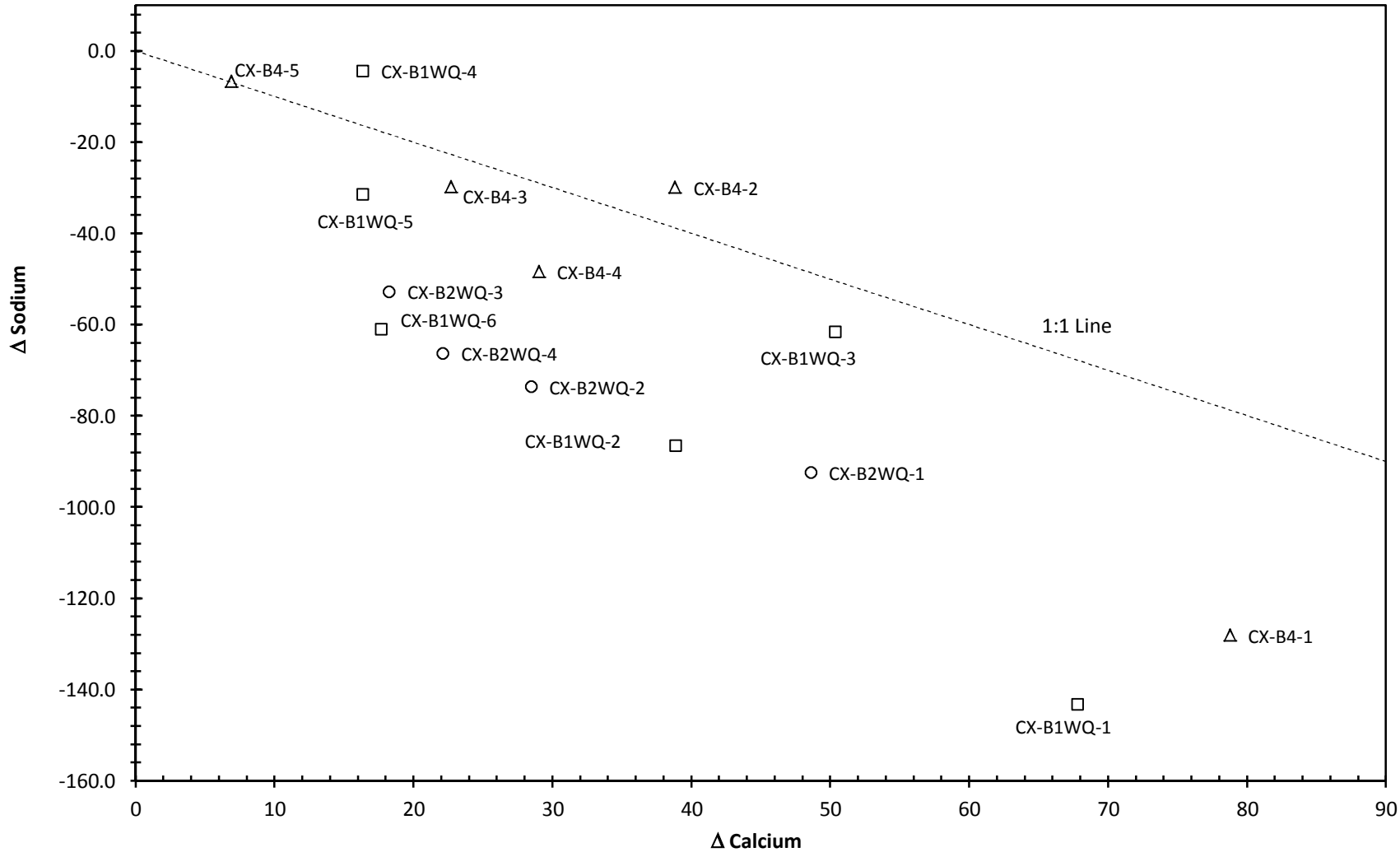

Figure 15

CEMEX Area Water Quality Plot
Total Boron versus Chloride

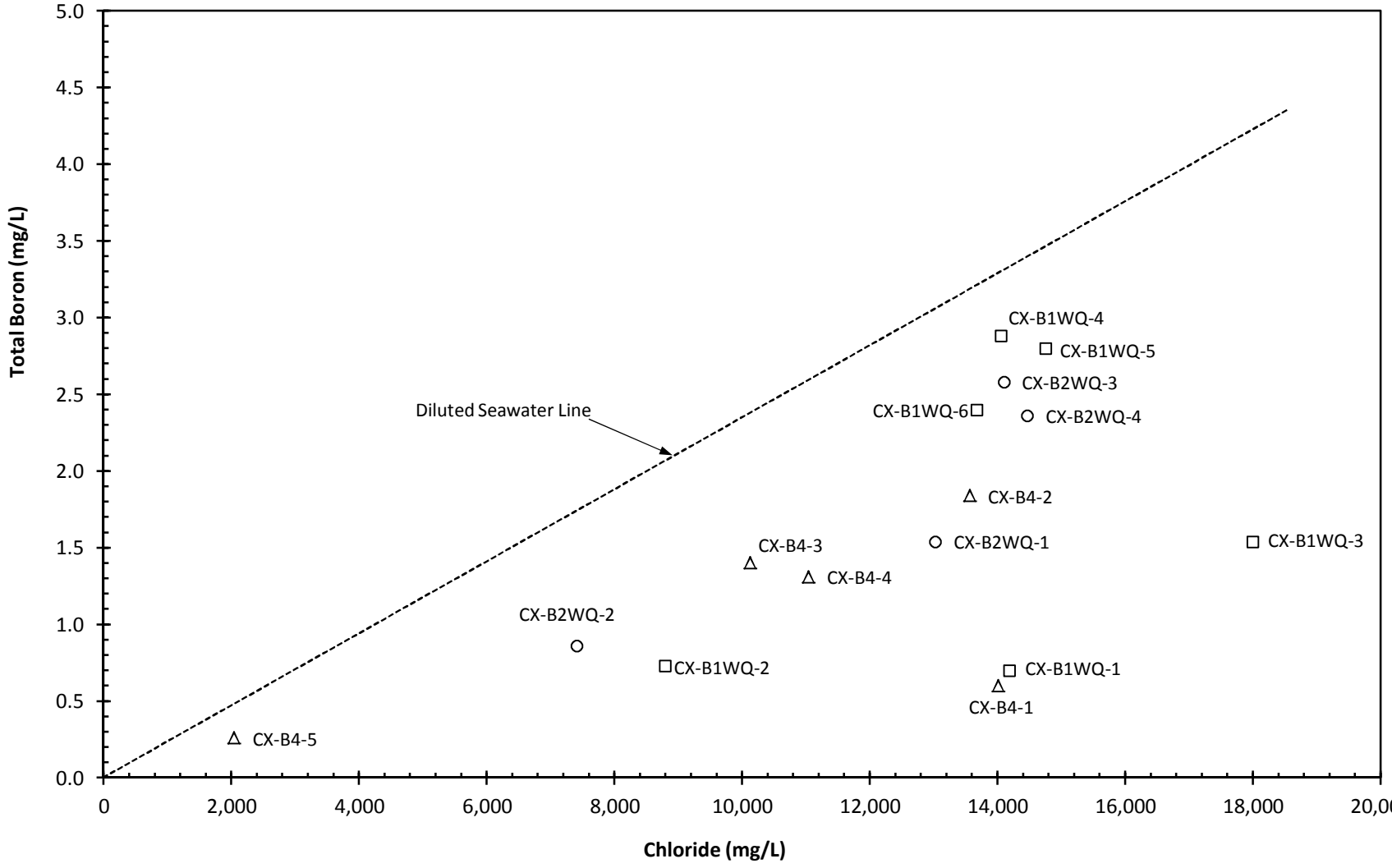

Figure 16

CEMEX Area Water Quality Plot
Strontium versus Chloride

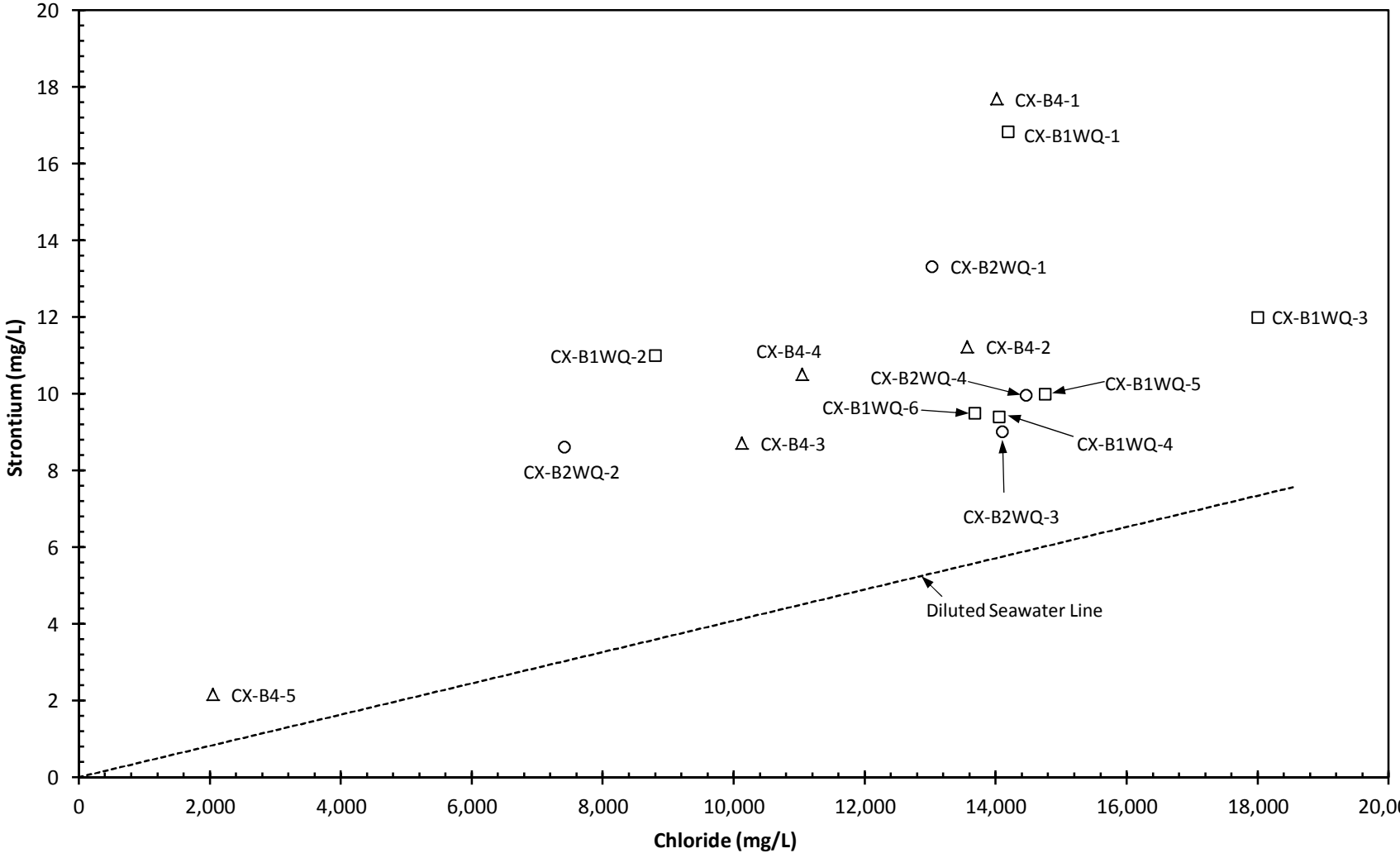

Figure 17

CEMEX Area Water Quality Plot
Sulfate versus Chloride

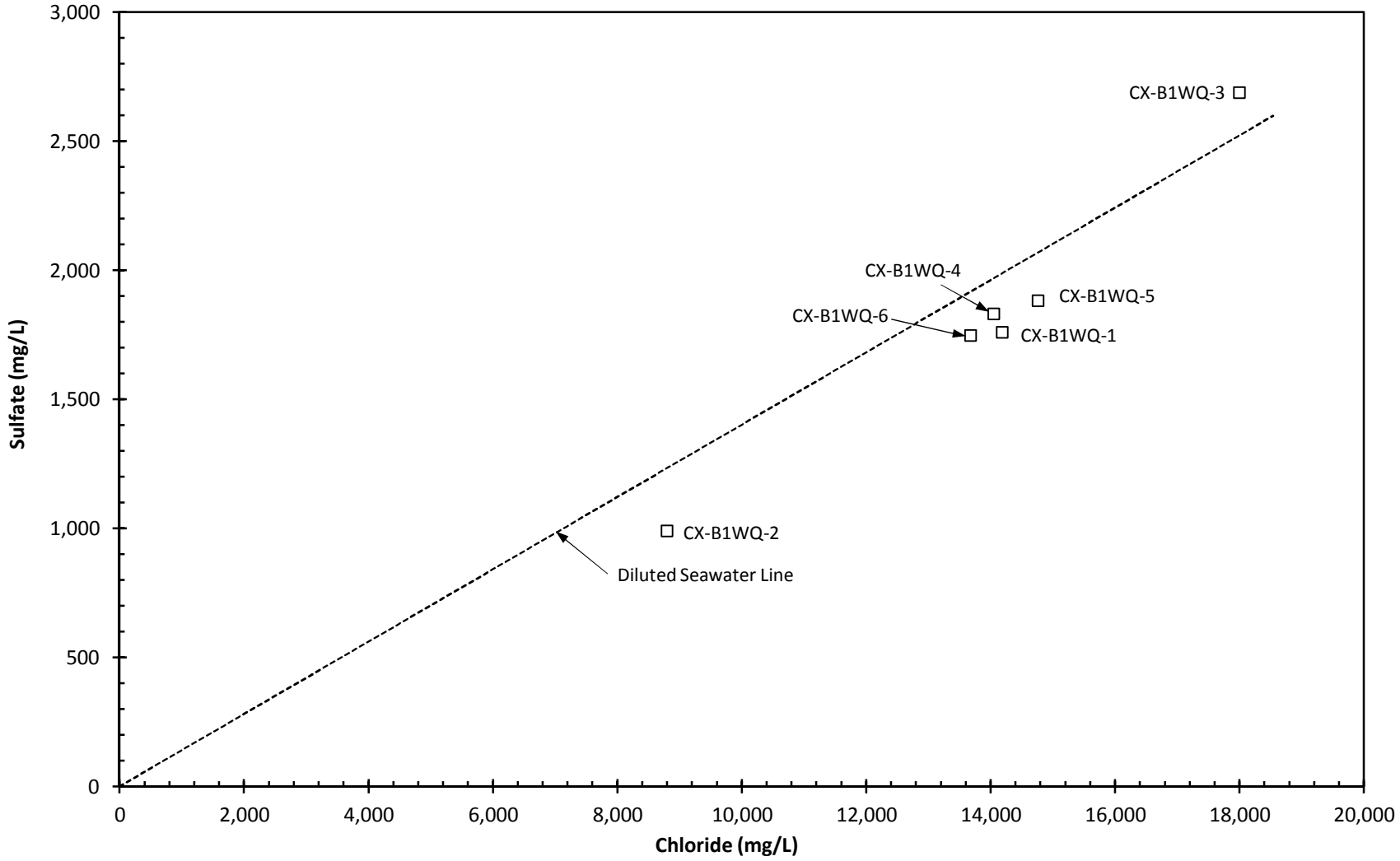

Figure 18

Moss Landing Area Water Quality Plot
TDS versus Chloride

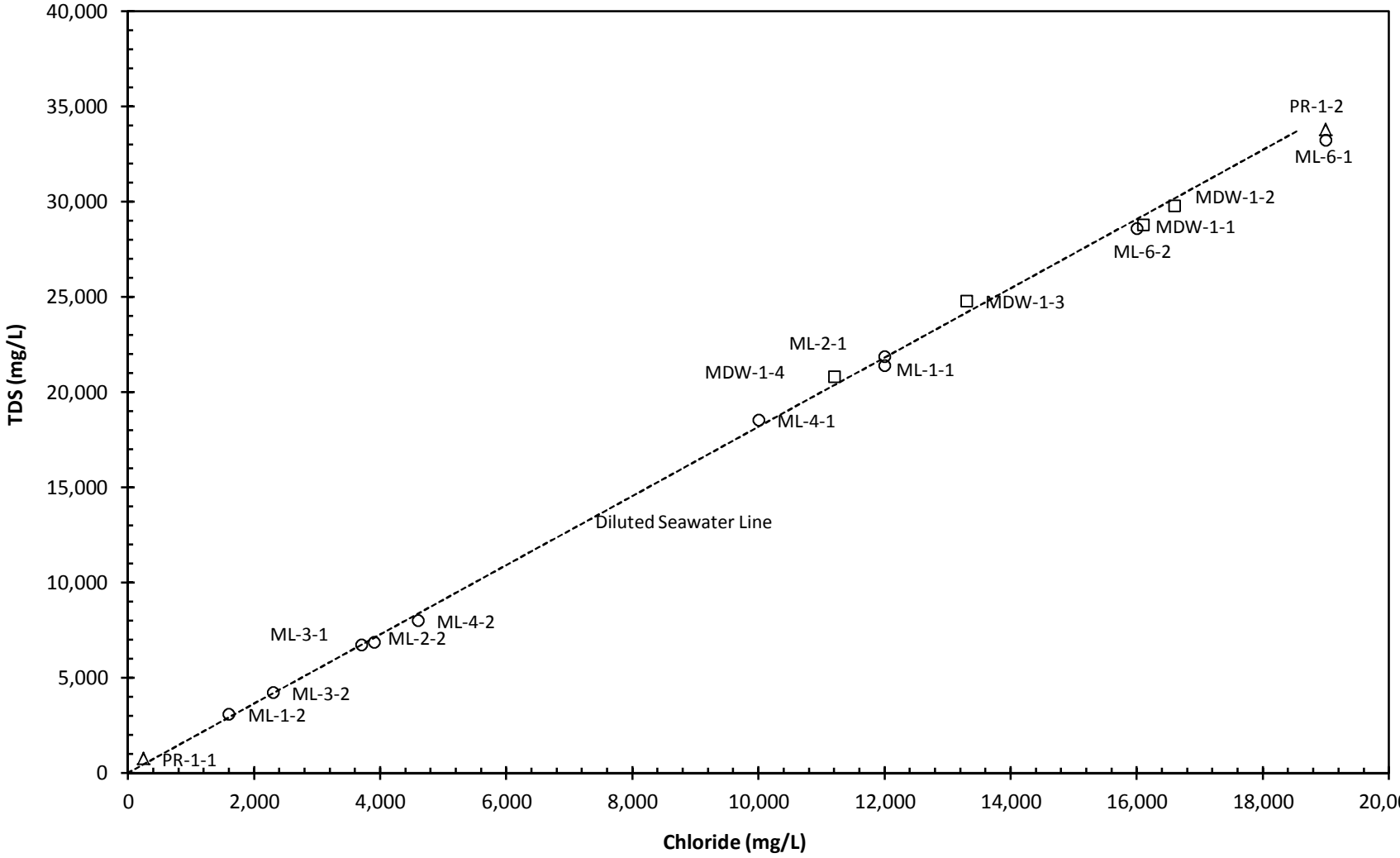

Figure 19

Moss Landing Area Water Quality Plot
Sodium versus Chloride

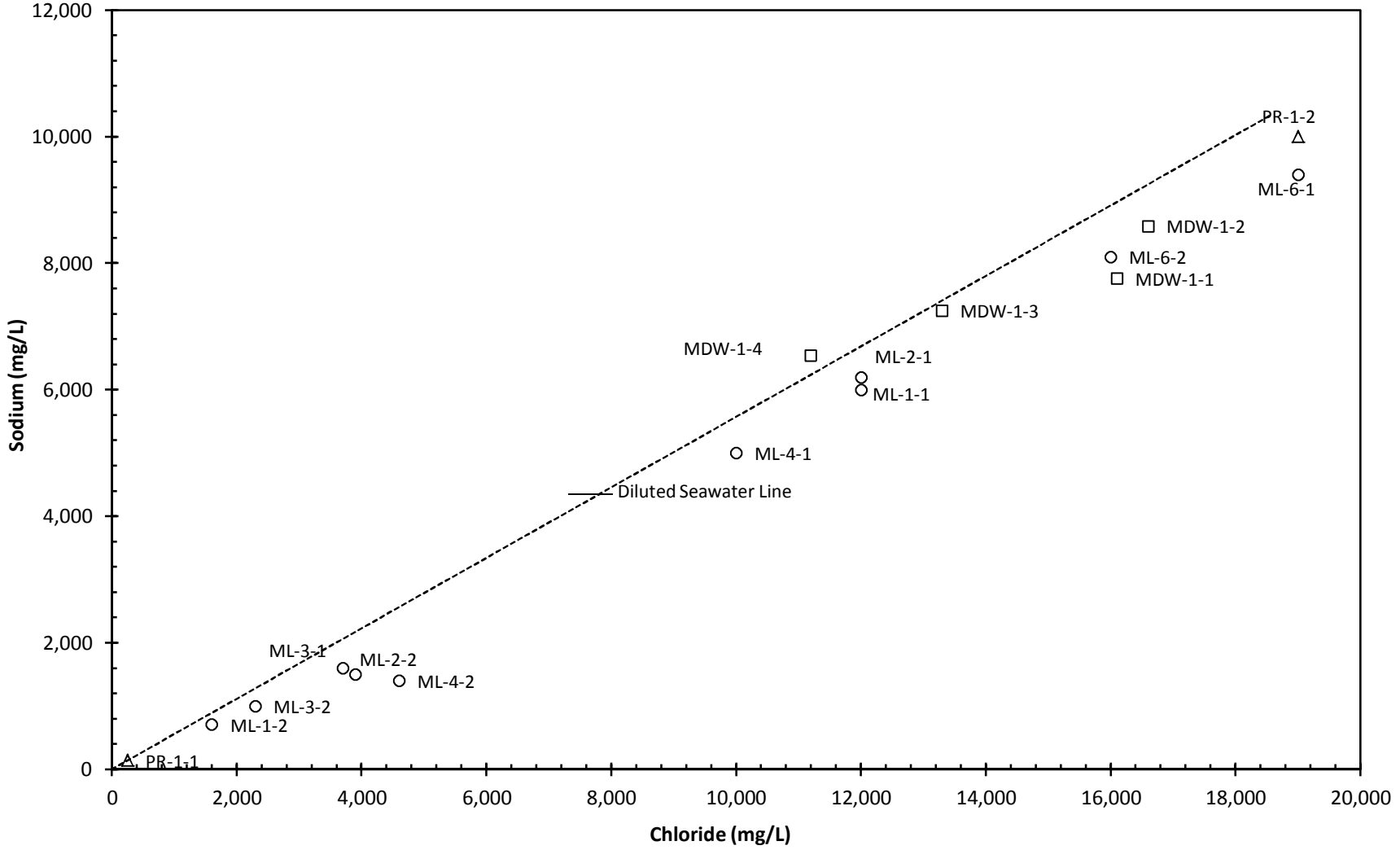

Figure 20

Moss Landing Area Water Quality Plot
Calcium versus Chloride

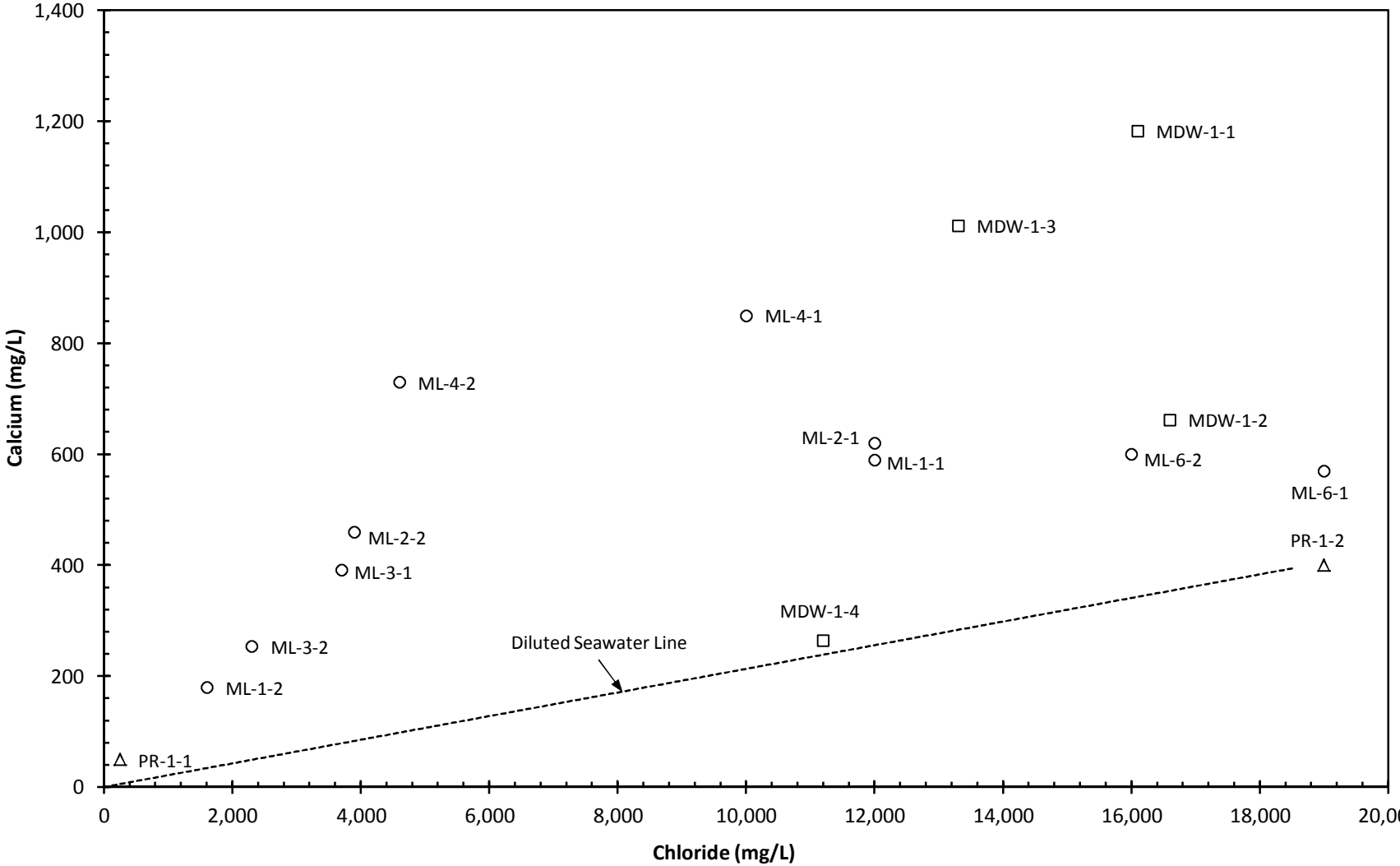

Figure 21

Moss Landing Area Water Quality Plot
ΔSodium versus ΔCalcium

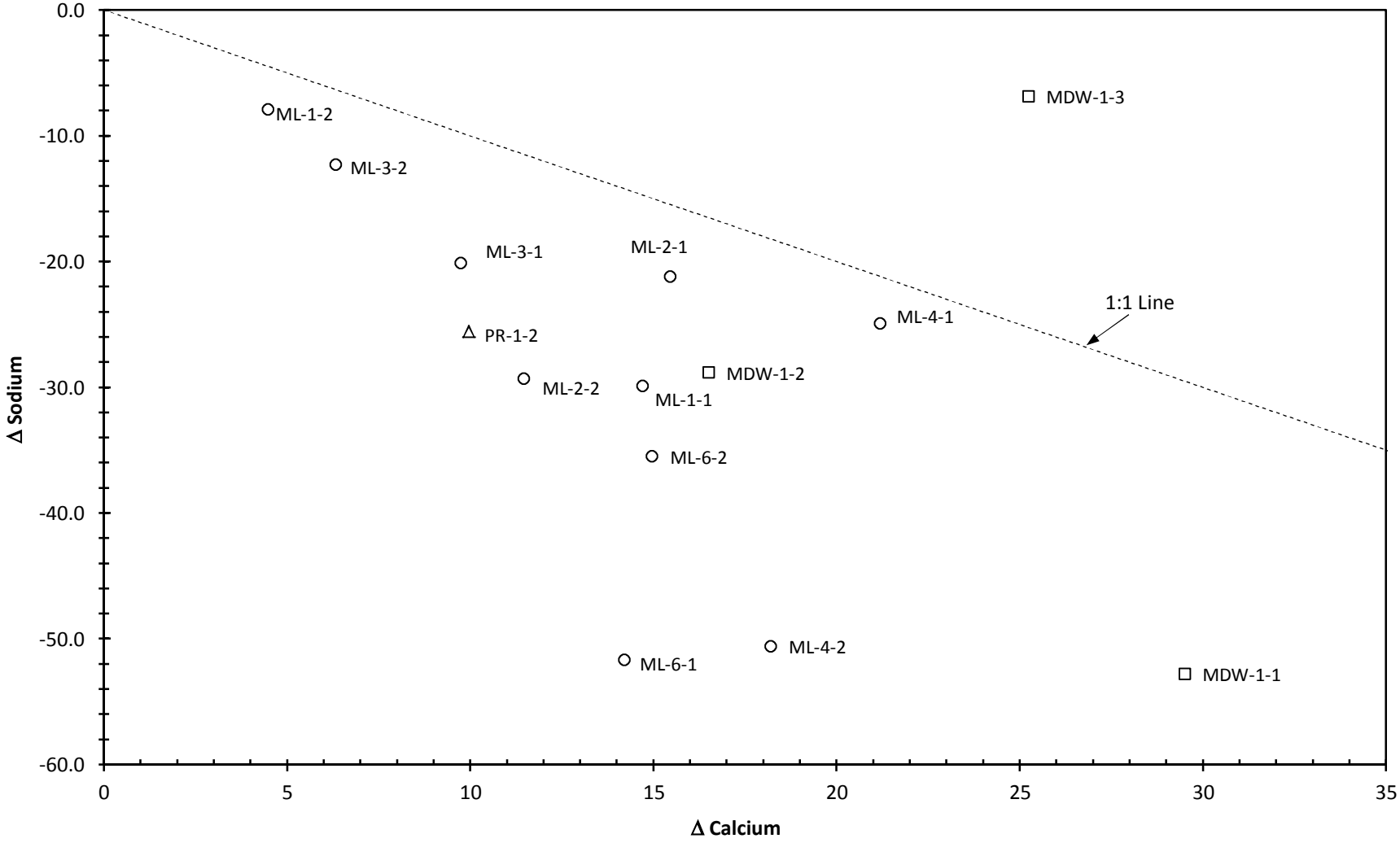

Figure 22

Moss Landing Area Water Quality Plot
Total Boron versus Chloride

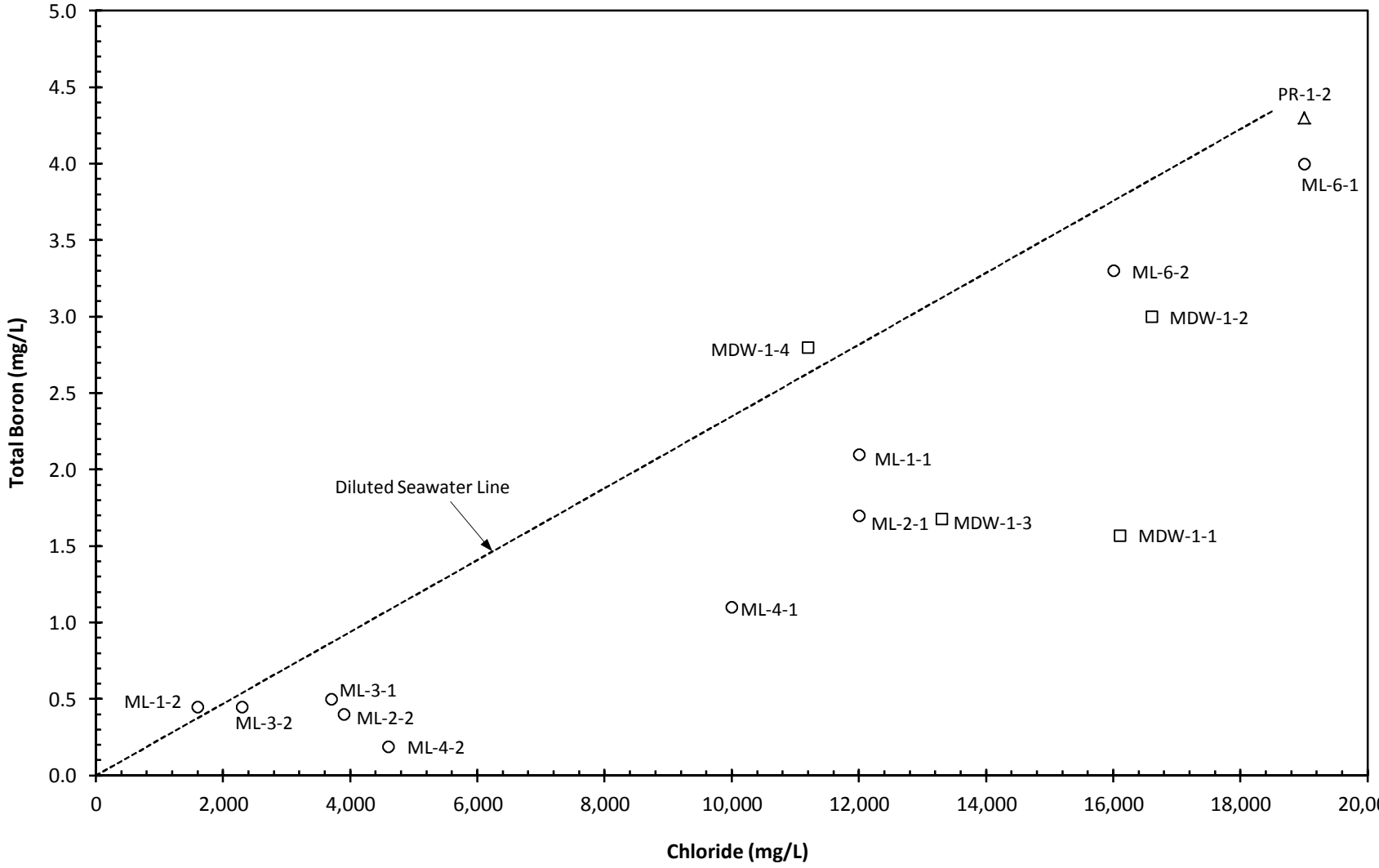

Figure 23

Moss Landing Area Water Quality Plot
Strontium versus Chloride

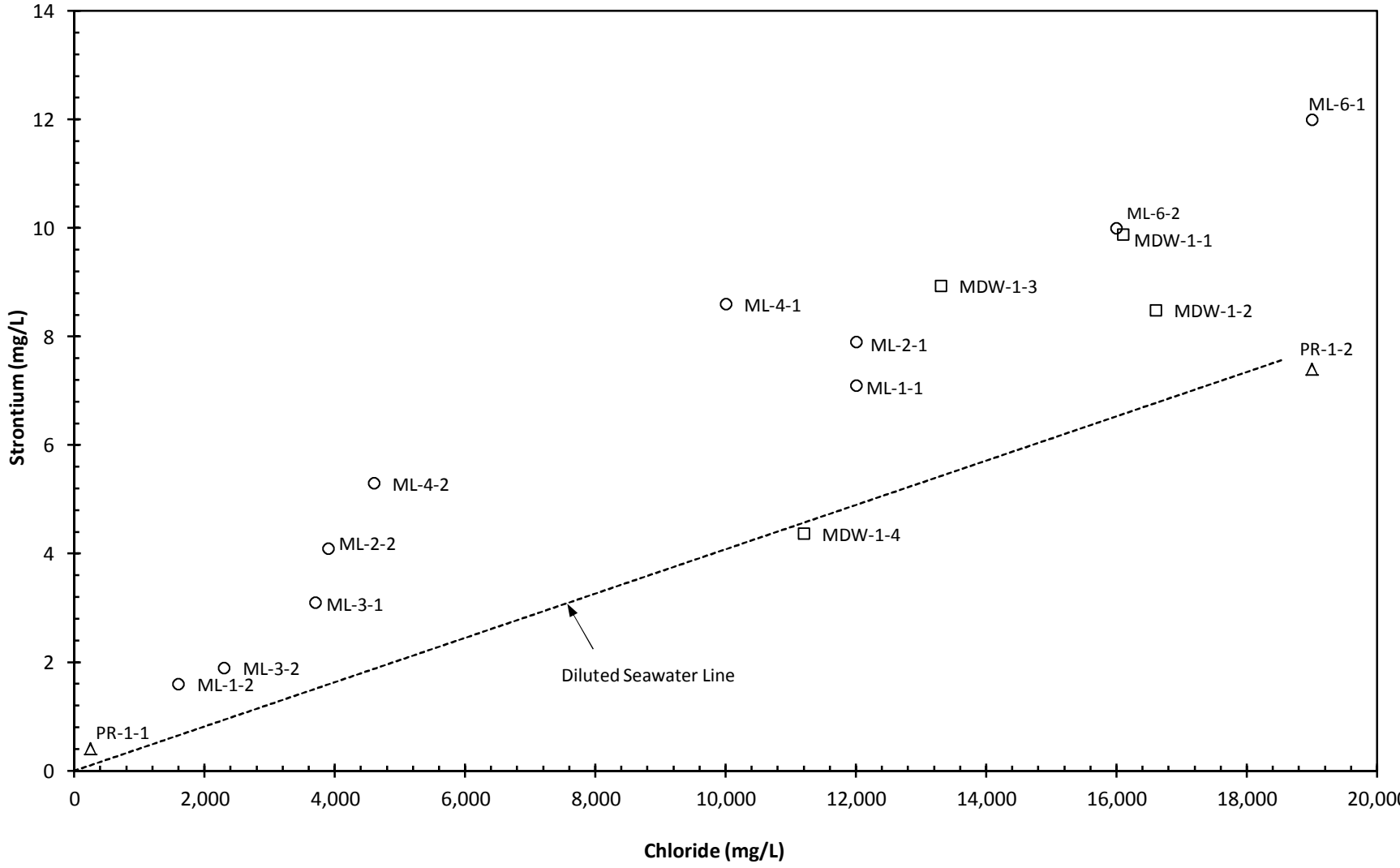

Figure 24

Moss Landing Area Water Quality Plot
Sulfate versus Chloride

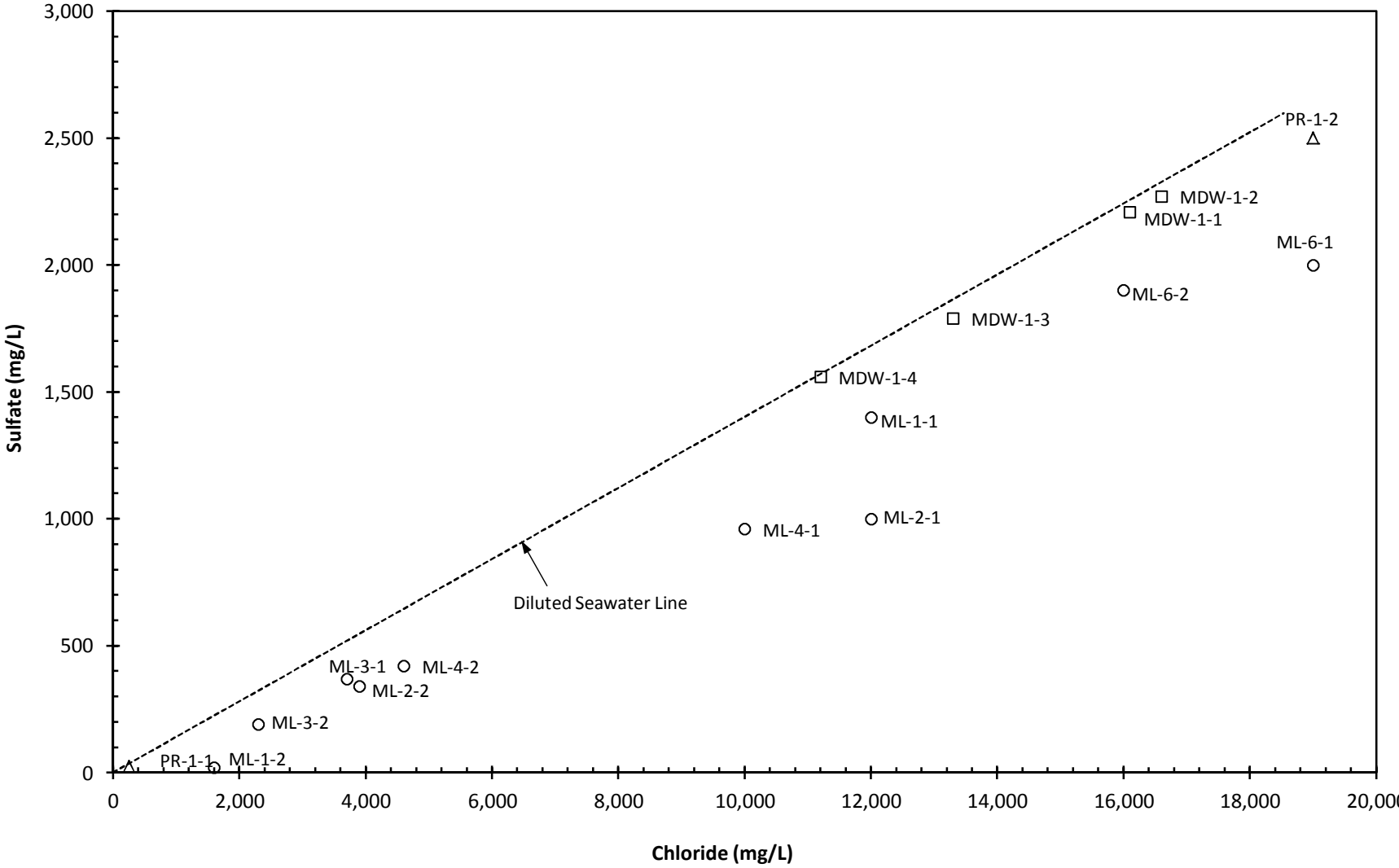

Figure 25

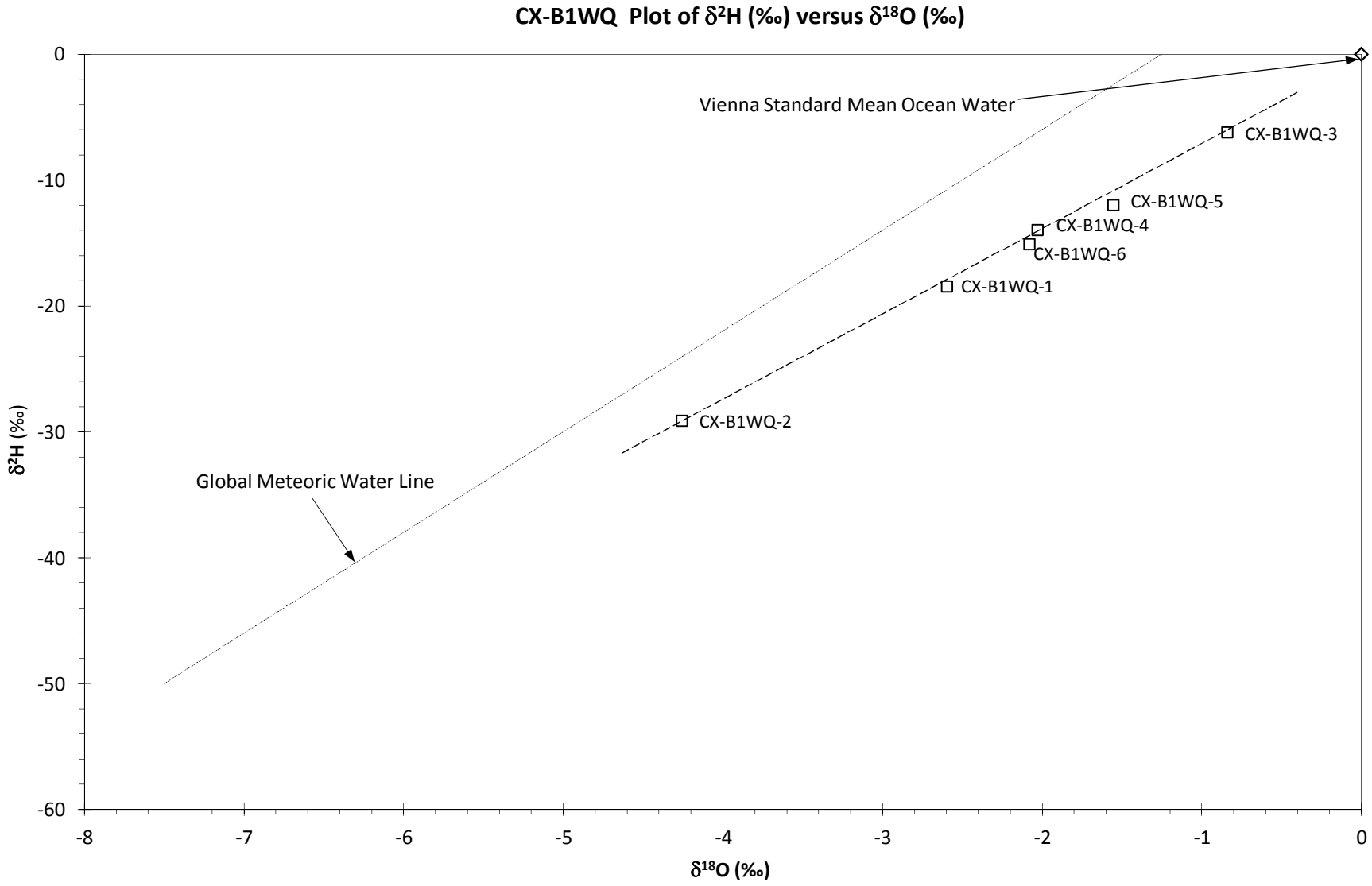
CX-B1WQ Plot of δ²H (‰) versus δ¹⁸O (‰)
Vienna Standard Mean Ocean Water
Global Meteoric Water Line
CX-B1WQ-1
CX-B1WQ-2
CX-B1WQ-3
CX-B1WQ-4
CX-B1WQ-5
CX-B1WQ-6
δ²H (‰)
δ¹⁸O (‰)
0
-10
-20
-30
-40
-50
-60
-8
-7
-6
-5
-4
-3
-2
-1
0

Figure 26

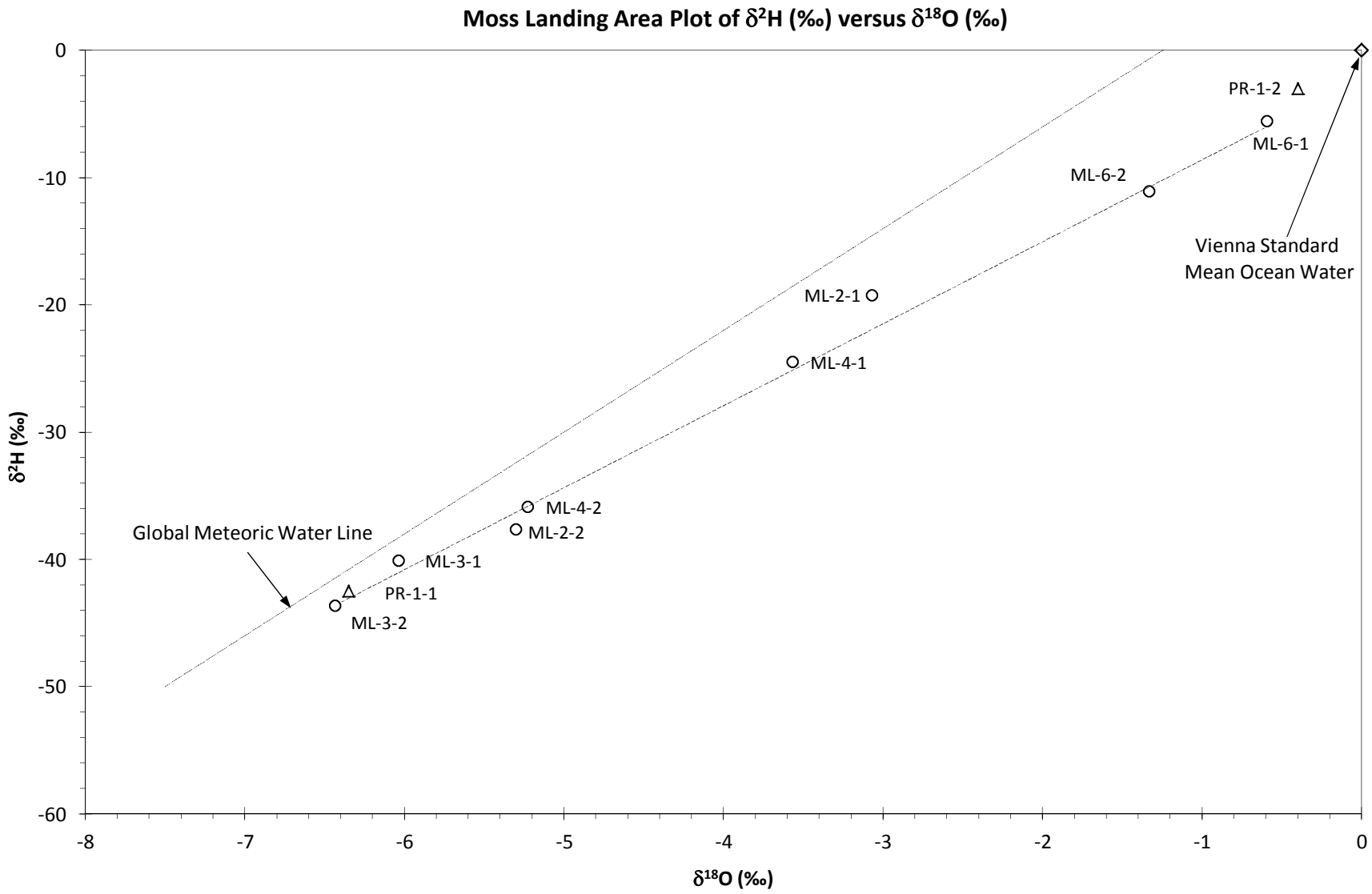
Moss Landing Area Plot of δ²H (‰) versus δ¹⁸O (‰)
0
-10
-20
-30
-40
-50
-60
δ²H (‰)
-8
-7
-6
-5
-4
-3
-2
-1
0
δ¹⁸O (‰)
PR-1-2
ML-6-1
ML-6-2
Vienna Standard
Mean Ocean Water
ML-2-1
ML-4-1
ML-4-2
ML-2-2
Global Meteoric Water Line
ML-3-1
PR-1-1
ML-3-2

Figure 27

GROUND WATER MODEL BOUNDARIES

North Marina Ground Water Model Boundary

Proposed CEMEX Model Boundary (see inset below at right)

SVIGSM Model Boundary

Monterey Bay

Pacific Ocean

San Benito Co

Monterey Co

Correlation of Geologic and Hydrostratigraphic with SVIGSM and NMGWM Layers

180/400-Foot Aquifer Subbasin			CEMEX Area					
Surface Geologic Units	Surface Geologic Units Map Symbol	Hydro-stratigraphic Units	Surface Geologic Units	Surface Geologic Units Map Symbol	Hydro-stratigraphic Units	SVIGSM Layer[1]	NMGWM Layer	CEMEX Model Layer
Ocean Floor	Qf?	Ocean Floor	Ocean Floor	Qf?	Ocean Floor	Constant Head	1	1
Alluvium	Qal[2]	Perched "A" Aquifer	Dune Sand	Qd	Dune Sand Aquifer	1a	2	2
			Older Dune Sand	Qod				3
								4
Older Alluvium	Qo	Salinas Valley	Older Terrace/ Marine Terrace	Qt (Qmt?)	180-Foot Aquifer Equivalent	1a	3	5
Older Alluvium/ Marine Terrace	Qo/Qmt	180-Foot Aquifer				1	4	6
								7
Older Alluvium/ Older	Qo/Qfa							8
Older Alluvial Fan – Placentia	Qfp	180/400-Foot Aquitard	Aromas Sand (undifferentiated)	Qar	180/400-Foot Aquitard	2a	5	9
Aromas Sand (undifferentiated)	Qar	400-Foot Aquifer			400-Foot Aquifer	2	6	10
Aromas Sand – Eolian Lithofacies	Qae							
Paso Robles Formation	QT	400/900-Foot Aquitard	Paso Robles Formation**	QT	400/900-Foot Aquitard	3a	7	11
		900-Foot Aquifer			900-Foot Aquifer	3	8	12

[1] SVIGSM considers "a" layers to be aquitards (vertical hydraulic conductivity and thickness are input)
[2] Subsurface Holocene geologic unit not mapped at surface

MODEL DETAILS

	SVIGSM	NMGWM	CEMEX Model
Computer Code	IGSM	MODFLOW & MT3DMS	SEAWAT
Cell Size	Approx. 0.4 sq. miles	200 ft X 200 ft	20 ft X 20 ft
Number of Model Layers	3	8	12

DETAILED VIEW OF PROPOSED CEMEX MODEL GRID (20ft X 20ft Model Cell)

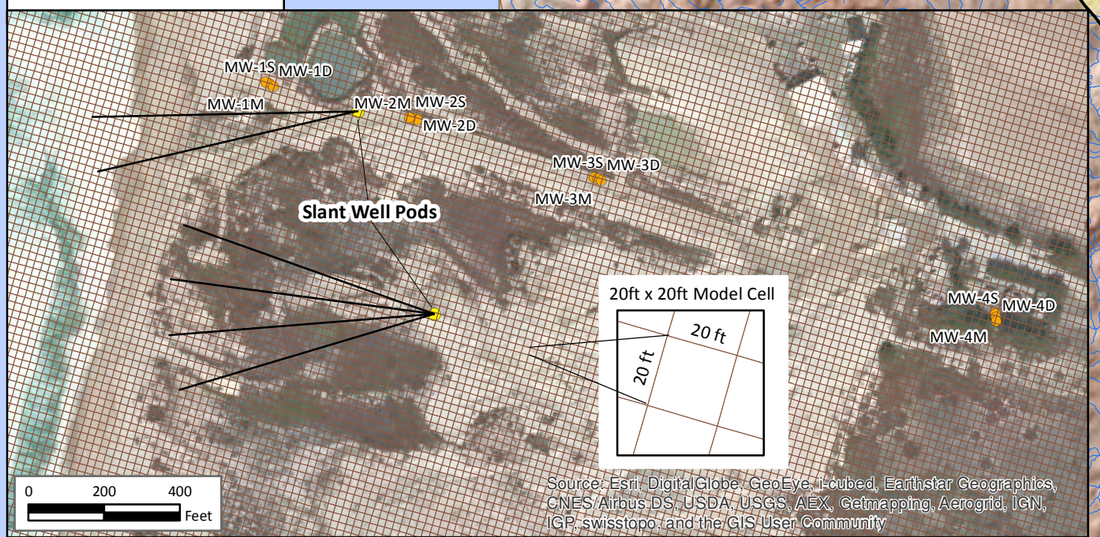

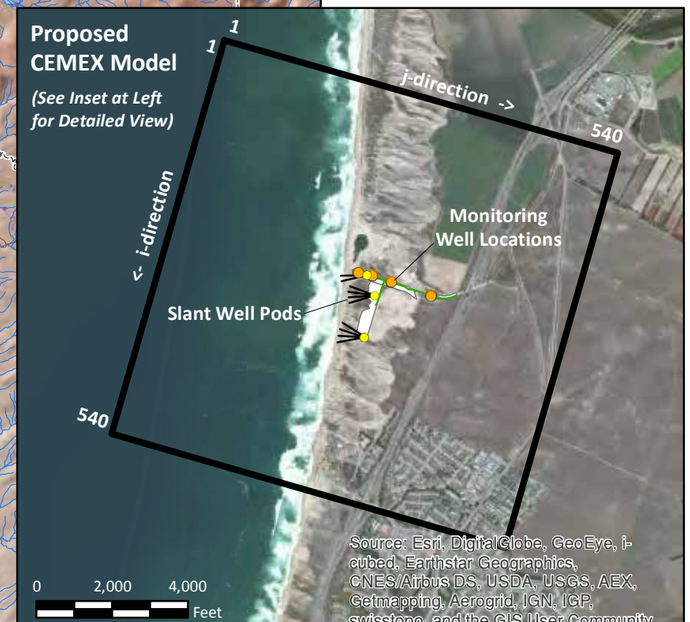

8-Jul-14

Prepared by: DWB. Map Projection: State Plane 1983, Zone IV.

© 2014, GEOSCIENCE Support Services, Inc. All rights reserved.

NORTH

0 5 10 20 Miles

GEOSCIENCE Support Services, Inc.
P.O. Box 220, Claremont, CA 91711
Tel: (909) 451-6650 Fax: (909) 451-6638
www.gssiwater.com

Figure 28

GIS_proj/mcwsp_cal_am/rbf_boring_tech_memo_7-14/4_Fig_28_model_bndys_7-14.mxd

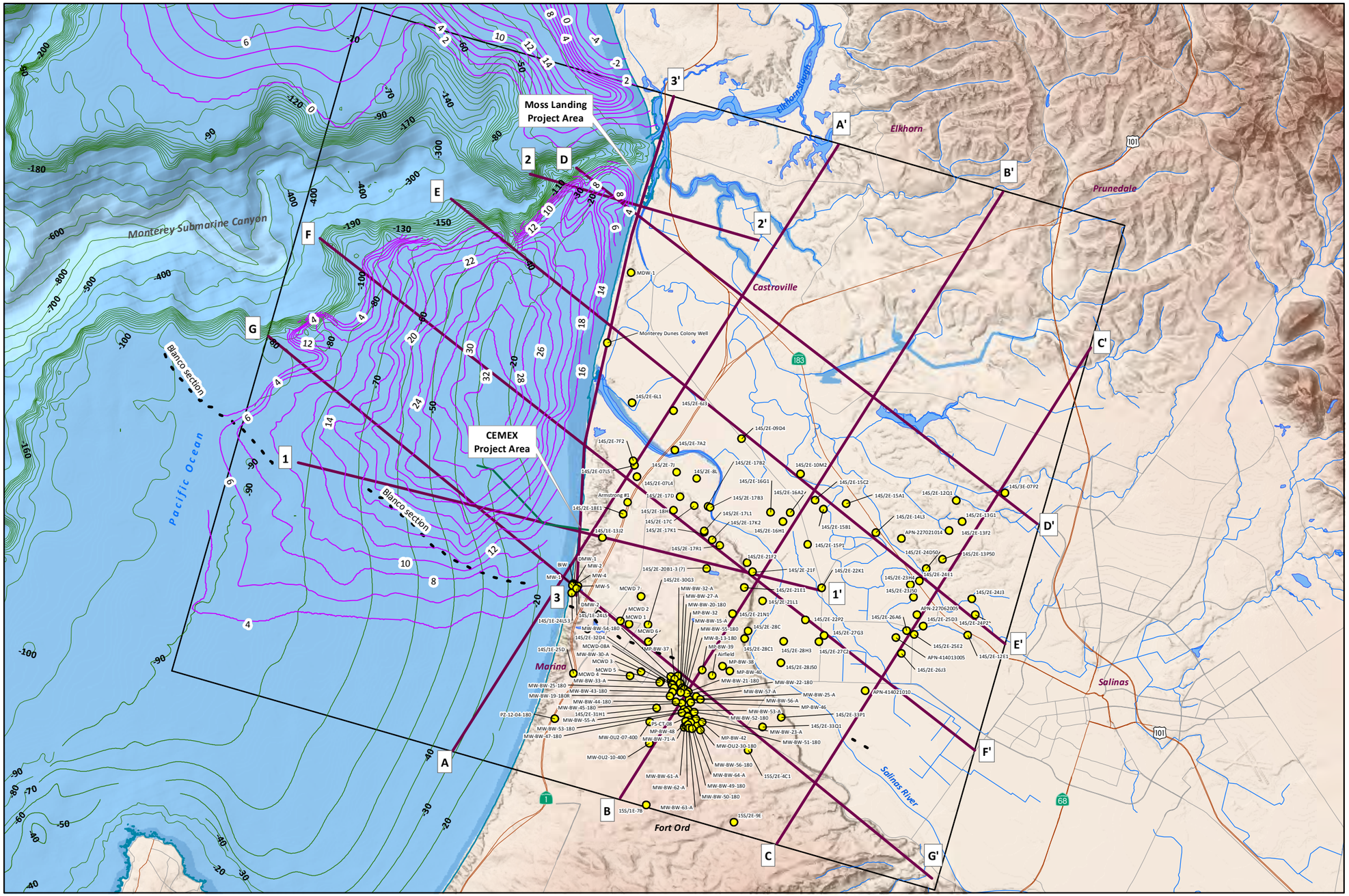

WELL AND CROSS-SECTION LOCATIONS

EXPLANATION

- Well Location
- 1 — 1' Cross-Section Location (See Figures 7-9 and 30-36)
- Holocene Sediment Thickness (meters) Source (USGS OFR 01-179)
- Fault - Blanco Section of the Reliz Fault (Source: USGS SIM 3059)
- Pipeline Outfall
- North Marina Groundwater Model Boundary
- -10 Elevation of Sea Floor, meters (Wong, F.L. and Eittreim, S.L., 2001)
- Mean High Tide (DOC et al., 2011)

8-Jul-14

Prepared by: DWB. Map Projection: State Plane 1983, Zone IV.

© 2014, GEOSCIENCE Support Services, Inc. All rights reserved.

NORTH

0 2 4 Miles

GEOSCIENCE
GEOSCIENCE Support Services, Inc.
P.O. Box 220, Claremont, CA 91711
Tel: (909) 451-6650 Fax: (909) 451-6638
www.gssiwater.com

Figure 29

GIS_proj/mcwsp_cal_am/rbf_boring_tech_memo_7-14/4_Fig_29_wells_and_x-secs_7-14.mxd

A
South

A'
North

Elevation, ft amsl

200
100
0
-100
-200
-300
-400
-500
-600
-700
-800
-900
-1,000
-1,100
-1,200

6,000
12,000
18,000
24,000
30,000
36,000
42,000
48,000
54,000
60,000

Cross-Section G-G'
Cross-Section 3-3'
Cross-Section 1-1'
Cross-Section F-F'
Cross-Section E-E'
Cross-Section D-D'

14S/02E-24L53
14S/01E-24L05
14S/01E-13J02
14S/02E-18E01
14S/02E-07L04
14S/02E-07L05
14S/02E07F02
14S/02E07A02
14S/02E07A01
14S/02E-06R02
14S/02E-06L01
14S/02E-06J03
14S/02E-05C03
14S/02E-05F04
13S/02E-32N01
13S/02E-32P01
13S/02E-32N02
13S/02E-32E05
13S/02E-32E03
13S/02E-32J03
13S/02E-29J01
13S/02E-28M02
13S/02E-28E01
13S/02E-28B01

Pacific Ocean
Dune Sand Aquifer
180-Foot Equivalent Aquifer
180/400-Foot Aquitard
Salinas Valley Aquitard
Perched "A" Aquifer
180-Foot Aquifer
400-Foot Aquifer

Legend

- COARSE GRAVEL/SAND
- GRAVEL
- BOULDERS
- GRAVEL/SAND
- TOPSOIL
- SAND
- SAND, BLUE
- SAND, RED
- SAND,WHITE
- SAND, YELLOW
- COARSE SAND
- FINE SAND
- QUICKSAND
- SEDIMENT
- SANDSTONE
- GRAVEL/CLAY
- GRAVELLY CLAY
- GRAVEL/ROCKS/CLAY
- SANDY BLUE CLAY
- SAND/GRAVEL/CLAY
- SAND/CLAY
- SANDY CLAY
- ADOBE
- DECOMPOSED GRANITE
- CLAY, BLUE
- CLAY, BROWN
- CLAY, RED
- CLAY, WHITE
- CLAY, YELLOW
- CLAY
- SHALE
- GRANITE
- SEEPAGE
- OPEN II
- OPEN I

Hydrogeologic Contact (approximate)

Note:
Wells and logs from Kennedy/Jenks (2004), MACTEC (2005), and USGS WRIR 2-4003 (2002)

Bolded well names are wells shown on Figure 29; other logs from previous cross-sections

0 200 400
Vertical Approximate Scale Feet

0 6,000 12,000
Horizontal Approximate Scale Feet

GEOSCIENCE
GEOSCIENCE Support Services, Incorporated
P.O. Box 220, Claremont, CA 91711
Tel: (909) 451-6650 Fax: (909) 451-6638
www.gssiwater.com

CALIFORNIA AMERICAN WATER & RBF CONSULTING

HYDROGEOLOGIC CROSS-SECTION A-A'

Drawn: TC
Checked:
Approved:
Date: 8-Jul-14

Figure 30

Projects\ESA_and_ESA-CalAm\01) MPWSP\11) Logs_x-sections\x-section_A-A'_scale_MW

B
South

B'
North

Elevation, ft amsl

300
200
100
0
-100
-200
-300
-400
-500
-600
-700
-800

MW-OU2-30
Airfield
MP-BW-40
14S/02E-28C01
14S/02E-21N01
14S/02E-21E01
Cross-Section F-F'
Cross-Section 1-1'
14S/02E-21F02
14S/02E-15P01
14S/02E-16G01
14S/02E-16H01
14S/02E-16A02
Cross-Section E-E'
14S/02E-15B01
14S/02E-15C02
14S/02E-10M02
14S/02E-10H01
14S/02E-03K02
14S/02E-03R02
Cross-Section D-D'
14S/02E-02E02
14S/02E-02C03
13S/02E-36F01
APN-133013001

Dune Sand Aquifer
180-Foot Equivalent Aquifer
180/400-Foot Aquitard
Perched "A" Aquifer
Salinas Valley Aquitard
180-Foot Aquifer
400-Foot Aquifer

6,000
12,000
18,000
24,000
30,000
36,000
42,000
48,000
54,000
60,000

Legend

- COARSE GRAVEL/SAND
- GRAVEL
- BOULDERS
- GRAVEL/SAND
- TOPSOIL
- SAND
- SAND, BLUE
- SAND, RED
- SAND,WHITE
- SAND, YELLOW
- COARSE SAND
- FINE SAND
- QUICKSAND
- SEDIMENT
- SANDSTONE
- GRAVEL/CLAY
- GRAVELLY CLAY
- GRAVEL/ROCKS/CLAY
- SANDY BLUE CLAY
- SAND/GRAVEL/CLAY
- SAND/CLAY
- SANDY CLAY
- ADOBE
- DECOMPOSED GRANITE
- CLAY, BLUE
- CLAY, BROWN
- CLAY, RED
- CLAY, WHITE
- CLAY, YELLOW
- CLAY
- SHALE
- GRANITE
- SEEPAGE
- OPEN II
- OPEN I

Hydrogeologic Contact (approximate)

Note:
Wells and logs from Kennedy/Jenks (2004), MACTEC (2005), and USGS WRIR 2-4003 (2002)

Bolded well names are wells shown on Figure 29; other logs from previous cross-sections

0 200 400
Vertical Approximate Scale Feet

0 6,000 12,000
Horizontal Approximate Scale Feet

GEOSCIENCE
GEOSCIENCE Support Services, Incorporated
P.O. Box 220, Claremont, CA 91711
Tel: (909) 451-6650 Fax: (909) 451-6638
www.gssiwater.com

CALIFORNIA AMERICAN WATER & RBF CONSULTING

HYDROGEOLOGIC CROSS-SECTION B-B'

Drawn: TC
Checked:
Approved:
Date: 8-Jul-14

Figure 31

Projects\ESA_and_ESA-CalAm\01) MPWSP\11) Logs_x-sections\x-section_B-B'_MW

C
South

C'
North

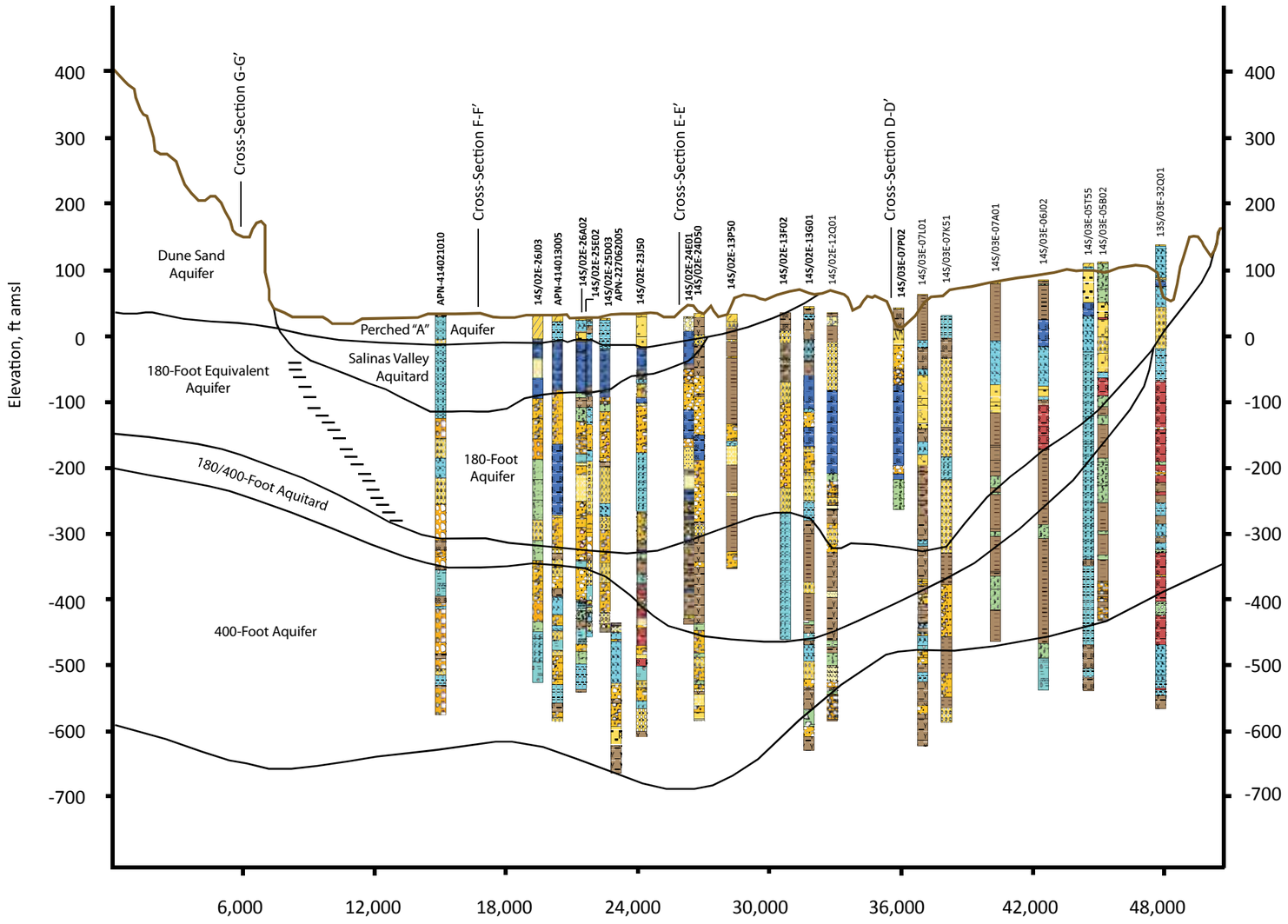

Legend

- COARSE GRAVEL/SAND
- GRAVEL
- BOULDERS
- GRAVEL/SAND
- TOPSOIL
- SAND
- SAND, BLUE
- SAND, RED
- SAND,WHITE
- SAND, YELLOW
- COARSE SAND
- FINE SAND
- QUICKSAND
- SEDIMENT
- SANDSTONE
- GRAVEL/CLAY
- GRAVELLY CLAY
- GRAVEL/ROCKS/CLAY
- SANDY BLUE CLAY
- SAND/GRAVEL/CLAY
- SAND/CLAY
- SANDY CLAY
- ADOBE
- DECOMPOSED GRANITE
- CLAY, BLUE
- CLAY, BROWN
- CLAY, RED
- CLAY, WHITE
- CLAY, YELLOW
- CLAY
- SHALE
- GRANITE
- SEEPAGE
- OPEN II
- OPEN I

Hydrogeologic Contact (approximate)

Note:
Wells and logs from Kennedy/Jenks (2004), MACTEC (2005), and USGS WRIR 2-4003 (2002)

Bolded well names are wells shown on Figure 29; other logs from previous cross-sections

0 200 400
Vertical Approximate Scale Feet

0 6,000 12,000
Horizontal Approximate Scale Feet

GEOSCIENCE
GEOSCIENCE Support Services, Incorporated
P.O. Box 220, Claremont, CA 91711
Tel: (909) 451-6650 Fax: (909) 451-6638
www.gssiwater.com

CALIFORNIA AMERICAN WATER & RBF CONSULTING

HYDROGEOLOGIC CROSS-SECTION C-C'

Drawn: TC
Checked:
Approved:
Date: 8-Jul-14

Figure 32

Projects\ESA_and_ESA-CalAm\01) MPWSP\11) Logs_x-sections\x-section_C-C'_MW

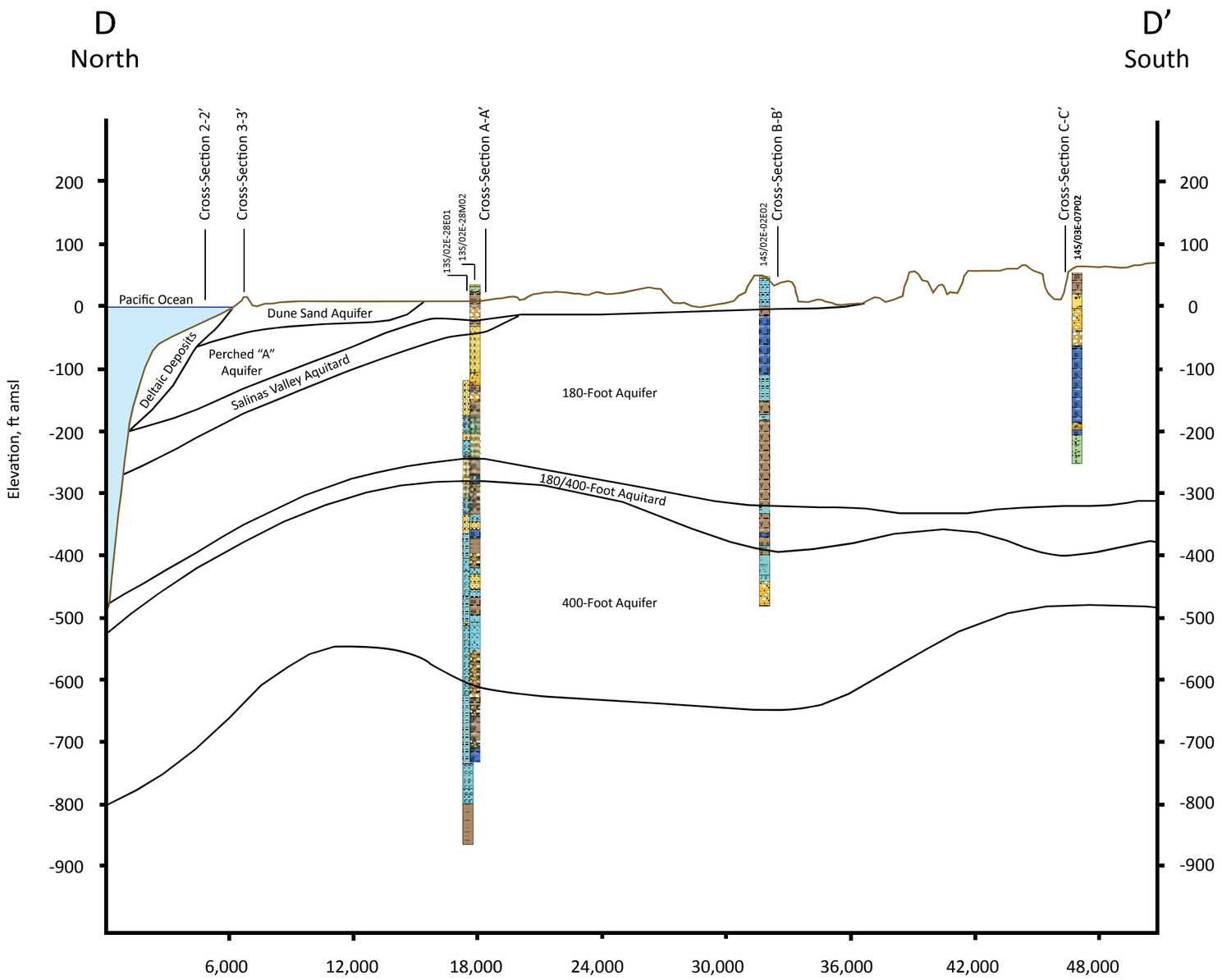

Legend

- COARSE GRAVEL/SAND
- GRAVEL
- BOULDERS
- GRAVEL/SAND
- TOPSOIL
- SAND
- SAND, BLUE
- SAND, RED
- SAND,WHITE
- SAND, YELLOW
- COARSE SAND
- FINE SAND
- QUICKSAND
- SEDIMENT
- SANDSTONE
- GRAVEL/CLAY
- GRAVELLY CLAY
- GRAVEL/ROCKS/CLAY
- SANDY BLUE CLAY
- SAND/GRAVEL/CLAY
- SAND/CLAY
- SANDY CLAY
- ADOBE
- DECOMPOSED GRANITE
- CLAY, BLUE
- CLAY, BROWN
- CLAY, RED
- CLAY, WHITE
- CLAY, YELLOW
- CLAY
- SHALE
- GRANITE
- SEEPAGE
- OPEN II
- OPEN I

Hydrogeologic Contact (approximate)

Note:
Wells and logs from Kennedy/Jenks (2004), MACTEC (2005), and USGS WRIR 2-4003 (2002)

Bolded well names are wells shown on Figure 29; other logs from previous cross-sections

0 200 400
Vertical Approximate Scale Feet

0 6,000 12,000
Horizontal Approximate Scale Feet

GEOSCIENCE
GEOSCIENCE Support Services, Incorporated
P.O. Box 220, Claremont, CA 91711
Tel: (909) 451-6650 Fax: (909) 451-6638
www.gssiwater.com

CALIFORNIA AMERICAN WATER & RBF CONSULTING

HYDROGEOLOGIC CROSS-SECTION D-D'

Drawn: TC | Checked: | Approved: | Date: 8-Jul-14

Figure 33

Projects\ESA_and_ESA-CalAm\01) MPWSP\11) Logs_x-sections\x-section_D-D'_MW.ai

E
North

E'
South

Cross-Section 3-3'
Cross-Section A-A'
Cross-Section B-B'
Cross-Section C-C'

145/02E-05C03
145/02E-06J03
145/02E-10M02
145/02E-15C02
145/02E-15B01
145/02E-24D50
145/02E-24E01
145/02E-23J50

Pacific Ocean
Deltaic Deposits
Perched "A" Aquifer
Salinas Valley Aquitard
180-Foot Aquifer
180/400-Foot Aquitard
400-Foot Aquifer

Elevation, ft amsl

100
0
-100
-200
-300
-400
-500
-600
-700
-800
-900
-1,000

6,000
12,000
18,000
24,000
30,000
36,000
42,000
48,000
54,000
60,000

Legend

- COARSE GRAVEL/SAND
- GRAVEL
- BOULDERS
- GRAVEL/SAND
- TOPSOIL
- SAND
- SAND, BLUE
- SAND, RED
- SAND,WHITE
- SAND, YELLOW
- COARSE SAND
- FINE SAND
- QUICKSAND
- SEDIMENT
- SANDSTONE
- GRAVEL/CLAY
- GRAVELLY CLAY
- GRAVEL/ROCKS/CLAY
- SANDY BLUE CLAY
- SAND/GRAVEL/CLAY
- SAND/CLAY
- SANDY CLAY
- ADOBE
- DECOMPOSED GRANITE
- CLAY, BLUE
- CLAY, BROWN
- CLAY, RED
- CLAY, WHITE
- CLAY, YELLOW
- CLAY
- SHALE
- GRANITE
- SEEPAGE
- OPEN II
- OPEN I

Hydrogeologic Contact (approximate)

Note:
Wells and logs from Kennedy/Jenks (2004), MACTEC (2005), and USGS WRIR 2-4003 (2002)

Bolded well names are wells shown on Figure 29; other logs from previous cross-sections

0 200 400
Vertical Approximate Scale Feet

0 6,000 12,000
Horizontal Approximate Scale Feet

GEOSCIENCE
GEOSCIENCE Support Services, Incorporated
P.O. Box 220, Claremont, CA 91711
Tel: (909) 451-6650 Fax: (909) 451-6638
www.gssiwater.com

CALIFORNIA AMERICAN WATER & RBF CONSULTING

HYDROGEOLOGIC CROSS-SECTION E-E'

Drawn: TC
Checked:
Approved:
Date: 8-Jul-14

Figure 34

Projects\ESA_and_ESA-CalAm\01) MPWSP\11) Logs_x-sections\x-section_E-E'_rev

F
North

F'
South

Cross-Section 3-3'
Cross-Section A-A'
14S/2E-7L4
14S/2E-21E1 (Projected 3,120 ft NW parallel to bluff face)
14S/2E-21F2
Cross-Section 1-1'
Cross-Section B-B'
APN-414021010
Cross-Section C-C'

Perched "A" Aquifer
Pacific Ocean
Dune Sand Aquifer
Perched "A" Aquifer
SVA
Salinas Valley Aquitard
Deltaic Deposits
180-Foot Equivalent Aquifer
180-Foot Aquifer
180/400-Foot Aquitard
400-Foot Aquifer

Elevation, ft amsl

100
0
-100
-200
-300
-400
-500
-600
-700
-800
-900
-1,000

6,000
12,000
18,000
24,000
30,000
36,000
42,000
48,000
54,000
60,000
66,000
72,000

Legend

- COARSE GRAVEL/SAND
- GRAVEL
- BOULDERS
- GRAVEL/SAND
- TOPSOIL
- SAND
- SAND, BLUE
- SAND, RED
- SAND,WHITE
- SAND, YELLOW
- COARSE SAND
- FINE SAND
- QUICKSAND
- SEDIMENT
- SANDSTONE
- GRAVEL/CLAY
- GRAVELLY CLAY
- GRAVEL/ROCKS/CLAY
- SANDY BLUE CLAY
- SAND/GRAVEL/CLAY
- SAND/CLAY
- SANDY CLAY
- ADOBE
- DECOMPOSED GRANITE
- CLAY, BLUE
- CLAY, BROWN
- CLAY, RED
- CLAY, WHITE
- CLAY, YELLOW
- CLAY
- SHALE
- GRANITE
- SEEPAGE
- OPEN II
- OPEN I
- Hydrogeologic Contact (approximate)

Note:
Wells and logs from Kennedy/Jenks (2004), MACTEC (2005), and USGS WRIR 2-4003 (2002)

Bolded well names are wells shown on Figure 29; other logs from previous cross-sections

0 200 400
Vertical Approximate Scale Feet

0 6,000 12,000
Horizontal Approximate Scale Feet

GEOSCIENCE
GEOSCIENCE Support Services, Incorporated
P.O. Box 220, Claremont, CA 91711
Tel: (909) 451-6650 Fax: (909) 451-6638
www.gssiwater.com

CALIFORNIA AMERICAN WATER & RBF CONSULTING

HYDROGEOLOGIC CROSS-SECTION F-F'

Drawn: TC
Checked:
Approved:
Date: 8-Jul-14

Figure 35

Projects\ESA_and_ESA-CalAm\01) MPWSP\11) Logs_x-sections\x-section_F-F'_rev

G
North

G'
South

Cross-Section 1-1'
Cross-Section A-A'
Cross-Section 3-3'
Cross-Section B-B'
Cross-Section C-C'

14S/01E-24L53
14S/01E-24L05
Airfield
MP-BW-42

Salinas Valley Aquitard

Pacific Ocean
Deltaic Deposits
Dune Sand Aquifer
180-Foot Equivalent Aquifer
180/400-Foot Aquitard
400-Foot Aquifer

Elevation, ft amsl

200
100
0
-100
-200
-300
-400
-500
-600
-700
-800
-900
-1,000
-1,100

6,000
12,000
18,000
24,000
30,000
36,000
42,000
48,000
54,000
60,000
66,000
72,000

Legend

- COARSE GRAVEL/SAND
- GRAVEL
- BOULDERS
- GRAVEL/SAND
- TOPSOIL
- SAND
- SAND, BLUE
- SAND, RED
- SAND,WHITE
- SAND, YELLOW
- COARSE SAND
- FINE SAND
- QUICKSAND
- SEDIMENT
- SANDSTONE
- GRAVEL/CLAY
- GRAVELLY CLAY
- GRAVEL/ROCKS/CLAY
- SANDY BLUE CLAY
- SAND/GRAVEL/CLAY
- SAND/CLAY
- SANDY CLAY
- ADOBE
- DECOMPOSED GRANITE
- CLAY, BLUE
- CLAY, BROWN
- CLAY, RED
- CLAY, WHITE
- CLAY, YELLOW
- CLAY
- SHALE
- GRANITE
- SEEPAGE
- OPEN II
- OPEN I
- Hydrogeologic Contact (approximate)

Note:
Wells and logs from Kennedy/Jenks (2004), MACTEC (2005), and USGS WRIR 2-4003 (2002)

Bolded well names are wells shown on Figure 29; other logs from previous cross-sections

0 200 400
Vertical Approximate Scale Feet

0 6,000 12,000
Horizontal Approximate Scale Feet

GEOSCIENCE
GEOSCIENCE Support Services, Incorporated
P.O. Box 220, Claremont, CA 91711
Tel: (909) 451-6650 Fax: (909) 451-6638
www.gssiwater.com

CALIFORNIA AMERICAN WATER & RBF CONSULTING

HYDROGEOLOGIC CROSS-SECTION G-G'

Drawn: TC
Checked:
Approved:
Date: 8-Jul-14

Figure 36

Projects\ESA_and_ESA-CalAm\01) MPWSP\11) Logs_x-sections\Fig_7_x-section_G-G'_monterey

THICKNESS OF DUNE SAND, PERCHED "A", AND DELTAIC DEPOSIT AQUIFERS (MODEL LAYER 2)

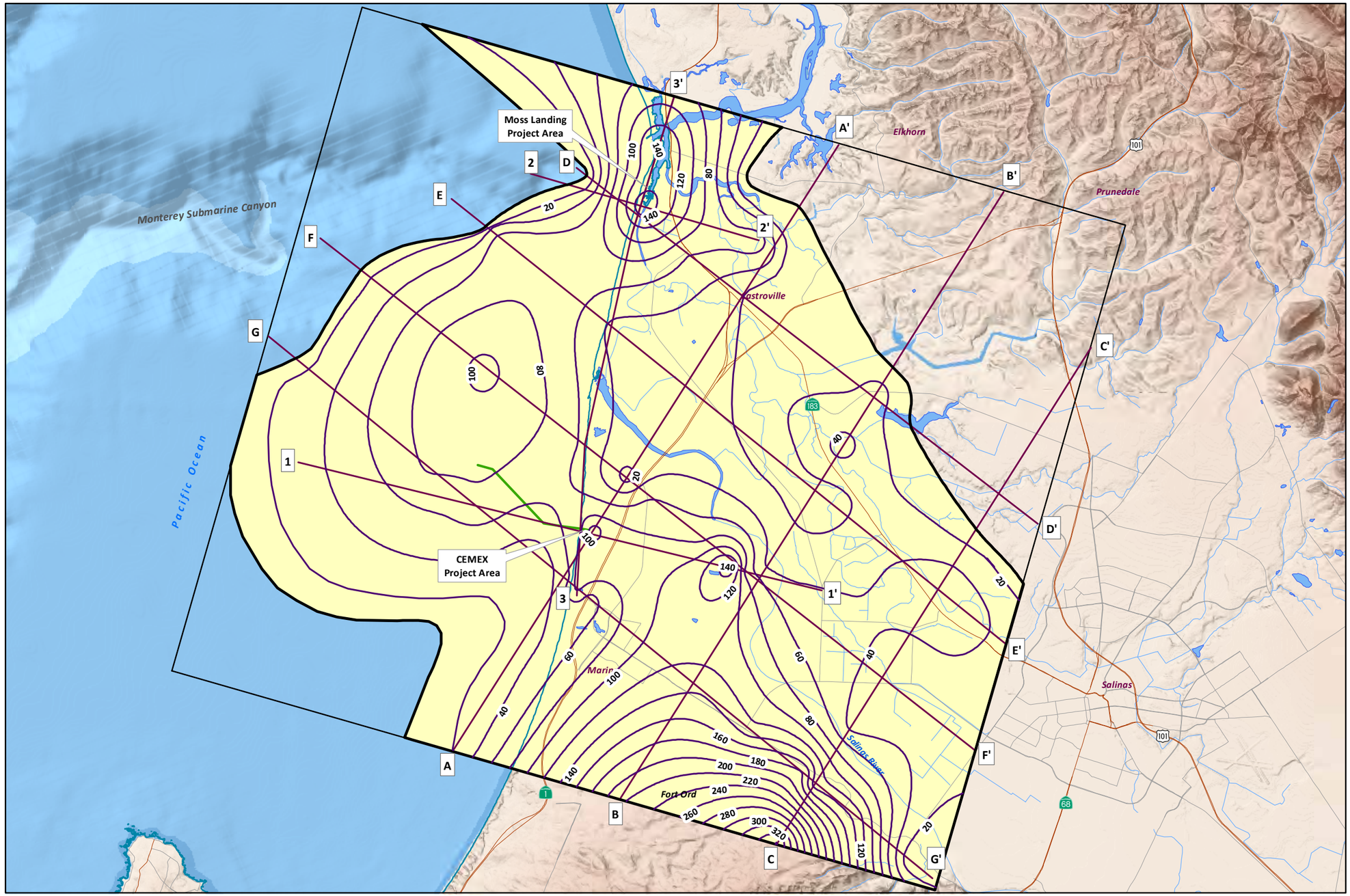

EXPLANATION

- Boundary of Dune Sand, Perched "A", and Deltaic Deposit Aquifers
- 20 — Aquifer Thickness (ft)
- 1 — 1' Cross-Section Location (See Figures 7-9 and 30-36)
- Pipeline Outfall
- North Marina Groundwater Model Boundary
- Mean High Tide (DOC et al., 2011)

8-Jul-14

Prepared by: DWB. Map Projection: State Plane 1983, Zone IV.

© 2014, GEOSCIENCE Support Services, Inc. All rights reserved.

NORTH

0 2 4 Miles

GEOSCIENCE

GEOSCIENCE Support Services, Inc.
P.O. Box 220, Claremont, CA 91711
Tel: (909) 451-6650 Fax: (909) 451-6638
www.gssiwater.com

Figure 37

GIS_proj/mcwsp_cal_am/rbf_boring_tech_memo_7-14/4_Fig_37_layer2_Thickness_7-14.mxd

THICKNESS OF SALINAS VALLEY AQUITARD (MODEL LAYER 3)

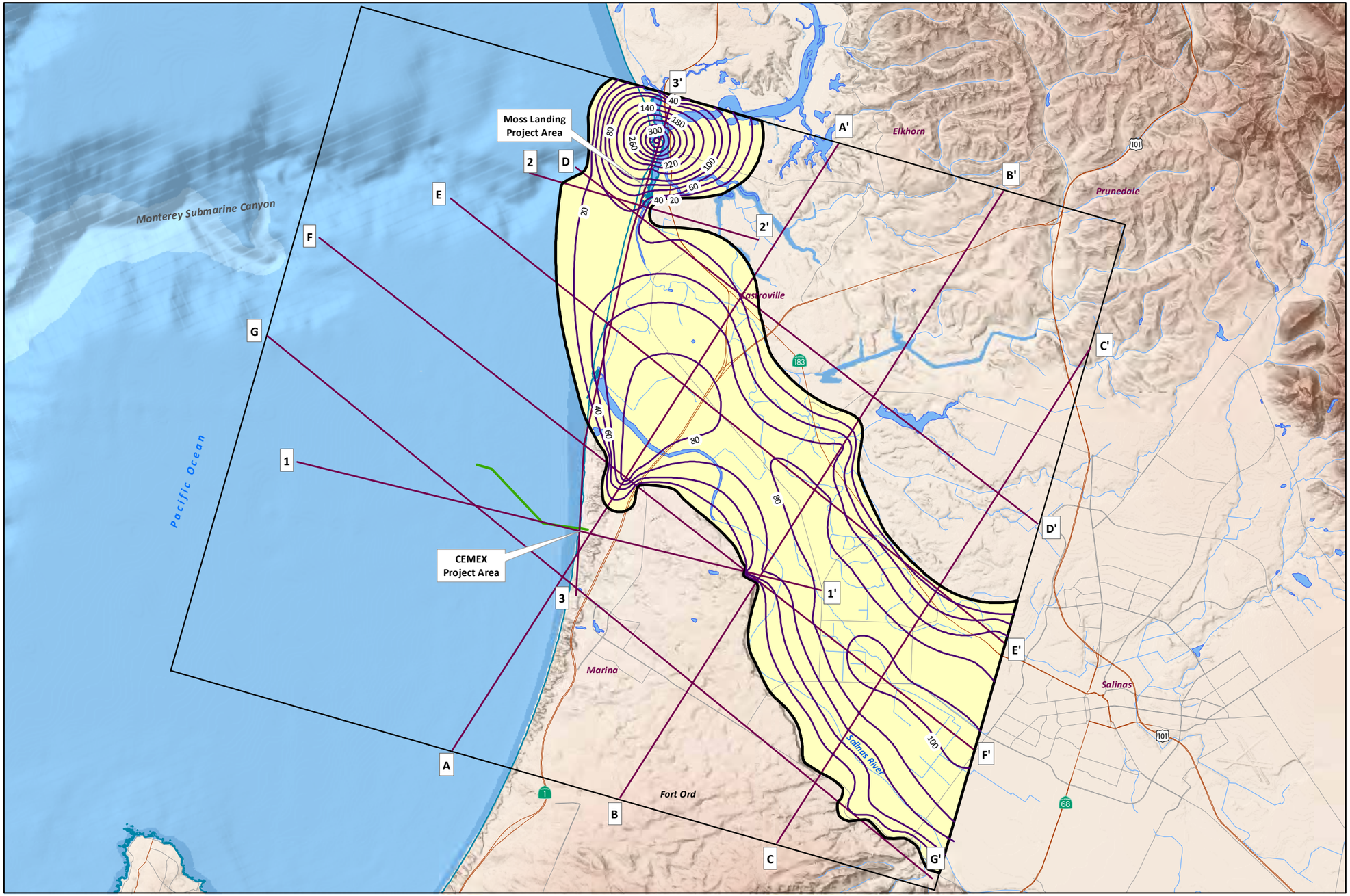

EXPLANATION

- Boundary of Salinas Valley Aquitard
- 20 — Aquitard Thickness (ft)
- 1 — 1' Cross-Section Location (See Figures 7-9 and 30-36)
- Pipeline Outfall
- North Marina Groundwater Model Boundary
- Mean High Tide (DOC et al., 2011)

8-Jul-14

Prepared: DWB. Map Projection: State Plane 1983, Zone IV.

© 2014, GEOSCIENCE Support Services, Inc. All rights reserved.

NORTH

0 2 4 Miles

GEOSCIENCE
GEOSCIENCE Support Services, Inc.
P.O. Box 220, Claremont, CA 91711
Tel: (909) 451-6650 Fax: (909) 451-6638
www.gssiwater.com

Figure 38

GIS_proj/mcwsp_cal_am/rbf_boring_tech_memo_7-14/4_Fig_38_layer3_Thickness_7-14.mxd

THICKNESS OF 180-FOOT AND 180-FOOT EQIVALENT AQUIFERS (MODEL LAYER 4)

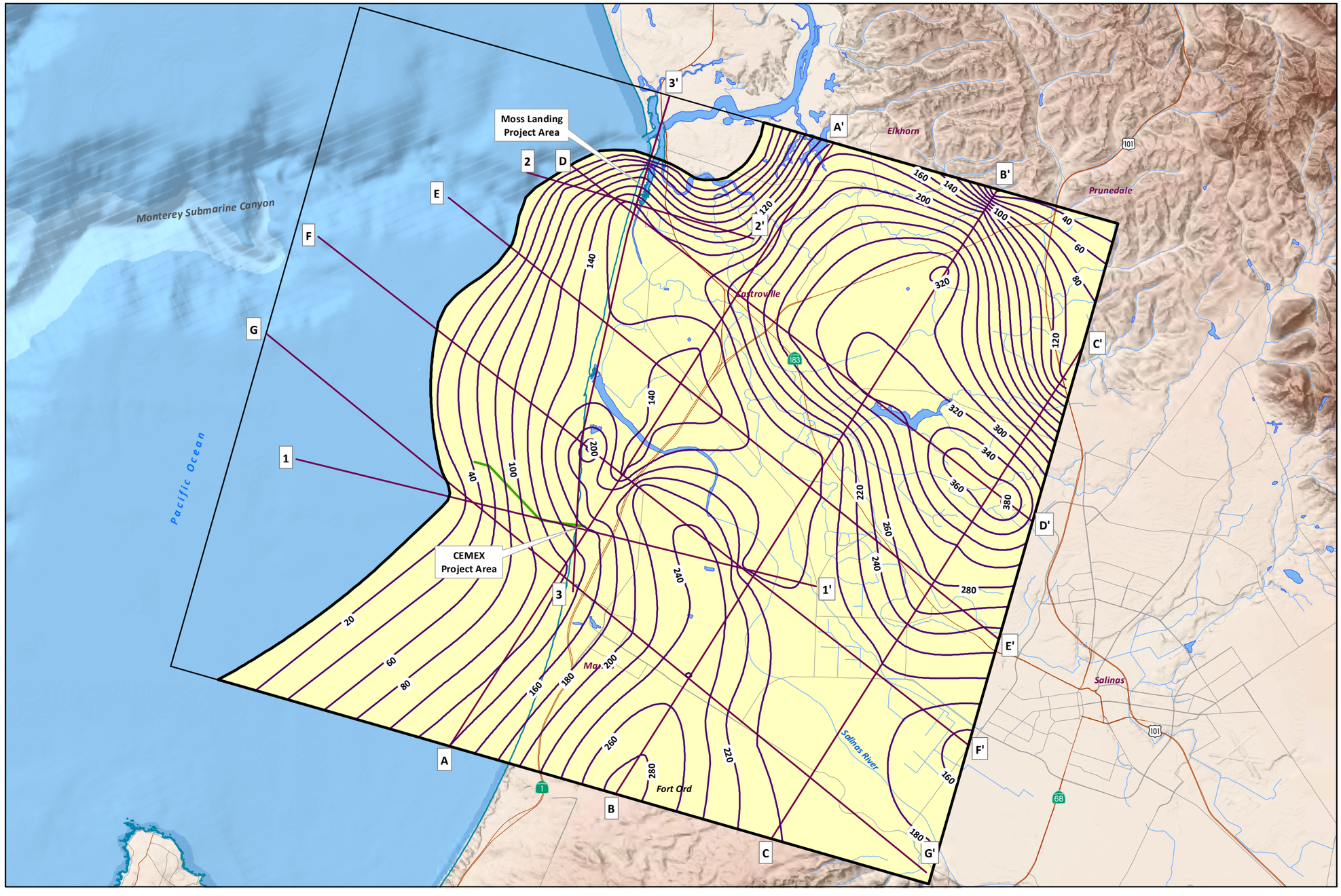

EXPLANATION

- Boundary of 180-Foot and 180-Foot Equivalent Aquifers
- 20 — Aquifer Thickness (ft)
- 1 — 1' Cross-Section Location (See Figures 7-9 and 30-36)
- Pipeline Outfall
- North Marina Groundwater Model Boundary
- Mean High Tide (DOC et al., 2011)

8-Jul-14

Prepared by: DWB. Map Projection: State Plane 1983, Zone IV.

© 2014, GEOSCIENCE Support Services, Inc. All rights reserved.

NORTH

0 2 4 Miles

GEOSCIENCE Support Services, Inc.
P.O. Box 220, Claremont, CA 91711
Tel: (909) 451-6650 Fax: (909) 451-6638
www.gssiwater.com

Figure 39

GIS_proj/mcwsp_cal_am/rbf_boring_tech_memo_7-14/4_Fig_39_layer4_Thickness_7-14.mxd

THICKNESS OF 180/400-FOOT AQUITARD (MODEL LAYER 5)

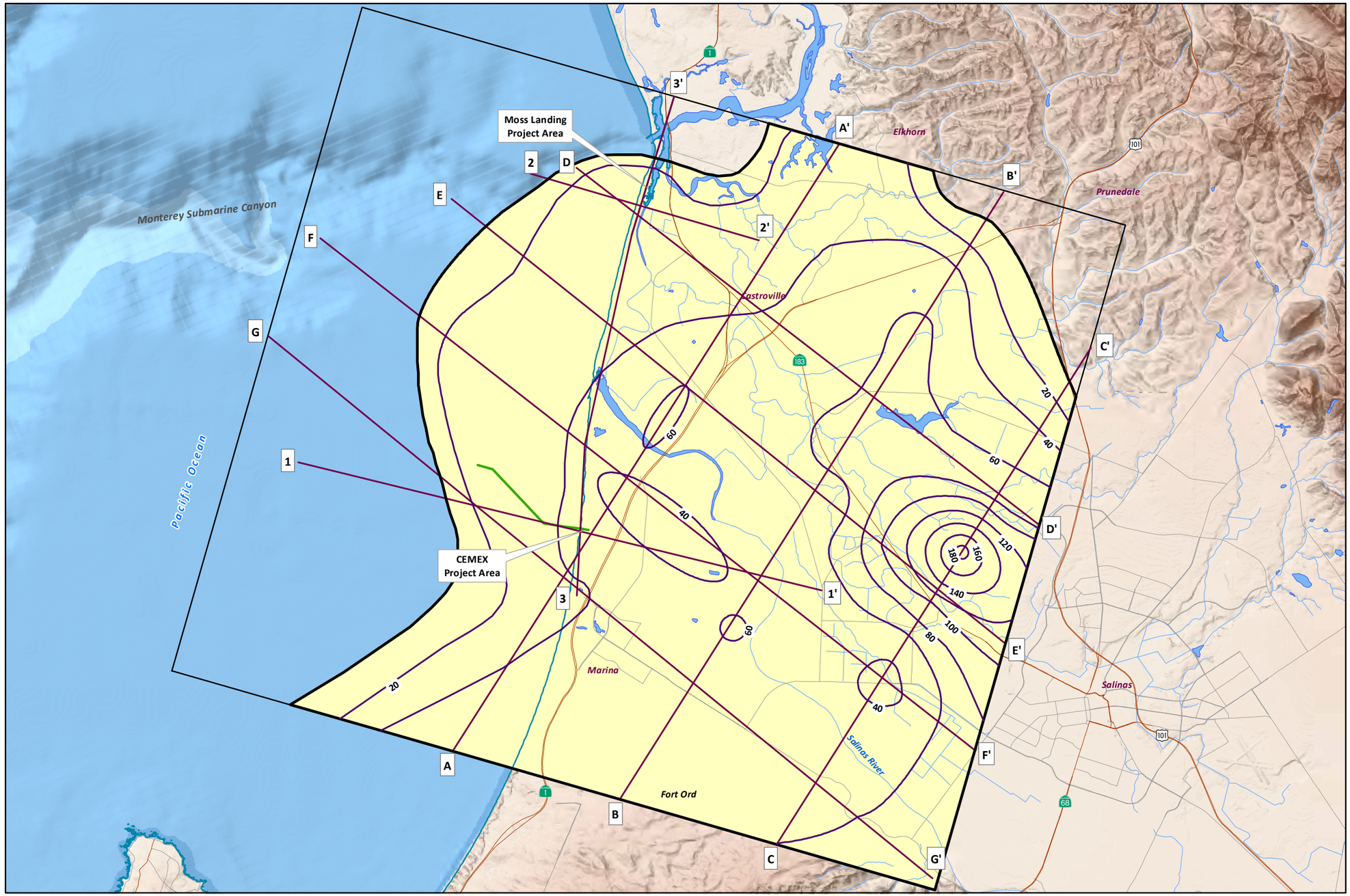

EXPLANATION

- Boundary of 180/480-Foot Aquitard
- 20 — Aquitard Thickness (ft)
- 1 — 1' Cross-Section Location (See Figures 7-9 and 30-36)
- Pipeline Outfall
- North Marina Groundwater Model Boundary
- Mean High Tide (DOC et al., 2011)

8-Jul-14

Prepared by: DWB. Map Projection: State Plane 1983, Zone IV.

© 2014, GEOSCIENCE Support Services, Inc. All rights reserved.

NORTH

0 2 4 Miles

GEOSCIENCE Support Services, Inc.
P.O. Box 220, Claremont, CA 91711
Tel: (909) 451-6650 Fax: (909) 451-6638
www.gssiwater.com

Figure 40

GIS_proj/mcwsp_cal_am/rbf_boring_tech_memo_7-14/4_Fig_40_layer4_Thickness_7-14.mxd

THICKNESS OF 400-FOOT AQUIFER (MODEL LAYER 6)

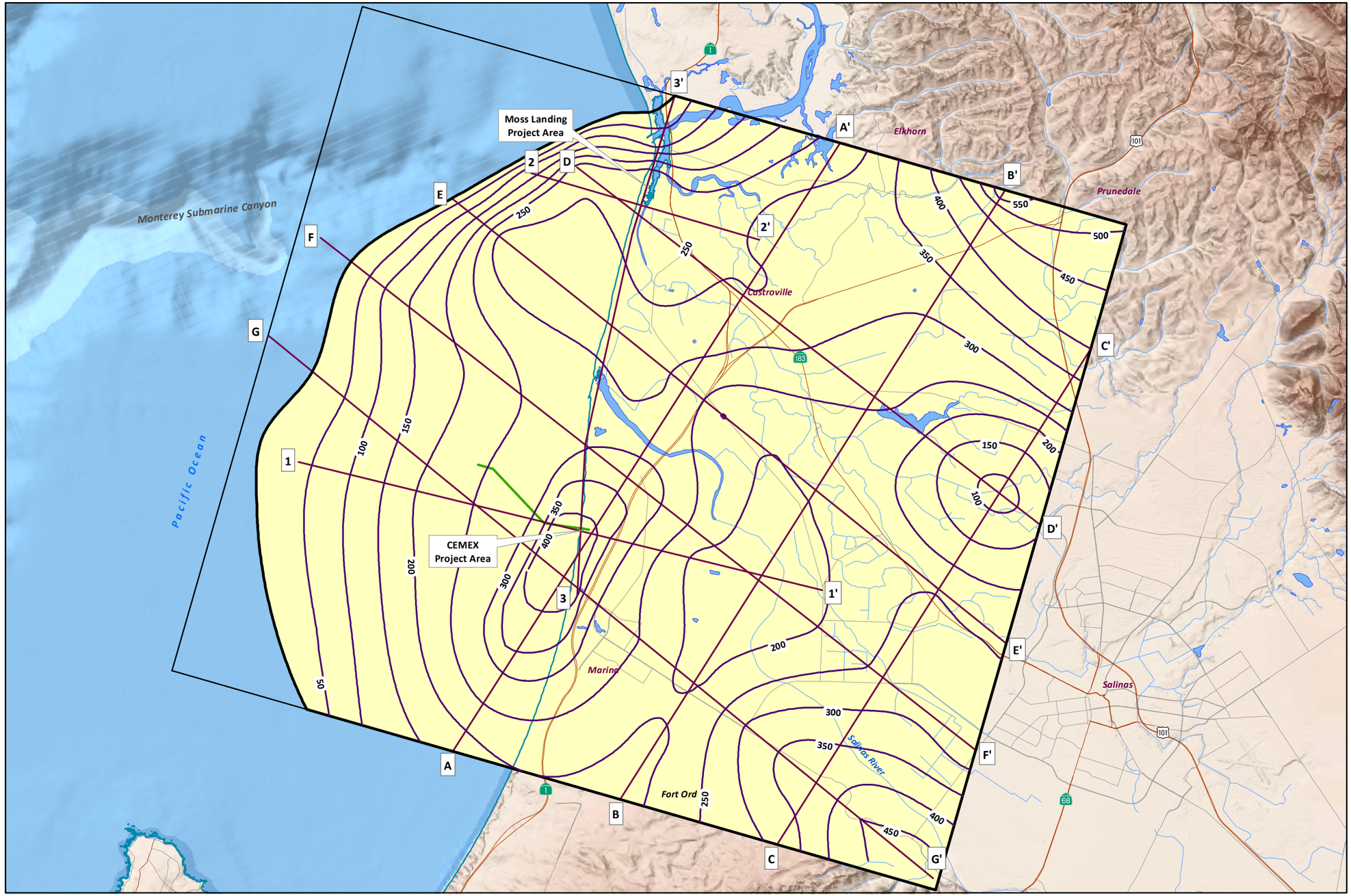

EXPLANATION

- Boundary of 400-Foot Aquifer
- 20 — Aquifer Thickness (ft)
- 1 — 1' Cross-Section Location (See Figures 7-9 and 30-36)
- Pipeline Outfall
- North Marina Groundwater Model Boundary
- Mean High Tide (DOC et al., 2011)

8-Jul-14

Prepared by: DWB. Map Projection: State Plane 1983, Zone IV.

© 2014, GEOSCIENCE Support Services, Inc. All rights reserved.

NORTH

0 2 4 Miles

GEOSCIENCE Support Services, Inc.
P.O. Box 220, Claremont, CA 91711
Tel: (909) 451-6650 Fax: (909) 451-6638
www.gssiwater.com

Figure 41

GIS_proj/mcwsp_cal_am/rbf_boring_tech_memo_7-14/4_Fig_41_layer6_Thickness_7-14.mxd

THICKNESS OF 400/900-FOOT AQUITARD (MODEL LAYER 7)

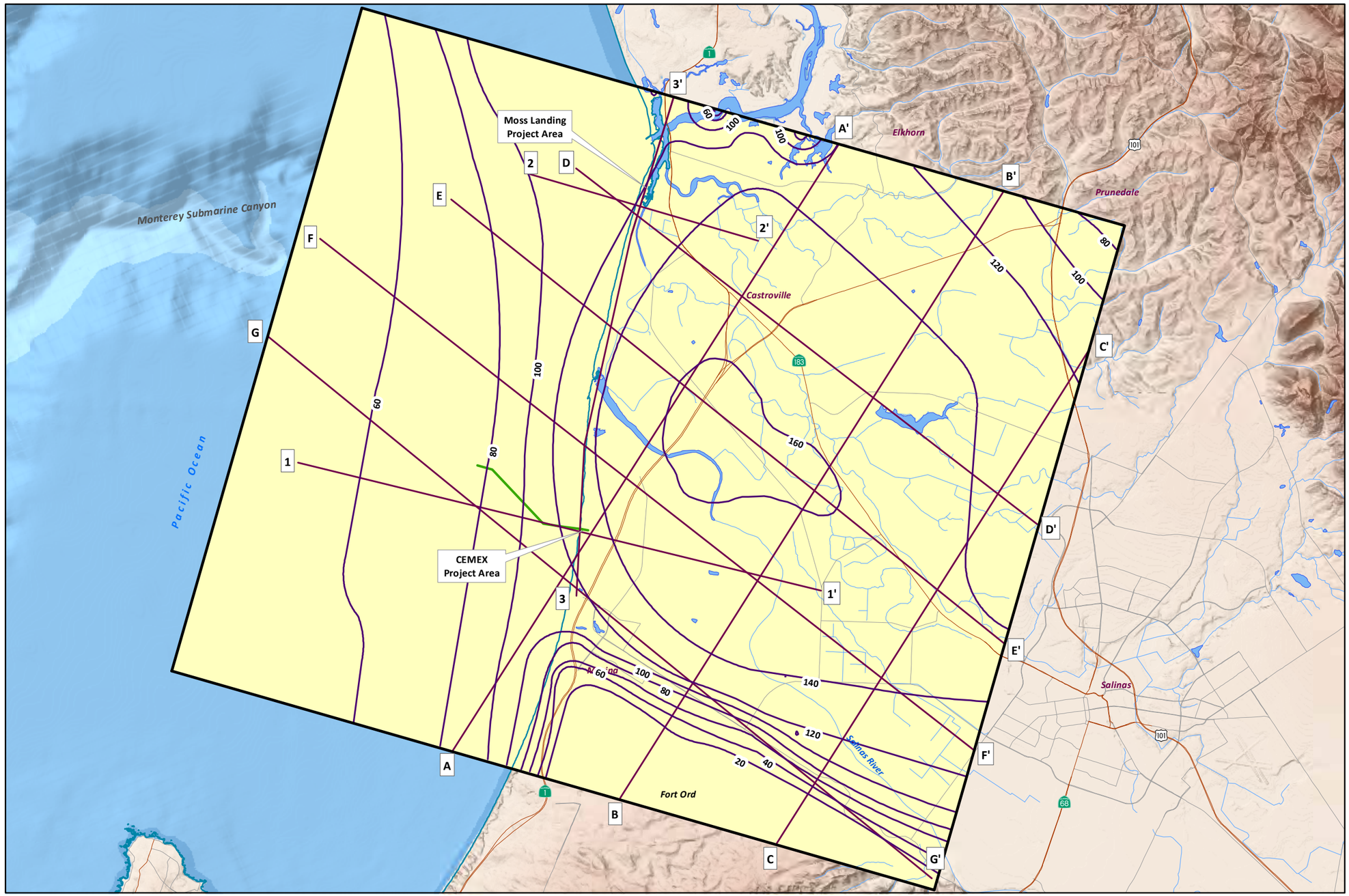

EXPLANATION

- Boundary of 400/900-Foot Aquitard and North Marina Groundwater Model Boundary
- 20 — Aquitard Thickness (ft)
- 1 — 1' Cross-Section Location (See Figures 7-9 and 30-36)
- Pipeline Outfall
- Mean High Tide (DOC et al., 2011)

8-Jul-14

Prepared by: DWB. Map Projection: State Plane 1983, Zone IV.

© 2014, GEOSCIENCE Support Services, Inc. All rights reserved.

NORTH

0 2 4 Miles

GEOSCIENCE Support Services, Inc.
P.O. Box 220, Claremont, CA 91711
Tel: (909) 451-6650 Fax: (909) 451-6638
www.gssiwater.com

Figure 42

GIS_proj/mcwsp_cal_am/rbf_boring_tech_memo_7-14/4_Fig_42_layer7_Thickness_7-14.mxd

THICKNESS OF 900-FOOT AQUIFER (MODEL LAYER 8)

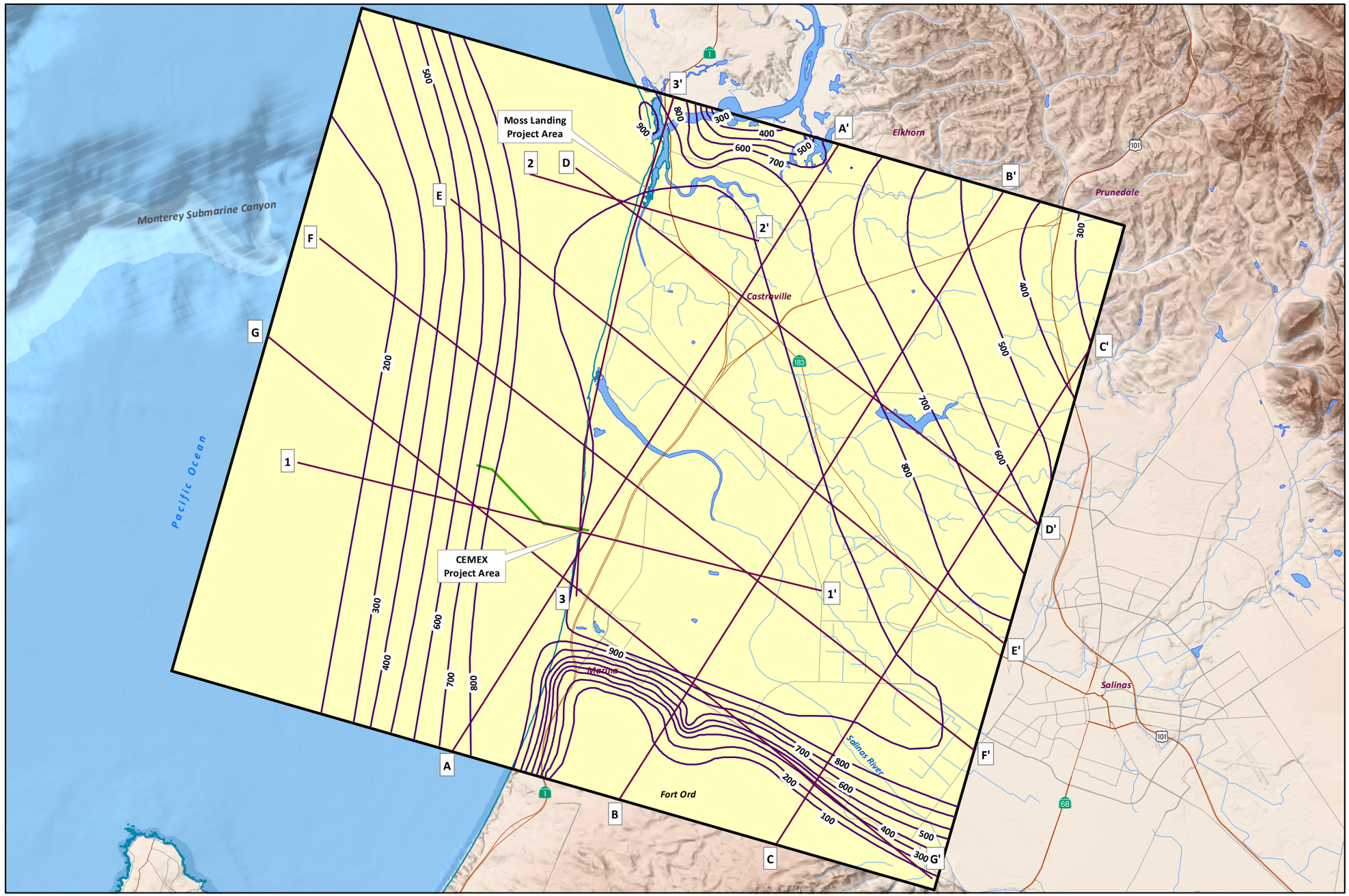

EXPLANATION

- Boundary of 900-Foot Aquifer and North Marina Groundater Model Boundary
- 20 — Aquifer Thickness (ft)
- 1 — 1' Cross-Section Location (See Figures 7-9 and 30-36)
- Pipeline Outfall
- Mean High Tide (DOC et al., 2011)

8-Jul-14

Prepared by: DWB. Map Projection: State Plane 1983, Zone IV.

© 2014, GEOSCIENCE Support Services, Inc. All rights reserved.

NORTH

0 2 4 Miles

GEOSCIENCE Support Services, Inc.
P.O. Box 220, Claremont, CA 91711
Tel: (909) 451-6650 Fax: (909) 451-6638
www.gssiwater.com

Figure 43

GIS_proj/mcwsp_cal_am/rbf_boring_tech_memo_7-14/4_Fig_43_layer8_Thickness_7-14.mxd

Sediment Texture versus Horizontal and Vertical Hydraulic Conductivity Values
Dune Sand/Perched "A" Aquifer near Potrero Road Site

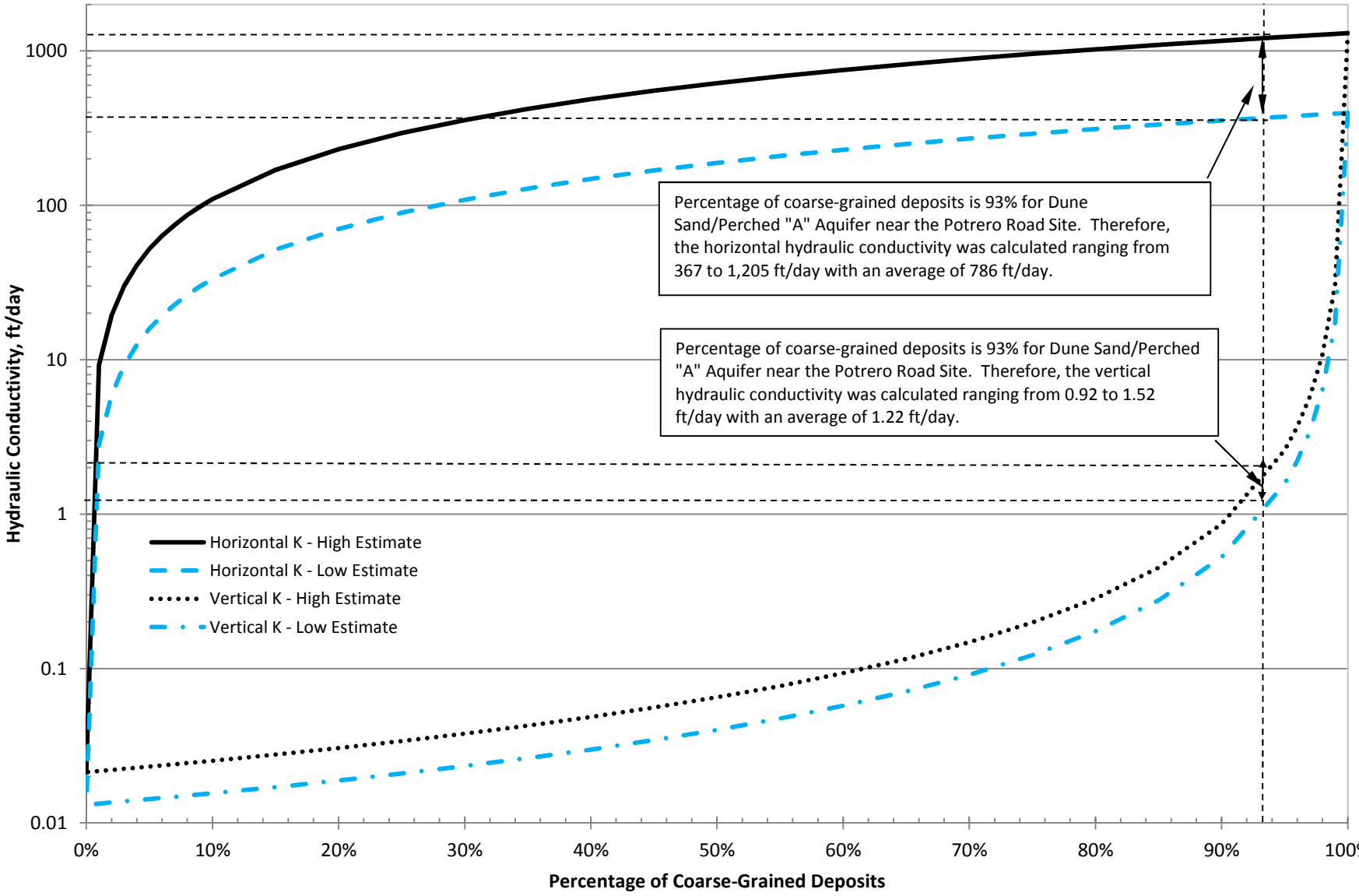

Figure 47

Sediment Texture versus Horizontal and Vertical Hydraulic Conductivity Values
Dune Sand/Perched "A" Aquifer near Moss Landing Site

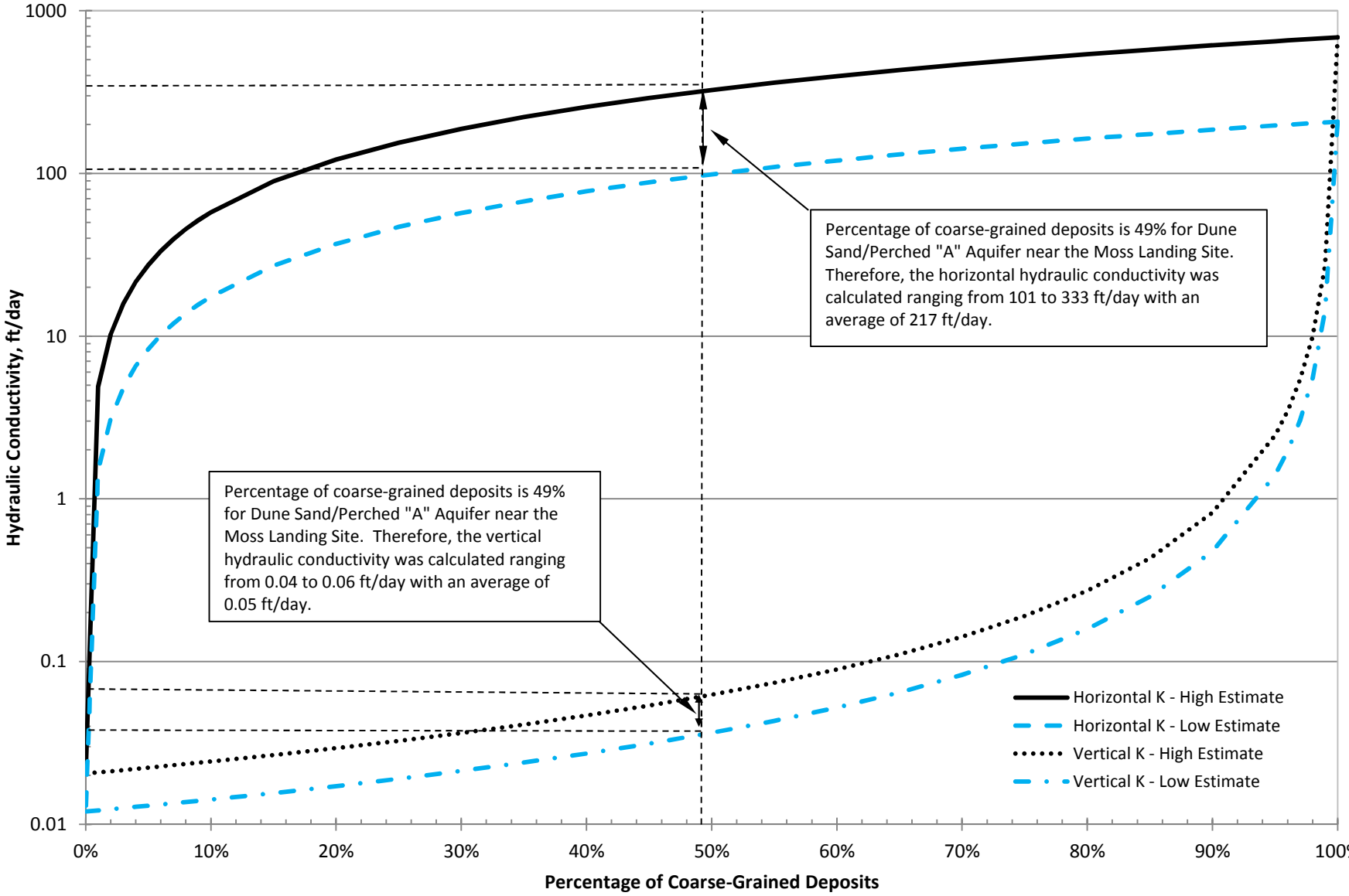

Figure 46

Sediment Texture versus Horizontal and Vertical Hydraulic Conductivity Values
180-Foot Equivalent Aquifer near CEMEX Site

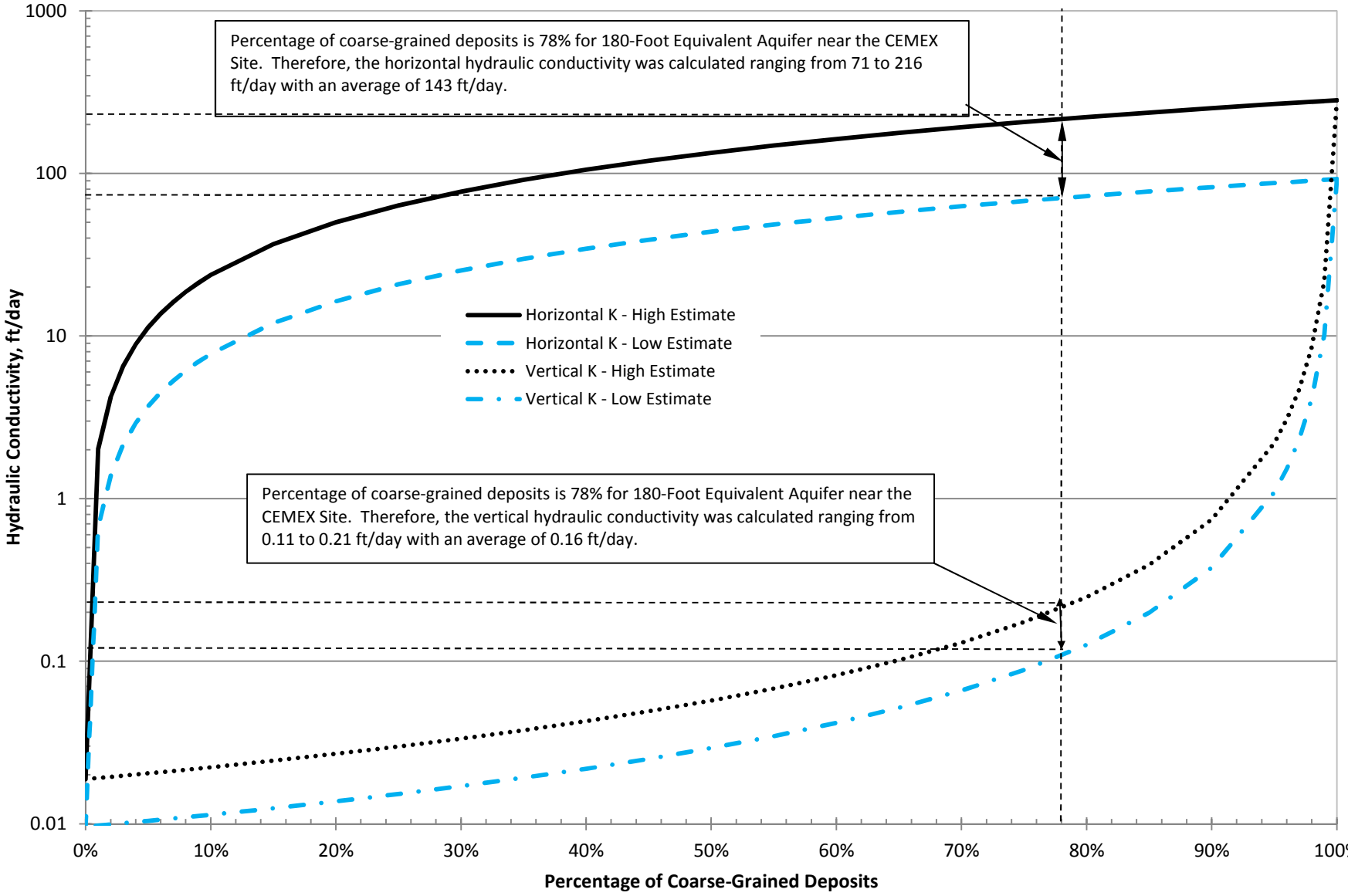

Figure 45

Sediment Texture versus Horizontal and Vertical Hydraulic Conductivity Values
Dune Sand Aquifer near CEMEX Site

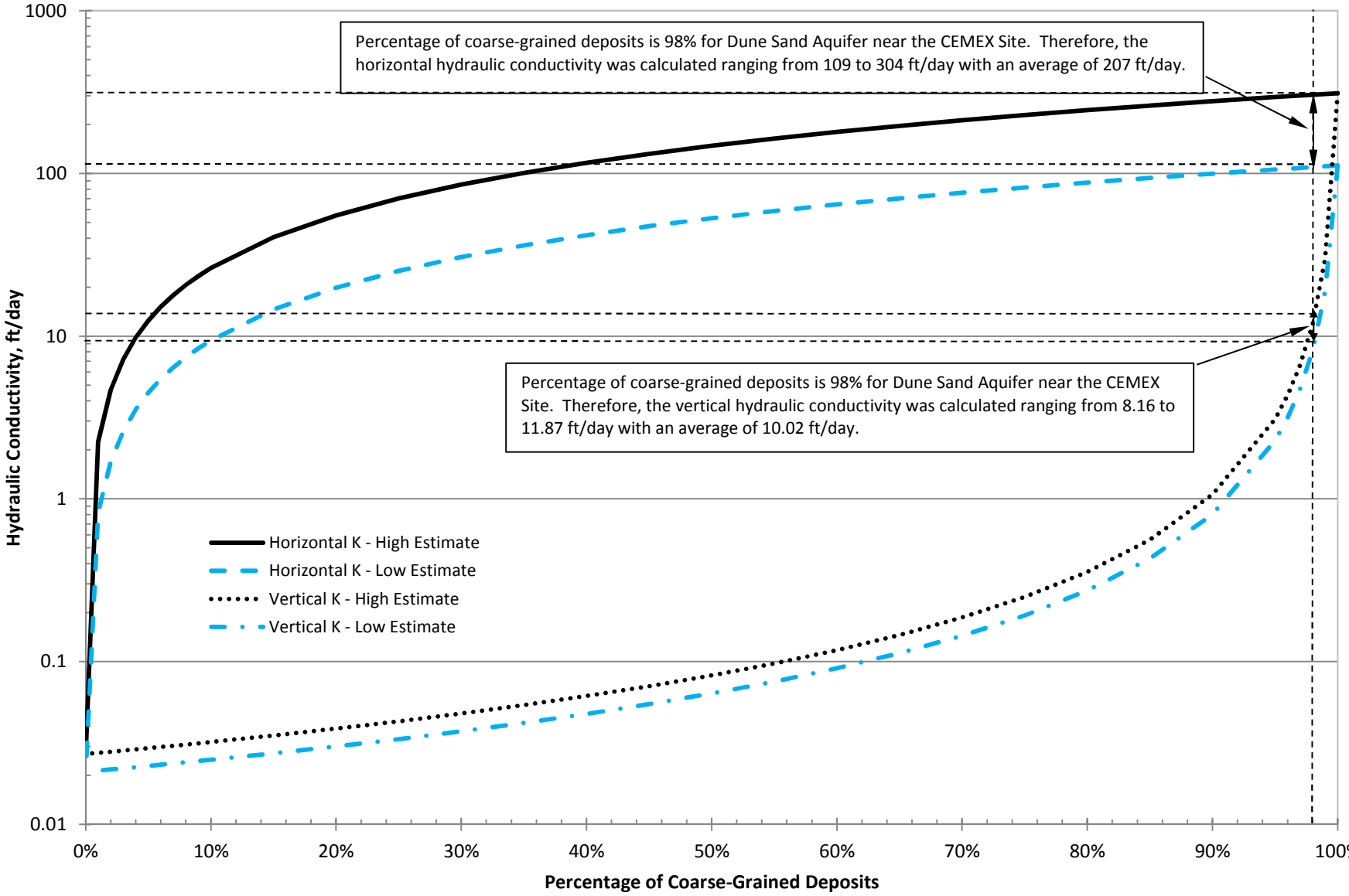

Figure 44

TABLES

GEOSCIENCE

Table 1

Hydraulic Conductivity Calculations

Borehole	Interval [ft bgs]	Method	Sample Type	K Direction	Hydraulic Conductivity, K [ft/day]	Lithology
CX-B1	79-79.5	Hazen	MGA	Horizontal	86	SM: Silty Sand
CX-B1	79-79.5	Krumbein-Monk	MGA	Horizontal	45	SM: Silty Sand
CX-B1	79-79.5	Kozeny-Carman	MGA	Horizontal	130	SM: Silty Sand
				Average :	**87**	
CX-B1	88-88.5	Hazen	MGA	Horizontal	535	SW: Well-Graded Sand
CX-B1	88-88.5	Krumbein-Monk	MGA	Horizontal	491	SW: Well-Graded Sand
CX-B1	88-88.5	Kozeny-Carman	MGA	Horizontal	2,115	SW: Well-Graded Sand
				Average :	**1,047**	
CX-B1	104.5-105	Hazen	MGA	Horizontal	79	SM: Silty Sand
CX-B1	104.5-105	Krumbein-Monk	MGA	Horizontal	40	SM: Silty Sand
CX-B1	104.5-105	Kozeny-Carman	MGA	Horizontal	112	SM: Silty Sand
				Average :	**77**	
CX-B1	115-116	Hazen	MGA	Horizontal	351	SW: Well-Graded Sand
CX-B1	115-116	Krumbein-Monk	MGA	Horizontal	249	SW: Well-Graded Sand
CX-B1	115-116	Kozeny-Carman	MGA	Horizontal	624	SW: Well-Graded Sand
				Average :	**408**	
CX-B1	187-188	Hazen	MGA	Horizontal	150	SM: Silty Sand
CX-B1	187-188	Krumbein-Monk	MGA	Horizontal	127	SM: Silty Sand
CX-B1	187-188	Kozeny-Carman	MGA	Horizontal	344	SM: Silty Sand
				Average :	**207**	
CX-B1	245-245	Hazen	MGA	Horizontal	399	GW: Gravel
CX-B1	245-245	Krumbein-Monk	MGA	Horizontal	334	GW: Gravel
CX-B1	245-245	Kozeny-Carman	MGA	Horizontal	849	GW: Gravel
				Average :	**527**	
CX-B1	295-296	Hazen	MGA	Horizontal	176	SP: Sand with Gravel
CX-B1	295-296	Krumbein-Monk	MGA	Horizontal	176	SP: Sand with Gravel
CX-B1	295-296	Kozeny-Carman	MGA	Horizontal	549	SP: Sand with Gravel
				Average :	**300**	
CX-B2	53	Hazen	MGA	Horizontal	371	SW: Well-Graded Sand
CX-B2	53	Krumbein-Monk	MGA	Horizontal	292	SW: Well-Graded Sand
CX-B2	53	Kozeny-Carman	MGA	Horizontal	770	SW: Well-Graded Sand
				Average :	**477**	
CX-B2	116	Hazen	MGA	Horizontal	24	SM: Silty Sand
CX-B2	116	Krumbein-Monk	MGA	Horizontal	16	SM: Silty Sand
CX-B2	116	Kozeny-Carman	MGA	Horizontal	65	SM: Silty Sand
				Average :	**35**	
CX-B2	141	Hazen	MGA	Horizontal	117	SP: Sand
CX-B2	141	Krumbein-Monk	MGA	Horizontal	95	SP: Sand
CX-B2	141	Kozeny-Carman	MGA	Horizontal	241	SP: Sand
				Average :	**151**	
CX-B2	203	Hazen	MGA	Horizontal	102	SP: Sand

Table 1

Hydraulic Conductivity Calculations

Borehole	Interval [ft bgs]	Method	Sample Type	K Direction	Hydraulic Conductivity, K [ft/day]	Lithology
CX-B2	203	Krumbein-Monk	MGA	Horizontal	72	SP: Sand
CX-B2	203	Kozeny-Carman	MGA	Horizontal	181	SP: Sand
				Average :	**118**	
CX-B2	273	Hazen	MGA	Horizontal	258	SW: Well-Graded Sand
CX-B2	273	Krumbein-Monk	MGA	Horizontal	206	SW: Well-Graded Sand
CX-B2	273	Kozeny-Carman	MGA	Horizontal	725	SW: Well-Graded Sand
				Average :	**396**	
CX-B3	45	Hazen	MGA	Horizontal	99	SP: Sand
CX-B3	45	Krumbein-Monk	MGA	Horizontal	74	SP: Sand
CX-B3	45	Kozeny-Carman	MGA	Horizontal	224	SP: Sand
				Average :	**132**	
CX-B3	121	Hazen	MGA	Horizontal	26	SM: Silty Sand
CX-B3	121	Krumbein-Monk	MGA	Horizontal	21	SM: Silty Sand
CX-B3	121	Kozeny-Carman	MGA	Horizontal	69	SM: Silty Sand
				Average :	**39**	
CX-B3	240	Hazen	MGA	Horizontal	191	SP: Sand
CX-B3	240	Krumbein-Monk	MGA	Horizontal	130	SP: Sand
CX-B3	240	Kozeny-Carman	MGA	Horizontal	509	SP: Sand
				Average :	**277**	
CX-B3	291	Hazen	MGA	Horizontal	373	SW: Well-Graded Sand
CX-B3	291	Krumbein-Monk	MGA	Horizontal	191	SW: Well-Graded Sand
CX-B3	291	Kozeny-Carman	MGA	Horizontal	829	SW: Well-Graded Sand
				Average :	**464**	
CX-B3	312	Hazen	MGA	Horizontal	258	SP: Sand
CX-B3	312	Krumbein-Monk	MGA	Horizontal	206	SP: Sand
CX-B3	312	Kozeny-Carman	MGA	Horizontal	725	SP: Sand
				Average :	**396**	
CX-B4	46-47	Hazen	MGA	Horizontal	374	SP: Sand
CX-B4	46-47	Krumbein-Monk	MGA	Horizontal	230	SP: Sand
CX-B4	46-47	Kozeny-Carman	MGA	Horizontal	628	SP: Sand
				Average :	**411**	
CX-B4	72-73	Hazen	MGA	Horizontal	45	SP: Sand
CX-B4	72-73	Krumbein-Monk	MGA	Horizontal	40	SP: Sand
CX-B4	72-73	Kozeny-Carman	MGA	Horizontal	102	SP: Sand
				Average :	**62**	
CX-B4	115-116	Hazen	MGA	Horizontal	31	SP: Sand
CX-B4	115-116	Krumbein-Monk	MGA	Horizontal	25	SP: Sand
CX-B4	115-116	Kozeny-Carman	MGA	Horizontal	74	SP: Sand
				Average :	**43**	
CX-B4	190-191	Hazen	MGA	Horizontal	121	SP: Sand
CX-B4	190-191	Krumbein-Monk	MGA	Horizontal	97	SP: Sand

Table 1

Hydraulic Conductivity Calculations

Borehole	Interval [ft bgs]	Method	Sample Type	K Direction	Hydraulic Conductivity, K [ft/day]	Lithology
CX-B4	190-191	Kozeny-Carman	MGA	Horizontal	248	SP: Sand
				Average :	**156**	
CX-B4	248-249	Hazen	MGA	Horizontal	202	SP: Sand
CX-B4	248-249	Krumbein-Monk	MGA	Horizontal	163	SP: Sand
CX-B4	248-249	Kozeny-Carman	MGA	Horizontal	380	SP: Sand
				Average :	**248**	
MDW-1	22-23	Hazen	MGA	Horizontal	163	SP: Sand
MDW-1	22-23	Krumbein-Monk	MGA	Horizontal	135	SP: Sand
MDW-1	22-23	Kozeny-Carman	MGA	Horizontal	300	SP: Sand
				Average :	**199**	
MDW-1	59-60	Hazen	MGA	Horizontal	113	SP: Sand
MDW-1	59-60	Krumbein-Monk	MGA	Horizontal	90	SP: Sand
MDW-1	59-60	Kozeny-Carman	MGA	Horizontal	224	SP: Sand
				Average :	**142**	
MDW-1	70-71	Hazen	MGA	Horizontal	385	SP: Sand
MDW-1	70-71	Krumbein-Monk	MGA	Horizontal	250	SP: Sand
MDW-1	70-71	Kozeny-Carman	MGA	Horizontal	730	SP: Sand
				Average :	**455**	
MDW-1	153-154	Hazen	MGA	Horizontal	394	SP: Sand with Gravel
MDW-1	153-154	Krumbein-Monk	MGA	Horizontal	302	SP: Sand with Gravel
MDW-1	153-154	Kozeny-Carman	MGA	Horizontal	984	SP: Sand with Gravel
				Average :	**560**	
MDW-1	181-182	Hazen	MGA	Horizontal	202	SP: Sand
MDW-1	181-182	Krumbein-Monk	MGA	Horizontal	161	SP: Sand
MDW-1	181-182	Kozeny-Carman	MGA	Horizontal	553	SP: Sand
				Average :	**305**	
ML-1	52-53	Hazen	MGA	Horizontal	411	SP: Sand
ML-1	52-53	Krumbein-Monk	MGA	Horizontal	227	SP: Sand
ML-1	52-53	Kozeny-Carman	MGA	Horizontal	951	SP: Sand
				Average :	**530**	
ML-1	58-59	Hazen	MGA	Horizontal	75	SP: Sand
ML-1	58-59	Krumbein-Monk	MGA	Horizontal	51	SP: Sand
ML-1	58-59	Kozeny-Carman	MGA	Horizontal	124	SP: Sand
				Average :	**83**	
ML-1	65-66	Hazen	MGA	Horizontal	85	SP: Sand
ML-1	65-66	Krumbein-Monk	MGA	Horizontal	57	SP: Sand
ML-1	65-66	Kozeny-Carman	MGA	Horizontal	140	SP: Sand
				Average :	**94**	
ML-1	88-89	Hazen	MGA	Horizontal	185	SP: Sand
ML-1	88-89	Krumbein-Monk	MGA	Horizontal	134	SP: Sand
ML-1	88-89	Kozeny-Carman	MGA	Horizontal	521	SP: Sand

Table 1

Hydraulic Conductivity Calculations

Borehole	Interval [ft bgs]	Method	Sample Type	K Direction	Hydraulic Conductivity, K [ft/day]	Lithology
				Average :	**280**	
ML-1	104-106	Hazen	MGA	Horizontal	125	SP: Sand
ML-1	104-106	Krumbein-Monk	MGA	Horizontal	93	SP: Sand
ML-1	104-106	Kozeny-Carman	MGA	Horizontal	312	SP: Sand
				Average :	**177**	
ML-1	108-109	Hazen	MGA	Horizontal	445	SP-SM: Sand with Silt and Gravel
ML-1	108-109	Krumbein-Monk	MGA	Horizontal	445	SP-SM: Sand with Silt and Gravel
ML-1	108-109	Kozeny-Carman	MGA	Horizontal	1,322	SP-SM: Sand with Silt and Gravel
				Average :	**738**	
ML-1	117-118	Hazen	MGA	Horizontal	469	SP: Sand with Gravel
ML-1	117-118	Krumbein-Monk	MGA	Horizontal	654	SP: Sand with Gravel
ML-1	117-118	Kozeny-Carman	MGA	Horizontal	1,175	SP: Sand with Gravel
				Average :	**766**	
ML-2	24-24.5	Hazen	MGA	Horizontal	497	SW: Well-Graded Sand
ML-2	24-24.5	Krumbein-Monk	MGA	Horizontal	383	SW: Well-Graded Sand
ML-2	24-24.5	Kozeny-Carman	MGA	Horizontal	1,090	SW: Well-Graded Sand
				Average :	**656**	
ML-2	50-50.5	Hazen	MGA	Horizontal	92	SP: Sand
ML-2	50-50.5	Krumbein-Monk	MGA	Horizontal	56	SP: Sand
ML-2	50-50.5	Kozeny-Carman	MGA	Horizontal	151	SP: Sand
				Average :	**100**	
ML-2	110.5-111	Hazen	MGA	Horizontal	517	SW: Well-Graded Sand with Gravel
ML-2	110.5-111	Krumbein-Monk	MGA	Horizontal	484	SW: Well-Graded Sand with Gravel
ML-2	110.5-111	Kozeny-Carman	MGA	Horizontal	949	SW: Well-Graded Sand with Gravel
				Average :	**650**	
ML-2	152-152.5	Hazen	MGA	Horizontal	21	SP: Sand
ML-2	152-152.5	Krumbein-Monk	MGA	Horizontal	12	SP: Sand
ML-2	152-152.5	Kozeny-Carman	MGA	Horizontal	53	SP: Sand
				Average :	**29**	
ML-2	188.5-189	Hazen	MGA	Horizontal	30	SP-SM: Sand with Silt
ML-2	188.5-189	Krumbein-Monk	MGA	Horizontal	18	SP-SM: Sand with Silt
ML-2	188.5-189	Kozeny-Carman	MGA	Horizontal	93	SP-SM: Sand with Silt
				Average :	**47**	
ML-3	109.5-110	Hazen	MGA	Horizontal	95	SP: Sand
ML-3	109.5-110	Krumbein-Monk	MGA	Horizontal	60	SP: Sand
ML-3	109.5-110	Kozeny-Carman	MGA	Horizontal	214	SP: Sand
				Average :	**123**	
ML-3	111.5-112	Hazen	MGA	Horizontal	337	SP: Sand
ML-3	111.5-112	Krumbein-Monk	MGA	Horizontal	273	SP: Sand
ML-3	111.5-112	Kozeny-Carman	MGA	Horizontal	914	SP: Sand
				Average :	**508**	

Table 1

Hydraulic Conductivity Calculations

Borehole	Interval [ft bgs]	Method	Sample Type	K Direction	Hydraulic Conductivity, K [ft/day]	Lithology
ML-3	182.5-183	Hazen	MGA	Horizontal	446	SW-SC: Sand with Clay and Gravel
ML-3	182.5-183	Krumbein-Monk	MGA	Horizontal	452	SW-SC: Sand with Clay and Gravel
ML-3	182.5-183	Kozeny-Carman	MGA	Horizontal	1,511	SW-SC: Sand with Clay and Gravel
				Average :	**803**	
ML-3	189-189.5	Hazen	MGA	Horizontal	118	SP: Sand
ML-3	189-189.5	Krumbein-Monk	MGA	Horizontal	95	SP: Sand
ML-3	189-189.5	Kozeny-Carman	MGA	Horizontal	355	SP: Sand
				Average :	**189**	
ML-3	195-195.5	Hazen	MGA	Horizontal	192	SW: Well-Graded Sand with Gravel
ML-3	195-195.5	Krumbein-Monk	MGA	Horizontal	367	SW: Well-Graded Sand with Gravel
ML-3	195-195.5	Kozeny-Carman	MGA	Horizontal	480	SW: Well-Graded Sand with Gravel
				Average :	**346**	
ML-4	28-28.5	Hazen	MGA	Horizontal	164	SP: Sand
ML-4	28-28.5	Krumbein-Monk	MGA	Horizontal	171	SP: Sand
ML-4	28-28.5	Kozeny-Carman	MGA	Horizontal	468	SP: Sand
				Average :	**268**	
ML-4	71-71.5	Hazen	MGA	Horizontal	25	SP: Sand
ML-4	71-71.5	Krumbein-Monk	MGA	Horizontal	21	SP: Sand
ML-4	71-71.5	Kozeny-Carman	MGA	Horizontal	79	SP: Sand
				Average :	**42**	
ML-4	112-112.5	Hazen	MGA	Horizontal	152	SP: Sand
ML-4	112-112.5	Krumbein-Monk	MGA	Horizontal	129	SP: Sand
ML-4	112-112.5	Kozeny-Carman	MGA	Horizontal	345	SP: Sand
				Average :	**208**	
ML-4	152-152.5	Hazen	MGA	Horizontal	189	SP: Sand
ML-4	152-152.5	Krumbein-Monk	MGA	Horizontal	229	SP: Sand
ML-4	152-152.5	Kozeny-Carman	MGA	Horizontal	785	SP: Sand
				Average :	**401**	
ML-4	180-180.5	Hazen	MGA	Horizontal	89	SP: Sand
ML-4	180-180.5	Krumbein-Monk	MGA	Horizontal	63	SP: Sand
ML-4	180-180.5	Kozeny-Carman	MGA	Horizontal	296	SP: Sand
				Average :	**149**	
ML-6	94-94.5	Hazen	MGA	Horizontal	48	SP-SM: Sand with Silt
ML-6	94-94.5	Krumbein-Monk	MGA	Horizontal	49	SP-SM: Sand with Silt
ML-6	94-94.5	Kozeny-Carman	MGA	Horizontal	178	SP-SM: Sand with Silt
				Average :	**91**	
ML-6	104-104.5	Hazen	MGA	Horizontal	306	SW: Well-Graded Sand
ML-6	104-104.5	Krumbein-Monk	MGA	Horizontal	149	SW: Well-Graded Sand
ML-6	104-104.5	Kozeny-Carman	MGA	Horizontal	610	SW: Well-Graded Sand
				Average :	**355**	
ML-6	121-121.5	Hazen	MGA	Horizontal	37	SP: Sand

Table 1

Hydraulic Conductivity Calculations

Borehole	Interval [ft bgs]	Method	Sample Type	K Direction	Hydraulic Conductivity, K [ft/day]	Lithology
ML-6	121-121.5	Krumbein-Monk	MGA	Horizontal	28	SP: Sand
ML-6	121-121.5	Kozeny-Carman	MGA	Horizontal	83	SP: Sand
				Average :	**49**	
ML-6	141-141.5	Hazen	MGA	Horizontal	36	SP: Sand
ML-6	141-141.5	Krumbein-Monk	MGA	Horizontal	29	SP: Sand
ML-6	141-141.5	Kozeny-Carman	MGA	Horizontal	88	SP: Sand
				Average :	**51**	
ML-6	166-166.5	Hazen	MGA	Horizontal	43	SP: Sand
ML-6	166-166.5	Krumbein-Monk	MGA	Horizontal	38	SP: Sand
ML-6	166-166.5	Kozeny-Carman	MGA	Horizontal	106	SP: Sand
				Average :	**62**	
PR-1	56-57	Hazen	MGA	Horizontal	271	SP: Sand
PR-1	56-57	Krumbein-Monk	MGA	Horizontal	165	SP: Sand
PR-1	56-57	Kozeny-Carman	MGA	Horizontal	396	SP: Sand
				Average :	**277**	
PR-1	66-67	Hazen	MGA	Horizontal	328	SP: Sand with Gravel
PR-1	66-67	Krumbein-Monk	MGA	Horizontal	302	SP: Sand with Gravel
PR-1	66-67	Kozeny-Carman	MGA	Horizontal	561	SP: Sand with Gravel
				Average :	**397**	
PR-1	76-77	Hazen	MGA	Horizontal	311	SM: Silty Sand with Gravel
PR-1	76-77	Krumbein-Monk	MGA	Horizontal	836	SM: Silty Sand with Gravel
PR-1	76-77	Kozeny-Carman	MGA	Horizontal	1,150	SM: Silty Sand with Gravel
				Average :	**766**	
PR-1	110-111	Hazen	MGA	Horizontal	699	SW: Well-Graded Sand with Gravel
PR-1	110-111	Krumbein-Monk	MGA	Horizontal	703	SW: Well-Graded Sand with Gravel
PR-1	110-111	Kozeny-Carman	MGA	Horizontal	1,148	SW: Well-Graded Sand with Gravel
				Average :	**850**	
PR-1	124-125	Hazen	MGA	Horizontal	1,055	SW: Well-Graded Sand
PR-1	124-125	Krumbein-Monk	MGA	Horizontal	9,561	SW: Well-Graded Sand
PR-1	124-125	Kozeny-Carman	MGA	Horizontal	2,579	SW: Well-Graded Sand
				Average :	**4,398**	
PR-1	188-189	Hazen	MGA	Horizontal	160	SM: Silty Sand
PR-1	188-189	Krumbein-Monk	MGA	Horizontal	160	SM: Silty Sand
PR-1	188-189	Kozeny-Carman	MGA	Horizontal	429	SM: Silty Sand
				Average :	**249**	
PR-1	197-198	Hazen	MGA	Horizontal	170	SM: Silty Sand
PR-1	197-198	Krumbein-Monk	MGA	Horizontal	132	SM: Silty Sand
PR-1	197-198	Kozeny-Carman	MGA	Horizontal	413	SM: Silty Sand
				Average :	**238**	

Summary of Horizontal and Vertical Permeability Test

Borehole	Interval [ft bgs]	Method	Sample Type	K Direction	Permeability, K [ft/day]	Lithology
CX-B1	66.5-67	EPA9100	Core	Vertical	0.782	SM: Silty Sand
CX-B1	66.5-67	EPA9100	Core	Horizontal	4.337	SM: Silty Sand
CX-B1	166.5-167	EPA9100	Core	Vertical	1.380	SM: Silty Sand
CX-B1	166.5-167	EPA9100	Core	Horizontal	1.729	SM: Silty Sand
CX-B1	257.5-258	EPA9100	Core	Vertical	0.005	CL: Clay
CX-B2	207.5-208	EPA9100	Core	Vertical	10.657	SP: Sand
CX-B2	207.5-208	EPA9100	Core	Horizontal	3.997	SP: Sand
CX-B2	259-259.5	EPA9100	Core	Vertical	0.005	CL: Clay
CX-B3	107.5-108	EPA9100	Core	Vertical	14.909	SP: Sand with Gravel
CX-B3	107.5-108	EPA9100	Core	Horizontal	14.512	SP: Sand with Gravel
CX-B3	129-129.5	EPA9100	Core	Vertical	0.008	CH: Fat Clay
CX-B3	197.5-198	EPA9100	Core	Vertical	0.283	SP: Sand
CX-B3	197.5-198	EPA9100	Core	Horizontal	1.797	SP: Sand
ML-1	76-76.5	EPA9100	Core	Vertical	0.014	CH: Fat Clay
ML-1	107.5-108	EPA9100	Core	Vertical	24.149	SP-SM: Sand with Silt and Gravel
ML-1	107.5-108	EPA9100	Core	Horizontal	17.744	SP-SM: Sand with Silt and Gravel
ML-1	147-147.5	EPA9100	Core	Vertical	0.006	CL: Clay
ML-2	87-87.5	EPA9100	Core	Vertical	0.283	CL: Clay
ML-2	117.5-118	EPA9100	Core	Vertical	0.133	SP-SM: Sand with Silt
ML-2	117.5-118	EPA9100	Core	Horizontal	0.312	SP-SM: Sand with Silt
ML-2	157.5-158	EPA9100	Core	Vertical	0.312	SP: Sand
ML-2	157.5-158	EPA9100	Core	Horizontal	9.099	SP: Sand
ML-3	106.5-107	EPA9100	Core	Vertical	5.300	SP: Sand
ML-3	106.5-107	EPA9100	Core	Horizontal	2.387	SP: Sand
ML-3	166.5-167	EPA9100	Core	Vertical	0.027	ML: Silt

Table 2

Summary of Horizontal and Vertical Permeability Test

Borehole	Interval [ft bgs]	Method	Sample Type	K Direction	Permeability, K [ft/day]	Lithology
ML-3	166.5-167	EPA9100	Core	Horizontal	0.021	ML: Silt
ML-4	76.5-77	EPA9100	Core	Vertical	2.690	SP: Sand
ML-4	76.5-77	EPA9100	Core	Horizontal	2.460	SP: Sand
ML-4	126.5-127	EPA9100	Core	Vertical	0.003	CH: Fat Clay
ML-4	146.5-147	EPA9100	Core	Vertical	17.290	SP: Sand
ML-4	146.5-147	EPA9100	Core	Horizontal	36.564	SP: Sand
ML-6	79.5-80	EPA9100	Core	Vertical	0.007	CL: Clay
ML-6	107.5-108	EPA9100	Core	Vertical	13.180	SW: Well-Graded Sand with Gravel
ML-6	107.5-108	EPA9100	Core	Horizontal	11.338	SW: Well-Graded Sand with Gravel
ML-6	167.5-168	EPA9100	Core	Vertical	0.205	SM: Silty Sand
ML-6	167.5-168	EPA9100	Core	Horizontal	0.368	SM: Silty Sand
PR-1	67-67.5	EPA 9100	Core	Vertical	0.259	SP: Sand with Gravel
PR-1	67-67.5	EPA 9100	Core	Horizontal	0.171	SP: Sand with Gravel
PR-1	145.5-146	EPA 9100	Core	Vertical	0.006	CL: Clay
PR-1	152-152.5	EPA 9100	Core	Vertical	0.006	CL: Clay
PR-1	200.5-201	EPA 9100	Core	Vertical	14.456	Not Determined
PR-1	200.5-201	EPA 9100	Core	Horizontal	0.774	Not Determined

Table 2

Summary of Isolated Aquifer Zone Testing Field and Laboratory Water Quality Results - Moss Landing Area

Borehole:		PR-1		ML-1		ML-2		ML-3		ML-4		ML-6		MDW-1			
Zone #:		1	2	1	2	1	2	1	2	1	2	1	2	1	2	3	4
Screen Interval (ft bgs):		190 - 200	125 - 135	113.5 - 118.5	90 - 100	167 - 177	90 - 100	180 - 190	103 - 113	163.5 - 173.5	74.5 - 84.5	152 - 162	100 - 110	237 - 247	187 - 197	152 - 162	60 - 70
Sample Date:		24-Sep-13	25-Sep-13	5-Oct-13	7-Oct-13	17-Dec-13	19-Dec-13	11-Jan-14	13-Jan-14	5-Dec-13	6-Dec-13	22-Nov-13	23-Nov-13	1-May-14	7-May-14	8-May-14	10-May-14
Constituent[1]	**Units**	**Result**	**Result**	**Result**	**Result**	**Result**	**Result**	**Result**	**Result**	**Result**	**Result**	**Result**	**Result**	**Result**	**Result**	**Result**	**Result**
1,1,1,2-Tetrachloroethane	µg/L	ND	ND	ND	ND	ND	ND	ND	ND	ND	ND	ND	ND	ND	ND	ND	ND
1,1,1-Trichloroethane	µg/L	ND	ND	ND	ND	ND	ND	ND	ND	ND	ND	ND	ND	ND	ND	ND	ND
1,1,2,2-Tetrachloroethane	µg/L	ND	ND	ND	ND	ND	ND	ND	ND	ND	ND	ND	ND	ND	ND	ND	ND
1,1,2-Trichloro-1,2,2-trifluoroethane	µg/L	ND	ND	ND	ND	ND	ND	ND	ND	ND	ND	ND	ND	ND	ND	ND	ND
1,1,2-Trichloroethane	µg/L	ND	ND	ND	ND	ND	ND	ND	ND	ND	ND	ND	ND	ND	ND	ND	ND
1,1-Dichloroethane	µg/L	ND	ND	ND	ND	ND	ND	ND	ND	ND	ND	ND	ND	ND	ND	ND	ND
1,1-Dichloroethene	µg/L	ND	ND	ND	ND	ND	ND	ND	ND	ND	ND	ND	ND	ND	ND	ND	ND
1,1-Dichloropropene	µg/L	ND	ND	ND	ND	ND	ND	ND	ND	ND	ND	ND	ND	ND	ND	ND	ND
1,2,3-Trichlorobenzene	µg/L	ND	ND	ND	ND	ND	ND	ND	ND	ND	ND	ND	ND	ND	ND	ND	ND
1,2,3-Trichloropropane	µg/L	-	-	-	-	-	ND	ND	ND	-	ND	-	-	-	-	-	-
1,2,4-Trichlorobenzene	µg/L	ND	ND	ND	ND	ND	ND	ND	ND	ND	ND	ND	ND	ND	ND	ND	ND
1,2,4-Trimethylbenzene	µg/L	ND	ND	ND	ND	ND	ND	ND	ND	ND	ND	ND	ND	ND	ND	ND	ND
1,2-Dichlorobenzene	µg/L	ND	ND	ND	ND	ND	ND	ND	ND	ND	ND	ND	ND	ND	ND	ND	ND
1,2-Dichlorobenzene-d4	µg/L	4.6	4.8	4.7	4.8	4.6	7.81	9.69	10.1	4.8	8.06	4.6	4.8	5.3	4.9	5.0	5.1
1,2-Dichloroethane	µg/L	ND	ND	ND	ND	ND	ND	ND	ND	ND	ND	ND	ND	ND	ND	ND	ND
1,2-Dichloropropane	µg/L	ND	ND	ND	ND	ND	ND	ND	ND	ND	ND	ND	ND	ND	ND	ND	ND
1,3,5-Trimethylbenzene	µg/L	ND	ND	ND	ND	ND	ND	ND	ND	ND	ND	ND	ND	ND	ND	ND	ND
1,3-Dichlorobenzene	µg/L	ND	ND	ND	ND	ND	ND	ND	ND	ND	ND	ND	ND	ND	ND	ND	ND
1,3-Dichloropropane	µg/L	ND	ND	ND	ND	ND	ND	ND	ND	ND	ND	ND	ND	ND	ND	ND	ND
1,3-Dichloropropene, Total	µg/L	ND	ND	ND	ND	ND	ND	ND	ND	ND	ND	ND	ND	ND	ND	ND	ND
1,3-Dimethyl-2-nitrobenzene	µg/L	5.2	5.1	5.6	5.3	4.6	5.0	5.31	5.34	4.9	4.94	4.8	4.7	4.7	5.1	4.7	5.0
1,4-Dichlorobenzene	µg/L	ND	ND	ND	ND	ND	ND	ND	ND	ND	ND	ND	ND	ND	ND	ND	ND
1-Br-2-Nitrobenzene	µg/L	-	-	-	-	-	-	-	-	-	-	-	-	0.42	0.48	0.47	0.47
2,2-Dichloropropane	µg/L	ND	ND	ND	ND	ND	ND	ND	ND	ND	ND	ND	ND	ND	ND	ND	ND
2,4,5-T	µg/L	ND	ND	ND	ND	ND	ND	ND	ND	ND	ND	ND	ND	ND	ND	ND	ND
2,4,5-TP (Silvex)	µg/L	ND	ND	ND	ND	ND	ND	ND	ND	ND	ND	ND	ND	ND	ND	ND	ND
2,4-D	µg/L	ND	ND	ND	ND	ND	ND	ND	ND	ND	ND	ND	ND	ND	ND	ND	ND
2,4-DB	µg/L	-	-	-	-	-	-	ND	ND	-	ND	-	-	-	-	-	-
2,4-DCAA	µg/L	-	-	-	-	-	-	9.66	9.96	-	8.27	-	-	-	-	-	-
2-Butanone	µg/L	ND	ND	ND	ND	ND	ND	ND	ND	ND	ND	ND	ND	ND	ND	ND	ND
2-Chloroethyl vinyl ether	µg/L	-	-	-	-	-	ND	ND	ND	-	ND	-	-	-	-	-	-
2-Chlorotoluene	µg/L	ND	ND	ND	ND	ND	ND	ND	ND	ND	ND	ND	ND	ND	ND	ND	ND
2-Hexanone	µg/L	ND	ND	ND	ND	ND	ND	ND	ND	ND	ND	ND	ND	ND	ND	ND	ND
3,5-Dichlorobenzoic acid	µg/L	-	-	-	-	-	-	ND	ND	-	ND	-	-	-	-	-	-
3-Hydroxycarbofuran	µg/L	ND	ND	ND	ND	ND	ND	ND	ND	ND	ND	ND	ND	ND	ND	ND	ND
4,4´-DDD	µg/L	-	-	-	-	-	-	ND	ND	-	ND	-	-	ND	ND	ND	ND
4,4´-DDE	µg/L	-	-	-	-	-	-	ND	ND	-	ND	-	-	ND	ND	ND	ND
4,4´-DDT	µg/L	-	-	-	-	-	-	ND	ND	-	ND	-	-	ND	ND	ND	ND
4-Chlorotoluene	µg/L	ND	ND	ND	ND	ND	ND	ND	ND	ND	ND	ND	ND	ND	ND	ND	ND
4-Methyl-2-pentanone	µg/L	ND	ND	ND	ND	ND	ND	ND	ND	ND	ND	ND	ND	ND	ND	ND	ND
Acetone	µg/L	ND	ND	ND	ND	ND	-	-	-	ND	-	ND	ND	ND	ND	ND	ND
Acifluorfen	µg/L	-	-	-	-	-	-	ND	ND	-	ND	-	-	-	-	-	-
Alachlor	µg/L	ND	ND	ND	ND	ND	ND	ND	ND	ND	ND	ND	ND	ND	ND	ND	ND
Aldicarb	µg/L	ND	ND	ND	ND	ND	ND	ND	ND	ND	ND	ND	ND	ND	ND	ND	ND
Aldicarb Sulfone	µg/L	ND	ND	ND	ND	ND	ND	ND	ND	ND	ND	ND	ND	ND	ND	ND	ND
Aldicarb Sulfoxide	µg/L	ND	ND	ND	ND	ND	ND	ND	ND	ND	ND	ND	ND	ND	ND	ND	ND
Aldrin	µg/L	ND	ND	ND	ND	ND	ND	ND	ND	ND	ND	ND	ND	ND	ND	ND	ND
Alkalinity as CaCO3	mg/L	190	150	330	320	750	180	210	190	460	200	560	410	158	176	149	118
alpha-BHC	µg/L	-	-	-	-	-	-	ND	ND	-	ND	-	-	ND	ND	ND	ND
Aluminum	µg/L	ND	68	ND	150	82	ND	950	47	ND	17	52	ND	120	62	147	ND
Ammonia as N, Dissolved	mg/L	0.14	0.78	15	7.5	14	1.0	10	1.7	9.5	1.7	6.8	1.9	ND	3.22	3.40	ND
AMPA	µg/L	110	110	110	100	87	100	-	-	95	-	100	95	93	100	110	110
Aroclor 1016	µg/L	-	-	-	-	-	-	ND	ND	-	ND	-	-	ND	ND	ND	ND
Aroclor 1221	µg/L	-	-	-	-	-	-	ND	ND	-	ND	-	-	ND	ND	ND	ND
Aroclor 1232	µg/L	-	-	-	-	-	-	ND	ND	-	ND	-	-	ND	ND	ND	ND

Summary of Isolated Aquifer Zone Testing Field and Laboratory Water Quality Results - Moss Landing Area

Borehole:		PR-1		ML-1		ML-2		ML-3		ML-4		ML-6		MDW-1			
Zone #:		1	2	1	2	1	2	1	2	1	2	1	2	1	2	3	4
Screen Interval (ft bgs):		190 - 200	125 - 135	113.5 - 118.5	90 - 100	167 - 177	90 - 100	180 - 190	103 - 113	163.5 - 173.5	74.5 - 84.5	152 - 162	100 - 110	237 - 247	187 - 197	152 - 162	60 - 70
Sample Date:		24-Sep-13	25-Sep-13	5-Oct-13	7-Oct-13	17-Dec-13	19-Dec-13	11-Jan-14	13-Jan-14	5-Dec-13	6-Dec-13	22-Nov-13	23-Nov-13	1-May-14	7-May-14	8-May-14	10-May-14
Constituent[1]	**Units**	**Result**	**Result**	**Result**	**Result**	**Result**	**Result**	**Result**	**Result**	**Result**	**Result**	**Result**	**Result**	**Result**	**Result**	**Result**	**Result**
Aroclor 1242	µg/L	-	-	-	-	-	-	ND	ND	-	ND	-	-	ND	ND	ND	ND
Aroclor 1248	µg/L	-	-	-	-	-	-	ND	ND	-	ND	-	-	ND	ND	ND	ND
Aroclor 1254	µg/L	-	-	-	-	-	-	ND	ND	-	ND	-	-	ND	ND	ND	ND
Aroclor 1260	µg/L	-	-	-	-	-	-	ND	ND	-	ND	-	-	ND	ND	ND	ND
Arsenic, Total	µg/L	ND	13	3.4	ND	ND	ND	1.0	5.1	ND	0.71	4.5	4.3	39	54	44	40
Atrazine	µg/L	ND	ND	ND	ND	ND	ND	ND	ND	ND	ND	ND	ND	ND	ND	ND	ND
Barium, Dissolved	µg/L	110	ND	160	270	74	380	150	92	84	340	ND	89	94	93	134	ND
Bentazon	µg/L	ND	ND	ND	ND	ND	ND	ND	ND	ND	ND	ND	ND	ND	ND	ND	ND
Benzene	µg/L	ND	ND	ND	ND	ND	ND	ND	ND	ND	ND	ND	ND	ND	ND	ND	ND
Benzo(a)pyrene	µg/L	ND	ND	ND	ND	ND	ND	ND	ND	ND	ND	ND	ND	ND	ND	ND	ND
beta-BHC	µg/L	-	-	-	-	-	-	ND	ND	-	ND	-	-	ND	ND	ND	ND
Bicarbonate as CaCO3	mg/L	190	150	330	320	750	180	-	-	460	-	560	410	-	-	-	-
Bicarbonate as HCO3	mg/L	-	-	-	-	-	-	250	230	-	240	-	-	193	215	182	144
Bis(2-ethylhexyl) adipate (DEHA)	µg/L	ND	ND	ND	ND	ND	ND	ND	ND	ND	ND	ND	ND	ND	ND	ND	ND
Bis(2-ethylhexyl) phthalate (DEHP)	µg/L	ND	ND	ND	ND	ND	ND	4.0	ND	ND	ND	ND	ND	ND	ND	ND	ND
Boron, Dissolved	µg/L	ND	4300	2100	450	1700	400	500	450	1100	190	4000	3300	1570	3000	1680	2800
Bromacil	µg/L	ND	ND	ND	ND	ND	ND	ND	ND	ND	ND	ND	ND	ND	ND	ND	ND
Bromide, Dissolved	mg/L	0.80	65	43	5.7	45	14	13	7.7	43	16	68	59	54.0	52	40.0	32.4
Bromobenzene	µg/L	ND	ND	ND	ND	ND	ND	ND	ND	ND	ND	ND	ND	ND	ND	ND	ND
Bromochloromethane	µg/L	ND	ND	ND	ND	ND	ND	ND	ND	ND	ND	ND	ND	ND	ND	ND	ND
Bromodichloromethane	µg/L	ND	ND	ND	ND	ND	ND	ND	ND	ND	ND	ND	ND	ND	ND	ND	ND
Bromofluorobenzene	µg/L	4.9	5.0	5.0	4.9	51	7.70	8.54	9.13	51	9.69	52	53	50	51	52	53
Bromoform	µg/L	ND	ND	ND	ND	ND	ND	ND	ND	ND	ND	ND	ND	ND	ND	ND	ND
Bromomethane	µg/L	ND	ND	ND	ND	ND	ND	ND	ND	ND	ND	ND	ND	ND	ND	ND	ND
Butachlor	µg/L	ND	ND	ND	ND	ND	ND	ND	ND	ND	ND	ND	ND	ND	ND	ND	ND
Calcium, Dissolved	mg/L	50	400	590	180	620	460	391	254	850	730	570	600	1183	662	1012	264
Calcium, Total	mg/L	52	340	590	180	570	450	409	259	860	734	550	580	1211	676	973	257
Captan	µg/L	-	-	-	-	-	-	ND	ND	-	ND	-	-	-	-	-	-
Carbaryl	µg/L	ND	ND	ND	ND	ND	ND	ND	ND	ND	ND	ND	ND	ND	ND	ND	ND
Carbofuran	µg/L	ND	ND	ND	ND	ND	ND	ND	ND	ND	ND	ND	ND	ND	ND	ND	ND
Carbon Tetrachloride	µg/L	ND	ND	ND	ND	ND	ND	ND	ND	ND	ND	ND	ND	ND	ND	ND	ND
Carbonate as CaCO3	mg/L	ND	ND	ND	ND	ND	ND	ND	ND	ND	ND	ND	ND	ND	ND	ND	ND
Chlordane	µg/L	ND	ND	ND	ND	ND	ND	ND	ND	ND	ND	ND	ND	ND	ND	ND	ND
Chloride, Dissolved	mg/L	250	19000	12000	1600	12000	3900	-	-	10000	-	19000	16000	16100	16600	13300	11200
Chloride, Total	mg/L	-	-	-	-	-	-	3700	2300	-	4600	-	-	-	-	-	-
Chlorobenzene	µg/L	ND	ND	ND	ND	ND	ND	ND	ND	ND	ND	ND	ND	ND	ND	ND	ND
Chloroethane	µg/L	ND	ND	ND	ND	ND	ND	ND	ND	ND	ND	ND	ND	ND	ND	ND	ND
Chloroform	µg/L	ND	ND	ND	ND	ND	ND	ND	ND	ND	ND	ND	ND	ND	ND	ND	ND
Chloromethane	µg/L	ND	ND	ND	ND	ND	ND	ND	ND	ND	ND	ND	ND	ND	ND	ND	ND
Chloropropham	µg/L	-	-	-	-	-	-	ND	ND	-	ND	-	-	-	-	-	-
Chlorothalonil	µg/L	ND	ND	ND	ND	ND	ND	ND	ND	ND	ND	ND	ND	ND	ND	ND	ND
cis-1,2-Dichloroethene	µg/L	ND	ND	ND	ND	ND	ND	ND	ND	ND	ND	ND	ND	ND	ND	ND	ND
cis-1,3-Dichloropropene	µg/L	ND	ND	ND	ND	ND	ND	ND	ND	ND	ND	ND	ND	ND	ND	ND	ND
Color	CU	5.0	20	250	30	45	10	ND	ND	40	ND	20	10	23	50	25	15
Conductivity (Field)	µS/cm	1080	44440	29716	545	29650	9635	10507	6701	26437	11141	40389	35246	36237	38793	31014	26662
Copper, Total	µg/L	ND	54	37	ND	38	15	10	3.4	37	11	58	58	210	201	219	152
Cyanazine	µg/L	-	-	-	-	-	-	ND	ND	-	ND	-	-	-	-	-	-
Dalapon	µg/L	ND	ND	ND	ND	ND	ND	ND	ND	ND	ND	ND	ND	ND	ND	ND	ND
DCPA	µg/L	-	-	-	-	-	-	ND	ND	-	ND	-	-	-	-	-	-
DCPAA	µg/L	71	63	46	48	49	47	-	-	47	-	47	46	42	62	66	64
Decachlorobiphenyl	µg/L	-	-	-	-	-	-	0.0228	0.0295	-	0.0788	-	-	39%	0.0206	0.00734	0.0650
Delta Oxygen-18	$\delta^{18}O$ (‰)	-6.4	-0.5	-	-	-3.1	-5.3	-6.0	-6.4	-3.6	-5.2	-0.6	-1.3	-2.0	-1.0	-2.2	-2.5
delta-BHC	µg/L	-	-	-	-	-	-	ND	ND	-	ND	-	-	ND	ND	ND	ND
Delta-Deuterium	$\delta^{2}H$ (‰)	-42.0	-3.0	-	-	-19.2	-37.6	-40.1	-43.6	-24.5	-35.9	-5.5	-11.0	-13	-9	-16	-19
Diazinon	µg/L	ND	ND	ND	ND	ND	ND	ND	ND	ND	ND	ND	ND	ND	ND	ND	ND

Summary of Isolated Aquifer Zone Testing Field and Laboratory Water Quality Results - Moss Landing Area

Borehole:		PR-1		ML-1		ML-2		ML-3		ML-4		ML-6		MDW-1			
Zone #:		1	2	1	2	1	2	1	2	1	2	1	2	1	2	3	4
Screen Interval (ft bgs):		190 - 200	125 - 135	113.5 - 118.5	90 - 100	167 - 177	90 - 100	180 - 190	103 - 113	163.5 - 173.5	74.5 - 84.5	152 - 162	100 - 110	237 - 247	187 - 197	152 - 162	60 - 70
Sample Date:		24-Sep-13	25-Sep-13	5-Oct-13	7-Oct-13	17-Dec-13	19-Dec-13	11-Jan-14	13-Jan-14	5-Dec-13	6-Dec-13	22-Nov-13	23-Nov-13	1-May-14	7-May-14	8-May-14	10-May-14
Constituent[1]	**Units**	**Result**	**Result**	**Result**	**Result**	**Result**	**Result**	**Result**	**Result**	**Result**	**Result**	**Result**	**Result**	**Result**	**Result**	**Result**	**Result**
Dibromochloromethane	µg/L	ND	ND	ND	ND	ND	ND	ND	ND	ND	ND	ND	ND	ND	ND	ND	ND
Dibromochloropropane (DBCP)	µg/L	ND	ND	ND	ND	ND	ND	ND	ND	ND	ND	ND	ND	ND	ND	ND	ND
Dibromomethane	µg/L	ND	ND	ND	ND	ND	ND	ND	ND	ND	ND	ND	ND	ND	ND	ND	ND
Dicamba	µg/L	ND	ND	ND	ND	ND	ND	ND	ND	ND	ND	ND	ND	ND	ND	ND	ND
Dichloroacetate	mg/L	10.6	539	108	10.8	100	25.3	0.5	0.505	140	0.48	132	131	-	-	-	-
Dichlorodifluoromethane (Freon 12)	µg/L	ND	ND	ND	ND	ND	ND	ND	ND	ND	ND	ND	ND	ND	ND	ND	ND
Dichloromethane	µg/L	ND	ND	ND	ND	ND	ND	ND	ND	ND	ND	ND	ND	ND	ND	ND	ND
Dichloroprop	µg/L	-	-	-	-	-	-	ND	ND	-	ND	-	-	-	-	-	-
Dieldrin	µg/L	ND	ND	ND	ND	ND	ND	ND	ND	ND	ND	ND	ND	ND	ND	ND	ND
Di-isopropyl ether (DIPE)	µg/L	ND	ND	ND	ND	ND	ND	ND	ND	ND	ND	ND	ND	ND	ND	ND	ND
Dimethoate	µg/L	ND	ND	ND	ND	ND	ND	ND	ND	ND	ND	ND	ND	ND	ND	ND	ND
Dinoseb	µg/L	ND	ND	ND	ND	ND	ND	ND	ND	ND	ND	ND	ND	ND	ND	ND	ND
Dioxin (2,3,7,8 TCDD)	pg/L	ND	ND	ND	ND	ND	ND	ND	ND	ND	-	ND	ND	ND	ND	ND	ND
Diphenamid	µg/L	-	-	-	-	-	-	ND	ND	-	ND	-	-	-	-	-	-
Diquat	µg/L	ND	ND	ND	ND	ND	ND	ND	ND	ND	ND	ND	ND	ND	ND	ND	ND
Dissolved Oxygen (Field)	mg/L	N/A	N/A	N/A	N/A	0	0	3.7	0.1	0	0.1	0.1	0.1	0.2	0.2	0.1	2.5
Disulfoton	µg/L	-	-	-	-	-	-	ND	ND	-	ND	-	-	-	-	-	-
Endosulfan I	µg/L	-	-	-	-	-	-	ND	ND	-	ND	-	-	ND	ND	ND	ND
Endosulfan II	µg/L	-	-	-	-	-	-	ND	ND	-	ND	-	-	ND	ND	ND	ND
Endosulfan sulfate	µg/L	-	-	-	-	-	-	ND	ND	-	ND	-	-	ND	ND	ND	ND
Endothall	µg/L	ND	ND	ND	ND	ND	ND	ND	ND	ND	ND	ND	ND	ND	ND	ND	ND
Endrin	µg/L	ND	ND	ND	ND	ND	ND	ND	ND	ND	ND	ND	ND	ND	ND	ND	ND
Endrin aldehyde	µg/L	-	-	-	-	-	-	ND	ND	-	ND	-	-	ND	ND	ND	ND
EPTC	µg/L	-	-	-	-	-	-	ND	ND	-	ND	-	-	-	-	-	-
Ethyl tert-Butyl Ether (ETBE)	µg/L	ND	ND	ND	ND	ND	ND	ND	ND	ND	ND	ND	ND	ND	ND	ND	ND
Ethylbenzene	µg/L	ND	ND	ND	ND	ND	ND	ND	ND	ND	ND	ND	ND	ND	ND	ND	ND
Ethylene Dibromide (EDB)	µg/L	ND	ND	ND	ND	ND	ND	ND	ND	ND	ND	ND	ND	ND	ND	ND	ND
Fluoride, Dissolved	mg/L	0.10	ND	0.12	0.20	ND	ND	ND	ND	ND	ND	ND	ND	ND	ND	ND	0.6
gamma-BHC (Lindane)	µg/L	ND	ND	ND	ND	ND	ND	ND	ND	ND	ND	ND	ND	ND	ND	ND	ND
Glyphosate	µg/L	ND	ND	ND	ND	ND	ND	ND	ND	ND	ND	ND	ND	ND	ND	ND	ND
Hardness as CaCO3	mg/L	240	5300	4700	920	4800	2500	1020	647	6100	1830	6400	6000	8208	6658	6498	3887
Heptachlor	µg/L	ND	ND	ND	ND	ND	ND	ND	ND	ND	ND	ND	ND	ND	ND	ND	ND
Heptachlor Epoxide	µg/L	ND	ND	ND	ND	ND	ND	ND	ND	ND	ND	ND	ND	ND	ND	ND	ND
Hexachlorobenzene	µg/L	ND	ND	ND	ND	ND	ND	ND	ND	ND	ND	ND	ND	ND	ND	ND	ND
Hexachlorobutadiene	µg/L	ND	ND	ND	ND	ND	ND	ND	ND	ND	ND	ND	ND	ND	ND	ND	ND
Hexachlorocyclopentadiene	µg/L	ND	ND	ND	ND	ND	ND	ND	ND	ND	ND	ND	ND	ND	ND	ND	ND
Hydroxide as CaCO3	mg/L	ND	ND	ND	ND	ND	ND	ND	ND	ND	ND	ND	ND	ND	ND	ND	ND
Iodide, Dissolved	µg/L	64	ND	ND	180	920	360	100	200	640	51	620	380	ND	ND	ND	ND
Iron, Dissolved	µg/L	ND	ND	6000	ND	ND	140	ND	1700	ND	ND	ND	ND	365	13059	20051	ND
Iron, Total	µg/L	200	650	20000	1800	3000	500	6900	3500	1200	10000	3900	560	492	13532	26720	178
Isopropylbenzene	µg/L	ND	ND	ND	ND	ND	ND	ND	ND	ND	ND	ND	ND	ND	ND	ND	ND
Lithium	µg/L	27	150	140	34	270	78	110	86	240	91	390	330	226	153	120	142
m,p-Xylenes	µg/L	ND	ND	ND	ND	ND	ND	ND	ND	ND	ND	ND	ND	ND	ND	ND	ND
Magnesium, Dissolved	mg/L	27	1200	810	110	900	360	298	173	970	507	1200	1100	1211	1168	1020	796
Magnesium, Total	mg/L	28	1100	780	110	820	340	310	178	960	512	1200	1100	1259	1207	988	788
Manganese, Dissolved	µg/L	180	1700	5200	790	2600	710	1400	1300	6400	5000	3900	3600	1605	4694	6512	ND
Manganese, Total	µg/L	190	1500	5300	790	2400	680	1500	1400	6400	5100	3800	3500	1653	4817	6303	ND
Mass Balance, Total	meq/L	-	-	-	-	-	-	-	-	-	-	-	-	-	-	-	-
Mass Balance-Dissolved Anions	meq/L	12	580	380	51	390	120	-	-	320	-	590	500	504	520	416	351
Mass Balance-Dissolved Cations	meq/L	11	570	360	50	380	120	-	-	340	-	550	480	497	507	452	370
MBAS (Surfactants)	mg/L	ND	ND	ND	ND	ND	ND	ND	ND	ND	ND	ND	ND	ND	ND	ND	ND
Methiocarb	µg/L	-	-	-	-	-	-	ND	ND	-	ND	-	-	ND	ND	ND	ND
Methomyl	µg/L	ND	ND	ND	ND	ND	ND	ND	ND	ND	ND	ND	ND	ND	ND	ND	ND
Methoxychlor	µg/L	ND	ND	ND	ND	ND	ND	ND	ND	ND	ND	ND	ND	ND	ND	ND	ND
Methyl tert-butyl ether (MTBE)	µg/L	ND	ND	ND	ND	ND	ND	ND	ND	ND	ND	ND	ND	ND	ND	ND	ND

Summary of Isolated Aquifer Zone Testing Field and Laboratory Water Quality Results - Moss Landing Area

Borehole:		PR-1		ML-1		ML-2		ML-3		ML-4		ML-6		MDW-1			
Zone #:		1	2	1	2	1	2	1	2	1	2	1	2	1	2	3	4
Screen Interval (ft bgs):		190 - 200	125 - 135	113.5 - 118.5	90 - 100	167 - 177	90 - 100	180 - 190	103 - 113	163.5 - 173.5	74.5 - 84.5	152 - 162	100 - 110	237 - 247	187 - 197	152 - 162	60 - 70
Sample Date:		24-Sep-13	25-Sep-13	5-Oct-13	7-Oct-13	17-Dec-13	19-Dec-13	11-Jan-14	13-Jan-14	5-Dec-13	6-Dec-13	22-Nov-13	23-Nov-13	1-May-14	7-May-14	8-May-14	10-May-14
Constituent[1]	**Units**	**Result**	**Result**	**Result**	**Result**	**Result**	**Result**	**Result**	**Result**	**Result**	**Result**	**Result**	**Result**	**Result**	**Result**	**Result**	**Result**
Metolachlor	µg/L	ND	ND	ND	ND	ND	ND	ND	ND	ND	ND	ND	ND	ND	ND	ND	ND
Metribuzin	µg/L	ND	ND	ND	ND	ND	ND	ND	ND	ND	ND	ND	ND	ND	ND	ND	ND
Molinate	µg/L	ND	ND	ND	ND	ND	ND	ND	ND	ND	ND	ND	ND	ND	ND	ND	ND
Naphthalene	µg/L	ND	ND	ND	ND	ND	ND	ND	ND	ND	ND	ND	ND	ND	ND	ND	ND
n-Butylbenzene	µg/L	ND	ND	ND	ND	ND	ND	ND	ND	ND	ND	ND	ND	ND	ND	ND	ND
Nitrate as NO3	mg/L	ND	ND	ND	ND	ND	ND	ND	ND	ND	ND	ND	ND	ND	2	18	8
Nitrate+Nitrite as N	mg/L	-	-	-	-	-	-	ND	ND	-	ND	-	-	ND	0.5	4.2	1.8
Nitrite as NO2-N, Dissolved	mg/L	ND	ND	ND	ND	ND	ND	-	-	ND	-	ND	ND	ND	ND	ND	ND
n-Propylbenzene	µg/L	ND	ND	ND	ND	ND	ND	ND	ND	ND	ND	ND	ND	ND	ND	ND	ND
Odor	TON	2.0	10	20	50	1.0	1.0	4.0	2.0	1.0	1.0	ND	ND	2	4	1	1
Orthophosphate as P, Dissolved	mg/L	0.14	0.042	ND	0.16	0.20	0.079	0.0039	0.012	0.12	0.077	0.14	0.14	ND	0.08	ND	0.06
Oxamyl	µg/L	ND	ND	ND	ND	ND	ND	ND	ND	ND	ND	ND	ND	ND	ND	ND	ND
Oxidation-Reduction Potential (Field)	mV	-50.5	-110.8	N/A	N/A	-99.2	30.1	-105.8	-151.4	-13.8	-92.8	-90.5	60.6	2.33	-106.0	-131.8	-10.1
o-Xylene	µg/L	ND	ND	ND	ND	ND	ND	ND	ND	ND	ND	ND	ND	ND	ND	ND	ND
PCB Aroclor Screen	µg/L	ND	ND	ND	ND	ND	ND	-	-	ND	-	ND	ND	-	-	-	-
PCBs, Total	µg/L	-	-	-	-	-	-	ND	ND	-	ND	-	-	ND	ND	ND	ND
Pentachlorophenol	µg/L	ND	ND	ND	ND	ND	ND	ND	ND	ND	ND	ND	ND	ND	ND	ND	ND
Perylene-d12	µg/L	-	-	-	-	-	-	5.08	4.75	-	1.38	-	-	-	-	-	-
pH	pH Units	8.2	7.7	7.4	7.8	7.7	7.6	7.49	7.22	7.6	6.79	7.4	7.4	7.2	6.9	6.9	7.4
pH (Field)	pH Units	6.87	6.66	6.92	7.24	6.86	6.67	7.32	6.94	6.76	6.57	6.63	6.58	7.12	6.80	6.9	7.32
pH Temperature in °C	°C	21.7	21.9	21.6	21.3	20.1	19.9	-	-	21.9	-	21.4	21.0	-	-	-	-
Phosphorus, Dissolved	mg/L	0.11	ND	0.18	0.21	ND	ND	0.078	0.20	ND	0.047	ND	0.12	ND	0.08	ND	0.08
Picloram	µg/L	ND	ND	ND	ND	ND	ND	ND	ND	ND	ND	ND	ND	ND	ND	ND	ND
p-Isopropyltoluene	µg/L	ND	ND	ND	ND	ND	ND	ND	ND	ND	ND	ND	ND	ND	ND	ND	ND
Potassium, Dissolved	mg/L	6.0	380	92	31	130	34	58	27	98	36	250	270	36	158	81	246
Potassium, Total	mg/L	-	-	-	-	-	-	60	27	-	37	-	-	-	-	-	-
Prometon	µg/L	-	-	-	-	-	-	ND	ND	-	ND	-	-	-	-	-	-
Prometryn	µg/L	-	-	-	-	-	-	ND	ND	-	ND	-	-	ND	ND	ND	ND
Propachlor	µg/L	ND	ND	ND	ND	ND	ND	ND	ND	ND	ND	ND	ND	ND	ND	ND	ND
Propoxur (Baygon)	µg/L	-	-	-	-	-	-	ND	ND	-	ND	-	-	ND	ND	ND	ND
QC Ratio TDS/SEC		-	-	-	-	-	-	-	-	-	-	-	-	0.70	0.67	0.70	0.66
sec-Butylbenzene	µg/L	ND	ND	ND	ND	ND	ND	ND	ND	ND	ND	ND	ND	ND	ND	ND	ND
Silica as SiO2, Dissolved	mg/L	30	25	26	35	34	38	36	40	34	40	32	32	32	30	34	15
Simazine	µg/L	ND	ND	ND	ND	ND	ND	ND	ND	ND	ND	ND	ND	ND	ND	ND	ND
Sodium, Dissolved	mg/L	140	10000	6000	710	6200	1500	1600	1000	5000	1400	9400	8100	7758	8588	7254	6541
Sodium, Total	mg/L	-	-	-	-	-	-	1700	1000	-	1400	-	-	-	-	-	-
Specific Conductance (EC)	µmhos/cm	1200	43000	30000	4900	31000	11000	12000	7800	29000	13000	43000	38000	44180	45230	38100	32970
Specific Conductance (EC) (Field)	µS/cm	1296	53620	35169	647	34730	11508	11704	7439	30671	12933	48132	42650	42787	45875	37546	32173
Strontium, Dissolved	µg/L	400	7400	7100	1600	7900	4100	3100	1900	8600	5300	12000	10000	9880	8490	8936	4369
Styrene	µg/L	ND	ND	ND	ND	ND	ND	ND	ND	ND	ND	ND	ND	ND	ND	ND	ND
Sulfate as SO4, Dissolved	mg/L	24	2500	1400	21	1000	340	370	190	960	420	2000	1900	2208	2270	1790	1560
TCMX	µg/L	2.3	2.2	2.4	1.2	4.9	5.1	0.0783	0.104	3.5	0.0877	4.6	4.5	-	0.0961	0.0770	0.0796
Temperature (Field)	°C	16.3	15.4	16.9	16.8	17.3	16.4	19.7	19.8	17.8	17.7	16.5	15.9	17.0	16.8	15.9	16
Terbacil	µg/L	-	-	-	-	-	-	ND	ND	-	ND	-	-	-	-	-	-
tert-Amyl Methyl Ether (TAME)	µg/L	ND	ND	ND	ND	ND	ND	ND	ND	ND	ND	ND	ND	ND	ND	ND	ND
tert-Butyl alcohol (TBA)	µg/L	ND	ND	ND	ND	ND	-	-	-	ND	-	ND	ND	ND	ND	ND	ND
tert-Butylbenzene	µg/L	ND	ND	ND	ND	ND	ND	ND	ND	ND	ND	ND	ND	ND	ND	ND	ND
Tetrachloroethene (PCE)	µg/L	ND	ND	ND	ND	ND	ND	ND	ND	ND	ND	ND	ND	ND	ND	ND	ND
Tetrachloro-meta-xylene (TCMX)	%	150	146	165	79	111	115	78	104	80	92	103	103	87	101	81	84
Thiobencarb	µg/L	ND	ND	ND	ND	ND	ND	ND	ND	ND	ND	ND	ND	ND	ND	ND	ND
Toluene	µg/L	ND	ND	ND	ND	ND	ND	ND	ND	ND	ND	ND	ND	ND	ND	ND	ND
Total Anions	meq/L	-	-	-	-	-	-	120	73	-	140	-	-	-	-	-	-
Total Cations	meq/L	11	120	-	-	-	-	120	73	-	140	-	-	520	522	437	368
Total Dissolved Solids	mg/L	630	34000	22000	3200	19000	8100	7400	4200	21000	8600	34000	28000	31000	30200	26600	21900
Total Dissolved Solids (Field)	mg/L	845	34853	22847.5	422.5	23616.4	7826.8	7942.4	5059.2	20855.6	8799.2	31284.5	29002	29097.2	31198.4	25513.6	21875.1

Summary of Isolated Aquifer Zone Testing Field and Laboratory Water Quality Results - Moss Landing Area

Borehole:		PR-1		ML-1		ML-2		ML-3		ML-4		ML-6		MDW-1			
Zone #:		1	2	1	2	1	2	1	2	1	2	1	2	1	2	3	4
Screen Interval (ft bgs):		190 - 200	125 - 135	113.5 - 118.5	90 - 100	167 - 177	90 - 100	180 - 190	103 - 113	163.5 - 173.5	74.5 - 84.5	152 - 162	100 - 110	237 - 247	187 - 197	152 - 162	60 - 70
Sample Date:		24-Sep-13	25-Sep-13	5-Oct-13	7-Oct-13	17-Dec-13	19-Dec-13	11-Jan-14	13-Jan-14	5-Dec-13	6-Dec-13	22-Nov-13	23-Nov-13	1-May-14	7-May-14	8-May-14	10-May-14
Constituent[1]	**Units**	**Result**	**Result**	**Result**	**Result**	**Result**	**Result**	**Result**	**Result**	**Result**	**Result**	**Result**	**Result**	**Result**	**Result**	**Result**	**Result**
Total Kjehldahl Nitrogen, Dissolved	mg/L	ND	ND	16	8.1	14	1.5	9.7	1.6	11	0.15	7.3	2.3	ND	3.3	3.6	ND
Total Oxidizable Nitrogen, as N	mg/L	ND	ND	ND	ND	ND	ND	-	-	ND	-	ND	ND	-	-	-	-
Total Trihalomethanes	µg/L	ND	ND	ND	ND	ND	ND	ND	ND	ND	ND	ND	ND	ND	ND	ND	ND
Toxaphene	µg/L	ND	ND	ND	ND	ND	ND	ND	ND	ND	ND	ND	ND	ND	ND	ND	ND
trans-1,2-Dichloroethene	µg/L	ND	ND	ND	ND	ND	ND	ND	ND	ND	ND	ND	ND	ND	ND	ND	ND
trans-1,3-Dichloropropene	µg/L	ND	ND	ND	ND	ND	ND	ND	ND	ND	ND	ND	ND	ND	ND	ND	ND
Trichloroethene (TCE)	µg/L	ND	ND	ND	ND	ND	ND	ND	ND	ND	ND	ND	ND	ND	ND	ND	ND
Trichlorofluoromethane	µg/L	ND	ND	ND	ND	ND	ND	ND	ND	ND	ND	ND	ND	ND	ND	ND	ND
Trifluralin	µg/L	ND	ND	ND	ND	ND	ND	ND	ND	ND	ND	ND	ND	ND	ND	ND	ND
Triphenyl phosphate	µg/L	-	-	-	-	-	-	6.30	6.10	-	5.24	-	-	-	-	-	-
Trithion	µg/L	-	-	-	-	-	-	ND	ND	-	ND	-	-	-	-	-	-
Tritium	pCi/L	-68.2 ± 108 (199)	38.7 ± 122 (212)	47.5 ± 127 (220)	-17.9 ± 117 (210)	-4.86±115 (204)	32.8±122 (212)	-2.52 ± 125 (221)	58.9 ± 121 (207)	-118±123 (231)	-110±130 (240)	10.3±129 (226)	-15.7±129 (230)	-	-	-	-
Tritium, prec. est.[2]	TU	-	-	pending	pending	pending	pending	pending	pending	pending	pending	pending	pending	pending	pending	pending	pending
Turbidity	NTU	0.67	5.1	150	19	6.0	2.7	160	11	6.6	2.8	6.5	1.6	0.85	9.7	150	0.60
Turbidity (Field)	NTU	0.89	1.56	0.7	2.52	1.68	0.72	65.2	0.99	0.48	0.94	1.26	1.73	2.33	0.64	0.84	0.83
Vinyl Chloride	µg/L	ND	ND	ND	ND	ND	ND	ND	ND	ND	ND	ND	ND	ND	ND	ND	ND
Xylenes, Total	µg/L	ND	ND	ND	ND	ND	ND	ND	ND	ND	ND	ND	ND	ND	ND	ND	ND
Zinc, Total	µg/L	ND	ND	ND	ND	ND	ND	240	31	ND	29	ND	ND	ND	ND	ND	ND

Notes:

°C = Degrees Celsius
CU = Color Units
$\delta^{18}O$ (‰) = Delta Oxygen-18
$\delta^{2}H$ (‰) = Delta-Deuterium
meq/L = Milliequivalents per Liter
mg/L = Milligrams per Liter
mV = Millivolts
NTU = Nephelometric Turbidity Units
pCi/L = Pico Curies per Liter
pg/L = Picograms per Liter
TON = Threshold Odor Number
TU = Tritium Units
µg/L = Micorgrams per Liter
µmhos/cm = Micromhos per Centimeter
µS/cm = MicroSiemens per Centimeter

ND = NOT DETECTED at or above the Reporting Limit or Practical Quantitation Limit. If J-value reported, then NOT DETECTED at or above the Method Detection Limit (MDL)

[1] See laboratory water quality reports in Appendix G for method numbers, dilution factors, Method Detection Limits, and Reporting Limits.
[2] Laboratory water quality results pending.

Table 3B

Summary of Isolated Aquifer Zone Testing Field and Laboratory Water Quality Results - CEMEX - Marina, CA

Borehole:		CX-B1WQ						CX-B2WQ				CX-B4				
Zone #:		1	2	3	4	5	6	1	2	3	4	1	2	3	4	5
Screen Interval (ft bgs):		274 - 284	237 - 247	182 - 192	134 - 144	84 - 94	51 - 61	215 - 225	161 - 171	104 - 114	55 - 65	306 - 316	248 - 258	155 - 165	110 - 120	58 - 68
Sample Date:		18-Feb-14	19-Feb-14	21-Feb-14	22-Feb-14	23-Feb-14	25-Feb-14	8-Mar-14	10-Mar-14	11-Mar-14	12-Mar-14	5-Apr-14	6-Apr-14	8-Apr-14	9-Apr-14	10-Apr-14
Constituent[1]	**Units**	**Result**	**Result**	**Result**	**Result**	**Result**	**Result**	**Result**	**Result**	**Result**	**Result**	**Result**	**Result**	**Result**	**Result**	**Result**
1,1,1,2-Tetrachloroethane	µg/L	ND	ND	ND	ND	ND	ND	ND	ND	ND	ND	ND	ND	ND	ND	ND
1,1,1-Trichloroethane	µg/L	ND	ND	ND	ND	ND	ND	ND	ND	ND	ND	ND	ND	ND	ND	ND
1,1,2,2-Tetrachloroethane	µg/L	ND	ND	ND	ND	ND	ND	ND	ND	ND	ND	ND	ND	ND	ND	ND
1,1,2-Trichloro-1,2,2-trifluoroethane	µg/L	ND	ND	ND	ND	ND	ND	ND	ND	ND	ND	ND	ND	ND	ND	ND
1,1,2-Trichloroethane	µg/L	ND	ND	ND	ND	ND	ND	ND	ND	ND	ND	ND	ND	ND	ND	ND
1,1-Dichloroethane	µg/L	ND	ND	ND	ND	ND	ND	ND	ND	ND	ND	ND	ND	ND	ND	ND
1,1-Dichloroethene	µg/L	ND	ND	ND	ND	ND	ND	ND	ND	ND	ND	ND	ND	ND	ND	ND
1,1-Dichloropropene	µg/L	ND	ND	ND	ND	ND	ND	ND	ND	ND	ND	ND	ND	ND	ND	ND
1,2,3-Trichlorobenzene	µg/L	ND	ND	ND	ND	ND	ND	ND	ND	ND	ND	ND	ND	ND	ND	ND
1,2,3-Trichloropropane	µg/L	-	-	-	-	-	-	-	-	-	-	-	-	-	-	-
1,2,4-Trichlorobenzene	µg/L	ND	ND	ND	ND	ND	ND	ND	ND	ND	ND	ND	ND	ND	ND	ND
1,2,4-Trimethylbenzene	µg/L	ND	ND	ND	ND	ND	ND	ND	ND	ND	ND	ND	ND	ND	ND	ND
1,2-Dichlorobenzene	µg/L	ND	ND	ND	ND	ND	ND	ND	ND	ND	ND	ND	ND	ND	ND	ND
1,2-Dichlorobenzene-d4	µg/L	5.0	4.8	4.9	5.0	4.8	4.8	5.0	4.9	4.8	4.6	4.9	4.7	4.8	5.2	5.0
1,2-Dichloroethane	µg/L	ND	ND	ND	ND	ND	ND	ND	ND	ND	ND	ND	ND	ND	ND	ND
1,2-Dichloropropane	µg/L	ND	ND	ND	ND	ND	ND	ND	ND	ND	ND	ND	ND	ND	ND	ND
1,3,5-Trimethylbenzene	µg/L	ND	ND	ND	ND	ND	ND	ND	ND	ND	ND	ND	ND	ND	ND	ND
1,3-Dichlorobenzene	µg/L	ND	ND	ND	ND	ND	ND	ND	ND	ND	ND	ND	ND	ND	ND	ND
1,3-Dichloropropane	µg/L	ND	ND	ND	ND	ND	ND	ND	ND	ND	ND	ND	ND	ND	ND	ND
1,3-Dichloropropene, Total	µg/L	ND	ND	ND	ND	ND	ND	ND	ND	ND	ND	ND	ND	ND	ND	ND
1,3-Dimethyl-2-nitrobenzene	µg/L	5.0	5.3	5.6	5.1	5.5	5.4	5.0	4.8	5.2	5.0	5.4	5.2	4.1	4.3	5.0
1,4-Dichlorobenzene	µg/L	ND	ND	ND	ND	ND	ND	ND	ND	ND	ND	ND	ND	ND	ND	ND
1-Br-2-Nitrobenzene	µg/L	-	3.7	3.8	3.7	3.9	2.2	2.4	2.3	0.60	0.64	0.49	0.49	0.44	0.42	0.43
2,2-Dichloropropane	µg/L	ND	ND	ND	ND	ND	ND	ND	ND	ND	ND	ND	ND	ND	ND	ND
2,4,5-T	µg/L	ND	ND	ND	ND	ND	ND	ND	ND	ND	ND	ND	ND	ND	ND	ND
2,4,5-TP (Silvex)	µg/L	ND	ND	ND	ND	ND	ND	ND	ND	ND	ND	ND	ND	ND	ND	ND
2,4-D	µg/L	ND	ND	ND	ND	ND	ND	ND	ND	ND	ND	ND	ND	ND	ND	ND
2,4-DB	µg/L	-	-	-	-	-	-	-	-	-	-	-	-	-	-	-
2,4-DCAA	µg/L	-	-	-	-	-	-	-	-	-	-	-	-	-	-	-
2-Butanone	µg/L	ND	ND	ND	ND	ND	ND	ND	ND	ND	ND	ND	ND	ND	ND	ND
2-Chloroethyl vinyl ether	µg/L	-	-	-	-	-	-	-	-	-	-	-	-	-	-	-
2-Chlorotoluene	µg/L	ND	ND	ND	ND	ND	ND	ND	ND	ND	ND	ND	ND	ND	ND	ND
2-Hexanone	µg/L	ND	ND	ND	ND	ND	ND	ND	ND	ND	ND	ND	ND	ND	ND	ND
3,5-Dichlorobenzoic acid	µg/L	-	-	-	-	-	-	-	-	-	-	-	-	-	-	-
3-Hydroxycarbofuran	µg/L	ND	ND	ND	ND	ND	ND	ND	ND	ND	ND	ND	ND	ND	ND	ND
4,4´-DDD	µg/L	ND	ND	ND	ND	ND	ND	ND	ND	ND	ND	ND	ND	ND	ND	ND
4,4´-DDE	µg/L	ND	ND	ND	ND	ND	ND	ND	ND	ND	ND	ND	ND	ND	ND	ND
4,4´-DDT	µg/L	ND	ND	ND	ND	ND	ND	ND	ND	ND	ND	ND	ND	ND	ND	ND
4-Chlorotoluene	µg/L	ND	ND	ND	ND	ND	ND	ND	ND	ND	ND	ND	ND	ND	ND	ND
4-Methyl-2-pentanone	µg/L	ND	ND	ND	ND	ND	ND	ND	ND	ND	ND	ND	ND	ND	ND	ND
Acetone	µg/L	ND	ND	ND	ND	ND	ND	ND	ND	ND	ND	ND	ND	ND	ND	ND
Acifluorfen	µg/L	-	-	-	-	-	-	-	-	-	-	-	-	-	-	-
Alachlor	µg/L	ND	ND	ND	ND	ND	ND	ND	ND	ND	ND	ND	ND	ND	ND	ND
Aldicarb	µg/L	ND	ND	ND	ND	ND	ND	ND	ND	ND	ND	ND	ND	ND	ND	ND
Aldicarb Sulfone	µg/L	ND	ND	ND	ND	ND	ND	ND	ND	ND	ND	ND	ND	ND	ND	ND
Aldicarb Sulfoxide	µg/L	ND	ND	ND	ND	ND	ND	ND	ND	ND	ND	ND	ND	ND	ND	ND

Table 3B

Summary of Isolated Aquifer Zone Testing Field and Laboratory Water Quality Results - CEMEX - Marina, CA

Borehole:		CX-B1WQ						CX-B2WQ				CX-B4				
Zone #:		1	2	3	4	5	6	1	2	3	4	1	2	3	4	5
Screen Interval (ft bgs):		274 - 284	237 - 247	182 - 192	134 - 144	84 - 94	51 - 61	215 - 225	161 - 171	104 - 114	55 - 65	306 - 316	248 - 258	155 - 165	110 - 120	58 - 68
Sample Date:		18-Feb-14	19-Feb-14	21-Feb-14	22-Feb-14	23-Feb-14	25-Feb-14	8-Mar-14	10-Mar-14	11-Mar-14	12-Mar-14	5-Apr-14	6-Apr-14	8-Apr-14	9-Apr-14	10-Apr-14
Constituent[1]	**Units**	**Result**	**Result**	**Result**	**Result**	**Result**	**Result**	**Result**	**Result**	**Result**	**Result**	**Result**	**Result**	**Result**	**Result**	**Result**
Aldrin	µg/L	ND	ND	ND	ND	ND	ND	ND	ND	ND	ND	ND	ND	ND	ND	ND
Alkalinity as CaCO3	mg/L	118	132	167	96	126	103	147	129	102	104	112	118	103	98	62
alpha-BHC	µg/L	ND	ND	ND	ND	ND	ND	ND	ND	ND	ND	ND	ND	ND	ND	ND
Aluminum	µg/L	77	ND	ND	ND	ND	ND	84	74	156	204	ND	ND	ND	31	20
Ammonia as N, Dissolved	mg/L	ND	ND	ND	ND	ND	ND	ND	ND	ND	0.1	ND	ND	ND	ND	ND
AMPA	µg/L	110	100	110	98	89	110	120	98	100	76	98	110	110	96	110
Aroclor 1016	µg/L	ND	ND	ND	ND	ND	ND	ND	ND	ND	ND	ND	ND	ND	ND	ND
Aroclor 1221	µg/L	ND	ND	ND	ND	ND	ND	ND	ND	ND	ND	ND	ND	ND	ND	ND
Aroclor 1232	µg/L	ND	ND	ND	ND	ND	ND	ND	ND	ND	ND	ND	ND	ND	ND	ND
Aroclor 1242	µg/L	ND	ND	ND	ND	ND	ND	ND	ND	ND	ND	ND	ND	ND	ND	ND
Aroclor 1248	µg/L	ND	ND	ND	ND	ND	ND	ND	ND	ND	ND	ND	ND	ND	ND	ND
Aroclor 1254	µg/L	ND	ND	ND	ND	ND	ND	ND	ND	ND	ND	ND	ND	ND	ND	ND
Aroclor 1260	µg/L	ND	ND	ND	ND	ND	ND	ND	ND	ND	ND	ND	ND	ND	ND	ND
Arsenic, Total	µg/L	38	ND	ND	ND	ND	ND	46	28	59	55	33	32	27	26	5
Atrazine	µg/L	ND	ND	ND	ND	ND	ND	ND	ND	ND	ND	ND	ND	ND	ND	ND
Barium, Dissolved	µg/L	138	210	ND	120	ND	100	109	346	85	90	174	123	84	179	222
Bentazon	µg/L	ND	ND	ND	ND	ND	ND	ND	ND	ND	ND	ND	ND	ND	ND	ND
Benzene	µg/L	ND	ND	ND	ND	ND	ND	ND	ND	ND	ND	ND	ND	ND	ND	ND
Benzo(a)pyrene	µg/L	ND	ND	ND	ND	ND	ND	ND	ND	ND	ND	ND	ND	ND	ND	ND
beta-BHC	µg/L	ND	ND	ND	ND	ND	ND	ND	ND	ND	ND	ND	ND	ND	ND	ND
Bicarbonate as CaCO3	mg/L	-	-	-	-	-	-	-	-	-	-	-	-	-	-	-
Bicarbonate as HCO3	mg/L	144	161	204	117	154	126	179	157	124	127	137	144	126	120	76
Bis(2-ethylhexyl) adipate (DEHA)	µg/L	ND	ND	ND	ND	ND	ND	ND	ND	ND	ND	ND	ND	ND	ND	ND
Bis(2-ethylhexyl) phthalate (DEHP)	µg/L	ND	ND	ND	ND	ND	ND	ND	ND	ND	ND	ND	ND	ND	ND	ND
Boron, Dissolved	µg/L	700	730	1540	2880	2800	2400	1540	860	2580	2360	600	1840	1400	1310	260
Bromacil	µg/L	ND	ND	ND	ND	ND	ND	ND	ND	ND	ND	ND	ND	ND	ND	ND
Bromide, Dissolved	mg/L	41	24	49.6	38	41	38	38	23	45	44	43	39	29	31	6.1
Bromobenzene	µg/L	ND	ND	ND	ND	ND	ND	ND	ND	ND	ND	ND	ND	ND	ND	ND
Bromochloromethane	µg/L	ND	ND	ND	ND	ND	ND	ND	ND	ND	ND	ND	ND	ND	ND	ND
Bromodichloromethane	µg/L	ND	ND	ND	ND	ND	ND	ND	ND	ND	ND	ND	ND	ND	ND	ND
Bromofluorobenzene	µg/L	52	50	51	52	50	48	51	51	51	48	50	49	49	52	51
Bromoform	µg/L	ND	ND	ND	ND	ND	ND	ND	ND	ND	ND	ND	ND	ND	ND	ND
Bromomethane	µg/L	ND	ND	ND	ND	ND	ND	ND	ND	ND	ND	ND	ND	ND	ND	ND
Butachlor	µg/L	ND	ND	ND	ND	ND	ND	ND	ND	ND	ND	ND	ND	ND	ND	ND
Calcium, Dissolved	mg/L	2718	1558	2018	502	656	709	1948	1141	732	886	3158	1557	911	1164	277
Calcium, Total	mg/L	2718	1581	2090	505	674	710	1961	1181	712	896	3125	1516	938	1081	261
Captan	µg/L	-	-	-	-	-	-	-	-	-	-	-	-	-	-	-
Carbaryl	µg/L	ND	ND	ND	ND	ND	ND	ND	ND	ND	ND	ND	ND	ND	ND	ND
Carbofuran	µg/L	ND	ND	ND	ND	ND	ND	ND	ND	ND	ND	ND	ND	ND	ND	ND
Carbon Tetrachloride	µg/L	ND	ND	ND	ND	ND	ND	ND	ND	ND	ND	ND	ND	ND	ND	ND
Carbonate as CaCO3	mg/L	ND	ND	ND	ND	ND	ND	ND	ND	ND	ND	ND	ND	ND	ND	ND
Chlordane	µg/L	ND	ND	ND	ND	ND	ND	ND	ND	ND	ND	ND	ND	ND	ND	ND
Chloride, Dissolved	mg/L	14184	8796	17995	14050	14755	13675	13026	7408	14099	14464	14013	13566	10128	11044	2045
Chloride, Total	mg/L	-	-	-	-	-	-	-	-	-	-	-	-	-	-	-
Chlorobenzene	µg/L	ND	ND	ND	ND	ND	ND	ND	ND	ND	ND	ND	ND	ND	ND	ND
Chloroethane	µg/L	ND	ND	ND	ND	ND	ND	ND	ND	ND	ND	ND	ND	ND	ND	ND

Summary of Isolated Aquifer Zone Testing Field and Laboratory Water Quality Results - CEMEX - Marina, CA

Borehole:		CX-B1WQ						CX-B2WQ				CX-B4				
Zone #:		1	2	3	4	5	6	1	2	3	4	1	2	3	4	5
Screen Interval (ft bgs):		274 - 284	237 - 247	182 - 192	134 - 144	84 - 94	51 - 61	215 - 225	161 - 171	104 - 114	55 - 65	306 - 316	248 - 258	155 - 165	110 - 120	58 - 68
Sample Date:		18-Feb-14	19-Feb-14	21-Feb-14	22-Feb-14	23-Feb-14	25-Feb-14	8-Mar-14	10-Mar-14	11-Mar-14	12-Mar-14	5-Apr-14	6-Apr-14	8-Apr-14	9-Apr-14	10-Apr-14
Constituent[1]	**Units**	**Result**	**Result**	**Result**	**Result**	**Result**	**Result**	**Result**	**Result**	**Result**	**Result**	**Result**	**Result**	**Result**	**Result**	**Result**
Chloroform	µg/L	ND	ND	ND	ND	ND	ND	ND	ND	ND	ND	ND	ND	ND	ND	ND
Chloromethane	µg/L	ND	ND	ND	ND	ND	ND	ND	ND	ND	ND	ND	ND	ND	ND	ND
Chloropropham	µg/L	-	-	-	-	-	-	-	-	-	-	-	-	-	-	-
Chlorothalonil	µg/L	ND	ND	ND	ND	ND	ND	ND	ND	ND	ND	ND	ND	ND	ND	ND
cis-1,2-Dichloroethene	µg/L	ND	ND	ND	ND	ND	ND	ND	ND	ND	ND	ND	ND	ND	ND	ND
cis-1,3-Dichloropropene	µg/L	ND	ND	ND	ND	ND	ND	ND	ND	ND	ND	ND	ND	ND	ND	ND
Color	CU	7	14	ND	10	5	4	21	7	ND	23	23	4	9	16	14
Conductivity (Field)	µS/cm	32361	20869	41546	34907	35167	30803	31029	18875	34532	34162	34754	34291	25663	26466	6208
Copper, Total	µg/L	15	ND	ND	ND	ND	ND	ND	ND	150	136	107	140	111	90	18
Cyanazine	µg/L	-	-	-	-	-	-	-	-	-	-	-	-	-	-	-
Dalapon	µg/L	ND	ND	ND	ND	ND	ND	ND	ND	ND	ND	ND	ND	ND	ND	ND
DCPA	µg/L	-	-	-	-	-	-	-	-	-	-	-	-	-	-	-
DCPAA	µg/L	48	51	42	43	45	41	45	56	47	47	53	55	56	59	58
Decachlorobiphenyl	µg/L	0.00769	0.0667	0.0149	0.0690	0.0727	71%	0.0277	0.0308	0.0727	0.0680	0.0205	0.0504	0.0417	0.0364	0.0585
Delta Oxygen-18	$\delta^{18}O$ (‰)	-2.6	-4.3	-0.8	-2.0	-1.6	-2.1	-2.3	-3.7	-1.8	-1.4	-3.0	-2.8	-4.3	-4.0	-5.9
delta-BHC	µg/L	ND	ND	ND	ND	ND	ND	ND	ND	ND	ND	ND	ND	ND	ND	ND
Delta-Deuterium	$\delta^{2}H$ (‰)	-18.4	-29.1	-6.2	-14.0	-12.0	-15.1	-18.0	-29.2	-13.3	-12.6	-19	-17	-28	-26	-40
Diazinon	µg/L	ND	ND	ND	ND	ND	ND	ND	ND	ND	ND	ND	ND	ND	ND	ND
Dibromochloromethane	µg/L	ND	ND	ND	ND	ND	ND	ND	ND	ND	ND	ND	ND	ND	ND	ND
Dibromochloropropane (DBCP)	µg/L	ND	ND	ND	ND	ND	ND	ND	ND	ND	ND	ND	ND	ND	ND	ND
Dibromomethane	µg/L	ND	ND	ND	ND	ND	ND	ND	ND	ND	ND	ND	ND	ND	ND	ND
Dicamba	µg/L	ND	ND	ND	ND	ND	ND	ND	ND	ND	ND	ND	ND	ND	ND	ND
Dichloroacetate	mg/L	-	-	-	-	-	-	-	-	-	-	-	-	-	-	-
Dichlorodifluoromethane (Freon 12)	µg/L	ND	ND	ND	ND	ND	ND	ND	ND	ND	ND	ND	ND	ND	ND	ND
Dichloromethane	µg/L	ND	ND	ND	ND	ND	ND	ND	ND	ND	ND	ND	ND	ND	ND	ND
Dichloroprop	µg/L	-	-	-	-	-	-	-	-	-	-	-	-	-	-	-
Dieldrin	µg/L	ND	ND	ND	ND	ND	ND	ND	ND	ND	ND	ND	ND	ND	ND	ND
Di-isopropyl ether (DIPE)	µg/L	ND	ND	ND	ND	ND	ND	ND	ND	ND	ND	ND	ND	ND	ND	ND
Dimethoate	µg/L	ND	ND	ND	ND	ND	ND	ND	ND	ND	ND	ND	ND	ND	ND	ND
Dinoseb	µg/L	ND	ND	ND	ND	ND	ND	ND	ND	ND	ND	ND	ND	ND	ND	ND
Dioxin (2,3,7,8 TCDD)	pg/L	ND	ND	ND	ND	ND	ND	ND	ND	ND	ND	ND	ND	ND	ND	ND
Diphenamid	µg/L	-	-	-	-	-	-	-	-	-	-	-	-	-	-	-
Diquat	µg/L	ND	ND	ND	ND	ND	ND	ND	ND	ND	ND	ND	ND	ND	ND	ND
Dissolved Oxygen (Field)	mg/L	1	1	0.1	3.6	3.6	3.5	0.9	1.4	5.7	4.7	0.6	2.5	4.5	5.1	28.3
Disulfoton	µg/L	-	-	-	-	-	-	-	-	-	-	-	-	-	-	-
Endosulfan I	µg/L	ND	ND	ND	ND	ND	ND	ND	ND	ND	ND	ND	ND	ND	ND	ND
Endosulfan II	µg/L	ND	ND	ND	ND	ND	ND	ND	ND	ND	ND	ND	ND	ND	ND	ND
Endosulfan sulfate	µg/L	ND	ND	ND	ND	ND	ND	ND	ND	ND	ND	ND	ND	ND	ND	ND
Endothall	µg/L	ND	ND	ND	ND	ND	ND	ND	ND	ND	ND	ND	ND	ND	ND	ND
Endrin	µg/L	ND	ND	ND	ND	ND	ND	ND	ND	ND	ND	ND	ND	ND	ND	ND
Endrin aldehyde	µg/L	ND	ND	ND	ND	ND	ND	ND	ND	ND	ND	ND	ND	ND	ND	ND
EPTC	µg/L	-	-	-	-	-	-	-	-	-	-	-	-	-	-	-
Ethyl tert-Butyl Ether (ETBE)	µg/L	ND	ND	ND	ND	ND	ND	ND	ND	ND	ND	ND	ND	ND	ND	ND
Ethylbenzene	µg/L	ND	ND	ND	ND	ND	ND	ND	ND	ND	ND	ND	ND	ND	ND	ND
Ethylene Dibromide (EDB)	µg/L	ND	ND	ND	ND	ND	ND	ND	ND	ND	ND	ND	ND	ND	ND	ND
Fluoride, Dissolved	mg/L	0.2	0.1	ND	ND	0.4	0.3	ND	0.2	0.5	0.5	ND	ND	ND	ND	0.2

Table 3B

Summary of Isolated Aquifer Zone Testing Field and Laboratory Water Quality Results - CEMEX - Marina, CA

Borehole:		CX-B1WQ						CX-B2WQ				CX-B4				
Zone #:		1	2	3	4	5	6	1	2	3	4	1	2	3	4	5
Screen Interval (ft bgs):		274 - 284	237 - 247	182 - 192	134 - 144	84 - 94	51 - 61	215 - 225	161 - 171	104 - 114	55 - 65	306 - 316	248 - 258	155 - 165	110 - 120	58 - 68
Sample Date:		18-Feb-14	19-Feb-14	21-Feb-14	22-Feb-14	23-Feb-14	25-Feb-14	8-Mar-14	10-Mar-14	11-Mar-14	12-Mar-14	5-Apr-14	6-Apr-14	8-Apr-14	9-Apr-14	10-Apr-14
Constituent[1]	**Units**	**Result**	**Result**	**Result**	**Result**	**Result**	**Result**	**Result**	**Result**	**Result**	**Result**	**Result**	**Result**	**Result**	**Result**	**Result**
gamma-BHC (Lindane)	µg/L	ND	ND	ND	ND	ND	ND	ND	ND	ND	ND	ND	ND	ND	ND	ND
Glyphosate	µg/L	ND	ND	ND	ND	ND	ND	ND	ND	ND	ND	ND	ND	ND	ND	ND
Hardness as CaCO3	mg/L	11070	6723	9880	5350	6748	5561	8776	5486	5995	6405	12494	7768	5950	5928	1278
Heptachlor	µg/L	ND	ND	ND	ND	ND	ND	ND	ND	ND	ND	ND	ND	ND	ND	ND
Heptachlor Epoxide	µg/L	ND	ND	ND	ND	ND	ND	ND	ND	ND	ND	ND	ND	ND	ND	ND
Hexachlorobenzene	µg/L	ND	ND	ND	ND	ND	ND	ND	ND	ND	ND	ND	ND	ND	ND	ND
Hexachlorobutadiene	µg/L	ND	ND	ND	ND	ND	ND	ND	ND	ND	ND	ND	ND	ND	ND	ND
Hexachlorocyclopentadiene	µg/L	ND	ND	ND	ND	ND	ND	ND	ND	ND	ND	ND	ND	ND	ND	ND
Hydroxide as CaCO3	mg/L	ND	ND	ND	ND	ND	ND	ND	ND	ND	ND	ND	ND	ND	ND	ND
Iodide, Dissolved	µg/L	ND	ND	190	ND	160	ND	ND	ND	ND	ND	ND	ND	ND	ND	ND
Iron, Dissolved	µg/L	362	2539	1780	814	171	57	246	148	ND	121	775	ND	151	130	148
Iron, Total	µg/L	362	2643	1928	922	178	162	367	238	138	164	878	241	205	389	185
Isopropylbenzene	µg/L	ND	ND	ND	ND	ND	ND	ND	ND	ND	ND	ND	ND	ND	ND	ND
Lithium	µg/L	218	120	140	120	170	140	149	75	173	164	191	127	63	31	5
m,p-Xylenes	µg/L	ND	ND	ND	ND	ND	ND	ND	ND	ND	ND	ND	ND	ND	ND	ND
Magnesium, Dissolved	mg/L	1041	683	1078	981	1215	928	936	605	1056	1015	1146	988	839	845	162
Magnesium, Total	mg/L	1040	674	1132	993	1230	920	942	616	1024	1012	1139	967	876	784	152
Manganese, Dissolved	µg/L	127	166	361	349	ND	172	ND	ND	ND	ND	657	133	204	172	345
Manganese, Total	µg/L	134	187	382	387	78	131	ND	ND	ND	ND	650	128	210	164	320
Mass Balance, Total	meq/L	-	-	-	-	-	-	-	-	-	-	-	-	-	-	-
Mass Balance-Dissolved Anions	meq/L	439.7	271.9	567.6	436.9	458.5	424.8	405.7	226.8	439	449	432.7	422.8	313.2	342	64.9
Mass Balance-Dissolved Cations	meq/L	423.3	261.6	564.9	458.9	464.6	387.0	399.0	215.5	418	418	464.8	459.7	331.6	349	70.3
MBAS (Surfactants)	mg/L	ND	ND	ND	ND	ND	ND	ND	ND	ND	ND	ND	ND	ND	ND	ND
Methiocarb	µg/L	-	-	-	-	-	-	ND	ND	ND	ND	ND	ND	ND	ND	ND
Methomyl	µg/L	ND	ND	ND	ND	ND	ND	ND	ND	ND	ND	ND	ND	ND	ND	ND
Methoxychlor	µg/L	ND	ND	ND	ND	ND	ND	ND	ND	ND	ND	ND	ND	ND	ND	ND
Methyl tert-butyl ether (MTBE)	µg/L	ND	ND	ND	ND	ND	ND	ND	ND	ND	ND	ND	ND	ND	ND	ND
Metolachlor	µg/L	ND	ND	ND	ND	ND	ND	ND	ND	ND	ND	ND	ND	ND	ND	ND
Metribuzin	µg/L	ND	ND	ND	ND	ND	ND	ND	ND	ND	ND	ND	ND	ND	ND	ND
Molinate	µg/L	ND	ND	ND	ND	ND	ND	ND	ND	ND	ND	ND	ND	ND	ND	ND
Naphthalene	µg/L	ND	ND	ND	ND	ND	ND	ND	ND	ND	ND	ND	ND	ND	ND	ND
n-Butylbenzene	µg/L	ND	ND	ND	ND	ND	ND	ND	ND	ND	ND	ND	ND	ND	ND	ND
Nitrate as NO3	mg/L	ND	ND	ND	2	2	3	ND	2	2	ND	ND	2	3	4	21
Nitrate+Nitrite as N	mg/L	ND	0.2	ND	0.4	0.4	0.8	ND	0.6	0.5	ND	ND	0.3	0.7	0.9	4.9
Nitrite as NO2-N, Dissolved	mg/L	ND	ND	ND	ND	ND	ND	0.4	0.2	ND	ND	ND	ND	ND	ND	0.2
n-Propylbenzene	µg/L	ND	ND	ND	ND	ND	ND	ND	ND	ND	ND	ND	ND	ND	ND	ND
Odor	TON	1	1	1	1	1	1	1	2	1	1	2	3	1	1	4
Orthophosphate as P, Dissolved	mg/L	0.05	0.09	0.08	0.07	0.07	ND	ND	ND	ND	0.05	ND	ND	ND	ND	ND
Oxamyl	µg/L	ND	ND	ND	ND	ND	ND	ND	ND	ND	ND	ND	ND	ND	ND	ND
Oxidation-Reduction Potential (Field)	mV	61.1	-32.4	-253.3	-56.6	7.9	-67.3	49	30.9	45.6	16.2	-38.4	36.8	34	74.9	6.5
o-Xylene	µg/L	ND	ND	ND	ND	ND	ND	ND	ND	ND	ND	ND	ND	ND	ND	ND
PCB Aroclor Screen	µg/L	-	-	-	-	-	-	-	-	-	-	-	-	-	-	-
PCBs, Total	µg/L	ND	ND	ND	ND	ND	ND	ND	ND	ND	ND	ND	ND	ND	ND	ND
Pentachlorophenol	µg/L	ND	ND	ND	ND	ND	ND	ND	ND	ND	ND	ND	ND	ND	ND	ND
Perylene-d12	µg/L	-	-	-	-	-	-	-	-	-	-	-	-	-	-	-
pH	pH Units	6.7	6.9	6.9	6.9	7.2	7.3	7.0	7.4	7.2	7.2	6.8	6.9	6.9	6.6	7.1

Table 3B

Summary of Isolated Aquifer Zone Testing Field and Laboratory Water Quality Results - CEMEX - Marina, CA

Borehole:		CX-B1WQ						CX-B2WQ				CX-B4				
Zone #:		1	2	3	4	5	6	1	2	3	4	1	2	3	4	5
Screen Interval (ft bgs):		274 - 284	237 - 247	182 - 192	134 - 144	84 - 94	51 - 61	215 - 225	161 - 171	104 - 114	55 - 65	306 - 316	248 - 258	155 - 165	110 - 120	58 - 68
Sample Date:		18-Feb-14	19-Feb-14	21-Feb-14	22-Feb-14	23-Feb-14	25-Feb-14	8-Mar-14	10-Mar-14	11-Mar-14	12-Mar-14	5-Apr-14	6-Apr-14	8-Apr-14	9-Apr-14	10-Apr-14
Constituent[1]	**Units**	**Result**	**Result**	**Result**	**Result**	**Result**	**Result**	**Result**	**Result**	**Result**	**Result**	**Result**	**Result**	**Result**	**Result**	**Result**
pH (Field)	pH Units	6.54	6.79	6.79	6.82	7.05	7.18	6.71	6.69	6.96	7.12	6.61	6.66	6.75	6.63	6.92
pH Temperature in °C	°C	-	-	-	-	-	-	-	-	-	-	-	-	-	-	-
Phosphorus, Dissolved	mg/L	0.06	0.10	0.08	0.07	0.07	ND	ND	ND	ND	0.05	ND	0.09	ND	ND	ND
Picloram	µg/L	ND	ND	ND	ND	ND	ND	ND	ND	ND	ND	ND	ND	ND	ND	ND
p-Isopropyltoluene	µg/L	ND	ND	ND	ND	ND	ND	ND	ND	ND	ND	ND	ND	ND	ND	ND
Potassium, Dissolved	mg/L	53	35	34	256	221	186	55	73	201	226	52	67	56	98	9.6
Potassium, Total	mg/L	-	-	-	-	-	-	-	-	-	-	-	-	-	-	-
Prometon	µg/L	-	-	-	-	-	-	-	-	-	-	-	-	-	-	-
Prometryn	µg/L	-	-	-	-	-	-	ND	ND	ND	ND	ND	ND	ND	ND	ND
Propachlor	µg/L	ND	ND	ND	ND	ND	ND	ND	ND	ND	ND	ND	ND	ND	ND	ND
Propoxur (Baygon)	µg/L	-	-	-	-	-	-	ND	ND	ND	ND	ND	ND	ND	ND	ND
QC Ratio TDS/SEC		0.68	0.59	0.73	0.67	0.67	0.67	0.72	0.73	0.66	0.66	0.78	0.71	0.78	0.80	0.70
sec-Butylbenzene	µg/L	ND	ND	ND	ND	ND	ND	ND	ND	ND	ND	ND	ND	ND	ND	ND
Silica as SiO2, Dissolved	mg/L	34	ND	25	27	19	18.0	34	30	20	19	34	32	30	27	28
Simazine	µg/L	ND	ND	ND	ND	ND	ND	ND	ND	ND	ND	ND	ND	ND	ND	ND
Sodium, Dissolved	mg/L	4612	2914	8612	7968	7500	6219	5135	2437	6643	6536	4864	6747	4958	5041	987
Sodium, Total	mg/L	-	-	-	-	-	-	-	-	-	-	-	-	-	-	-
Specific Conductance (EC)	µmhos/cm	36940	24570	48770	39610	40900	37260	36680	22060	40720	40270	38270	38210	26270	29810	6910
Specific Conductance (EC) (Field)	µS/cm	36601	23705	47112	39592	41336	35952	35199	21620	40173	39657	37688	38354	28707	29933	6988
Strontium, Dissolved	µg/L	16834	11,000	12000	9400	10000	9500	13328	8621	9020	9966	17696	11232	8713	10508	2167
Styrene	µg/L	ND	ND	ND	ND	ND	ND	ND	ND	ND	ND	ND	ND	ND	ND	ND
Sulfate as SO4, Dissolved	mg/L	1760	991	2688	1832	1882	1748	1674	713	1855	1822	1663	1789	1202	1358	269
TCMX	µg/L	0.0677	0.110	0.0753	0.0752	0.0796	-	0.112	0.111	0.112	0.0770	0.0855	0.0933	0.0960	0.100	0.0943
Temperature (Field)	°C	18.9	18.7	18.8	18.8	17.2	17.5	18.8	18.3	17.6	17.8	20.9	19.4	19.4	18.9	19.1
Terbacil	µg/L	-	-	-	-	-	-	-	-	-	-	-	-	-	-	-
tert-Amyl Methyl Ether (TAME)	µg/L	ND	ND	ND	ND	ND	ND	ND	ND	ND	ND	ND	ND	ND	ND	ND
tert-Butyl alcohol (TBA)	µg/L	ND	ND	ND	ND	ND	ND	ND	ND	ND	ND	ND	ND	ND	ND	ND
tert-Butylbenzene	µg/L	ND	ND	ND	ND	ND	ND	ND	ND	ND	ND	ND	ND	ND	ND	ND
Tetrachloroethene (PCE)	µg/L	ND	ND	ND	ND	ND	ND	ND	ND	ND	ND	ND	ND	ND	ND	ND
Tetrachloro-meta-xylene (TCMX)	%	71	115	79	79	84	111	117	116	118	81	90	98	102	105	99
Thiobencarb	µg/L	ND	ND	ND	ND	ND	ND	ND	ND	ND	ND	ND	ND	ND	ND	ND
Toluene	µg/L	ND	ND	ND	ND	ND	ND	ND	ND	ND	ND	ND	ND	ND	ND	ND
Total Anions	meq/L	-	-	-	-	-	-	-	-	-	-	-	-	-	-	-
Total Cations	meq/L	424.7	262.0	596.2	463.6	463.4	387.9	406.1	222.0	407	415	463.4	450.4	347.4	319	64.0
Total Dissolved Solids	mg/L	25200	14600	35600	26500	27400	24800	26500	16200	26800	26700	29800	27200	20500	24000	4815
Total Dissolved Solids (Field)	mg/L	24888	16122.8	32034.8	26921.2	28111.2	24452.8	23936	14708.4	27315.6	26968.3	25629.2	26084.8	19522.8	20352.4	4760
Total Kjehldahl Nitrogen, Dissolved	mg/L	ND	0.4	0.3	0.4	0.5	ND	ND	ND	ND	ND	ND	ND	ND	ND	ND
Total Oxidizable Nitrogen, as N	mg/L	-	-	-	-	-	-	-	-	-	-	-	-	-	-	-
Total Trihalomethanes	µg/L	ND	ND	ND	ND	ND	ND	ND	ND	ND	ND	ND	ND	ND	ND	ND
Toxaphene	µg/L	ND	ND	ND	ND	ND	ND	ND	ND	ND	ND	ND	ND	ND	ND	ND
trans-1,2-Dichloroethene	µg/L	ND	ND	ND	ND	ND	ND	ND	ND	ND	ND	ND	ND	ND	ND	ND
trans-1,3-Dichloropropene	µg/L	ND	ND	ND	ND	ND	ND	ND	ND	ND	ND	ND	ND	ND	ND	ND
Trichloroethene (TCE)	µg/L	ND	ND	ND	ND	ND	ND	ND	ND	ND	ND	ND	ND	ND	ND	ND
Trichlorofluoromethane	µg/L	ND	ND	ND	ND	ND	ND	ND	ND	ND	ND	ND	ND	ND	ND	ND
Trifluralin	µg/L	ND	ND	ND	ND	ND	ND	ND	ND	ND	ND	ND	ND	ND	ND	ND
Triphenyl phosphate	µg/L	-	-	-	-	-	-	-	-	-	-	-	-	-	-	-

Summary of Isolated Aquifer Zone Testing Field and Laboratory Water Quality Results - CEMEX - Marina, CA

Borehole:		CX-B1WQ						CX-B2WQ				CX-B4				
Zone #:		1	2	3	4	5	6	1	2	3	4	1	2	3	4	5
Screen Interval (ft bgs):		274 - 284	237 - 247	182 - 192	134 - 144	84 - 94	51 - 61	215 - 225	161 - 171	104 - 114	55 - 65	306 - 316	248 - 258	155 - 165	110 - 120	58 - 68
Sample Date:		18-Feb-14	19-Feb-14	21-Feb-14	22-Feb-14	23-Feb-14	25-Feb-14	8-Mar-14	10-Mar-14	11-Mar-14	12-Mar-14	5-Apr-14	6-Apr-14	8-Apr-14	9-Apr-14	10-Apr-14
Constituent[1]	**Units**	**Result**	**Result**	**Result**	**Result**	**Result**	**Result**	**Result**	**Result**	**Result**	**Result**	**Result**	**Result**	**Result**	**Result**	**Result**
Trithion	µg/L	-	-	-	-	-	-	-	-	-	-	-	-	-	-	-
Tritium	pCi/L	-	-	-	-	-	-	-	-	-	-	-	-	-	-	-
Tritium, prec. est.[2]	TU	0.35 ± 0.09	0.04 ± 0.09	0.01 ± 0.09	0.50 ± 0.09	0.48 ± 0.09	0.81 ± 0.09	0.10 ± 0.09	0.18 ± 0.09	0.44 ± 0.09	0.62 ± 0.09	pending	pending	pending	pending	pending
Turbidity	NTU	1.6	2.9	0.70	4.6	0.75	0.45	0.40	0.65	0.65	1.5	0.20	1.3	0.65	1.0	1.4
Turbidity (Field)	NTU	0.57	1.20	0.25	0.24	0.47	0.33	0.91	0.49	0.57	0.63	0.54	1.46	0.18	0.85	1.12
Vinyl Chloride	µg/L	ND	ND	ND	ND	ND	ND	ND	ND	ND	ND	ND	ND	ND	ND	ND
Xylenes, Total	µg/L	ND	ND	ND	ND	ND	ND	ND	ND	ND	ND	ND	ND	ND	ND	ND
Zinc, Total	µg/L	99	ND	ND	ND	ND	ND	218	217	384	356	ND	ND	ND	38	ND

Notes:

°C = Degrees Celsius
CU = Color Units
$\delta^{18}O$ (‰) = Delta Oxygen-18
$\delta^{2}H$ (‰) = Delta-Deuterium
meq/L = Milliequivalents per Liter
mg/L = Milligrams per Liter
mV = Millivolts
NTU = Nephelometric Turbidity Units
pCi/L = Pico Curies per Liter
pg/L = Picograms per Liter
TON = Threshold Odor Number
TU = Tritium Units
µg/L = Micorgrams per Liter
µmhos/cm = Micromhos per Centimeter
µS/cm = MicroSiemens per Centimeter

ND = NOT DETECTED at or above the Reporting Limit or Practical Quantitation Limit. If J-value reported, then NOT DETECTED at or above the Method Detection Limit (MDL)

[1] See laboratory water quality reports in Appendix G for method numbers, dilution factors, Method Detection Limits, and Reporting Limits.
[2] Laboratory water quality results pending.

Hydraulic Conductivity for Geologic Units at CEMEX

Q_{od}	Borehole	CX-B1				CX-B2				CX-B3				CX-B4			
	Weighed average K for each soil Type[1]	% thickness	Lithology	Min K [ft/day]	Max [ft/day]	% thickness	Lithology	Min K [ft/day]	Max [ft/day]	% thickness	Lithology	Min K [ft/day]	Max [ft/day]	% thickness	Lithology	Min K [ft/day]	Max [ft/day]
		1.00	SM: Silty Sand	45	130	1.00	SW: Well-Graded Sand	292	770	1.00	SP: Sand	74	224	1.00	SP: Sand	135	365
	Total K value [ft/day]			**45**	**130**			**292**	**770**			**74**	**224**			**135**	**365**

Q_t	Borehole	CX-B1				CX-B2				CX-B3				CX-B4			
	Weighed average K for each soil Type[1]	% thickness	Lithology	Min K [ft/day]	Max [ft/day]	% thickness	Lithology	Min K [ft/day]	Max [ft/day]	% thickness	Lithology	Min K [ft/day]	Max [ft/day]	% thickness	Lithology	Min K [ft/day]	Max [ft/day]
		0.25	GW: Gravel	334	849	0.67	SP: Sand	16	65	0.50	SP: Sand	21	69	1.00	SP: Sand	95	234
		0.38	SW: Well-Graded Sand	330	1,121	0.33	SM: Silty Sand	83	211	0.50	SM: Silty Sand	130	509				
		0.38	SM: Silty Sand	98	266												
	Total K value [ft/day]			**244**	**732**			**38**	**114**			**76**	**289**			**95**	**234**

[1] For each soil type, an average is calculated for each method (Hazen, Krumbein-Monk, and Kozeny-Carman) with a weighed factor of thickness. The min K and max K for each soil type is the minimum and maximum among these three weighed average K value.

Table 4

Hydraulic Conductivity for Geologic Units at MOSS LANDING

	Borehole	MDW-1				ML-1				ML-2				ML-3			
		% thickness	Lithology	Min K [ft/day]	Max [ft/day]	% thickness	Lithology	Min K [ft/day]	Max [ft/day]	% thickness	Lithology	Min K [ft/day]	Max [ft/day]	% thickness	Lithology	Min K [ft/day]	Max [ft/day]
Dune Sand	Weighed average K for each soil Type[1]	1.00	SP: Sand	135	300					1.00	SW: Well-Graded Sand	383	1,090				
	Total K value [ft/day]			**135**	**300**							**383**	**1,090**				
	Borehole	**MDW-1**				**ML-1**				**ML-2**				**ML-3**			
		% thickness	Lithology	Min K [ft/day]	Max [ft/day]	% thickness	Lithology	Min K [ft/day]	Max [ft/day]	% thickness	Lithology	Min K [ft/day]	Max [ft/day]	% thickness	Lithology	Min K [ft/day]	Max [ft/day]
Perched "A" Aquifer	Weighed average K for each soil Type[1]	1.00	SP: Sand	170	477	0.13	SP: Sand with Gravel	469	1,175	0.33	SW: Well-Graded Sand with Gravel	484	949	1.00	SP: Sand	166	564
						0.13	SP-SM: Sand with Silt and Gravel	445	1,322	0.67	SP: Sand	34	102				
						0.75	SP: Sand	109	393								
	Total K value [ft/day]			**170**	**477**			**196**	**607**			**184**	**385**			**166**	**564**

[1] For each soil type, an average is calculated for each method (Hazen, Krumbein-Monk, and Kozeny-Carman) with a weighed factor of thickness. The min K and max K for each soil type is the minimum and maximum among these three weighed average K value.

Table 5

Hydraulic Conductivity for Geologic Units at MOSS LANDING

	Borehole	ML-4				ML-6				PR-1			
	Weighed average K for each soil Type[1]	% thickness	Lithology	Min K [ft/day]	Max [ft/day]	% thickness	Lithology	Min K [ft/day]	Max [ft/day]	% thickness	Lithology	Min K [ft/day]	Max [ft/day]
Dune Sand		1.00	SP: Sand	164	468								
	Total K value [ft/day]			**164**	**468**								
	Borehole	**ML-4**				**ML-6**				**PR-1**			
	Weighed average K for each soil Type[1]	% thickness	Lithology	Min K [ft/day]	Max [ft/day]	% thickness	Lithology	Min K [ft/day]	Max [ft/day]	% thickness	Lithology	Min K [ft/day]	Max [ft/day]
Perched "A" Aquifer		1.00	SP: Sand	75	212	0.60	SP: Sand	32	92	0.20	SW: Well-Graded Sand with Gravel	699	1,148
						0.20	SW: Well-Graded Sand	149	610	0.20	SM: Silty Sand with Gravel	311	1,150
						0.20	SP-SM: Sand with Silt	48	178	0.20	SP: Sand with Gravel	302	561
										0.20	SP: Sand	165	396
										0.20	SW: Well-Graded Sand	1,055	9,561
	Total K value [ft/day]			**75**	**212**			**59**	**213**			**506**	**2563**

Table 5

CEMEX Area - Maximum K Values

Well	Dune Sand Aquifer					180-Foot Aquifer (or Equivalent)				
	Thickness [ft]	% Coarse	% Fine	Kc [ft/d]	Kf [ft/d]	Thickness [ft]	% Coarse	% Fine	Kc [ft/d]	Kf [ft/d]
CX-B1	86	1.00	0.00	270	na	160	0.81	0.18	508	0.0149
CX-B2	91	0.98	0.02	373	0.0270	148	0.77	0.23	152	0.0190
CX-B3	91	0.95	0.05	308	0.0270	164	0.77	0.23	277	0.0185
CX-B4	90	1.00	0.00	295	na	195	0.77	0.23	190	0.0227
Average	90	0.98	0.02	311	0.0270	167	0.78	0.22	282	0.0188

Table 6

CEMEX Area - Minimum K Values

Well	Dune Sand Aquifer					180-Foot Aquifer (or Equivalent)				
	Thickness [ft]	% Coarse	% Fine	Kc [ft/d]	Kf [ft/d]	Thickness [ft]	% Coarse	% Fine	Kc [ft/d]	Kf [ft/d]
CX-B1	86	1.00	0.00	96	na	160	0.81	0.18	156	0.0043
CX-B2	91	0.98	0.02	136	0.0210	148	0.77	0.23	52	0.0100
CX-B3	91	0.95	0.05	110	0.0210	164	0.77	0.23	90	0.0092
CX-B4	90	1.00	0.00	105	na	195	0.77	0.23	71	0.0150
Average	90	0.98	0.02	112	0.0210	167	0.78	0.22	92	0.0096

Table 7

Table 8

Moss Landing Area - Maximum K Values

Well	Dune Sand Aquifer/ Perched "A" Aquifer				
	Thickness [ft]	% Coarse	% Fine	Kc [ft/d]	Kf [ft/d]
ML-1	146	0.32	0.68	485	0.0222
ML-2	200	0.65	0.35	783	0.0199
ML-3	200	0.30	0.70	841	0.0201
ML-4	201	0.63	0.37	618	0.0183
ML-6	200	0.64	0.36	704	0.0220
Average	189	0.51	0.49	686	0.0205
PR-1	139	0.93	0.07	1303	0.0213

Table 9

Moss Landing Area - Minimum K Values

Well	Dune Sand Aquifer/ Perched "A" Aquifer				
	Thickness [ft]	% Coarse	% Fine	Kc [ft/d]	Kf [ft/d]
ML-1	146	0.32	0.68	166	0.0144
ML-2	200	0.65	0.35	228	0.0112
ML-3	200	0.30	0.70	235	0.0114
ML-4	201	0.63	0.37	200	0.0089
ML-6	200	0.64	0.36	210	0.0140
Average	189	0.51	0.49	208	0.0120
PR-1	139	0.93	0.07	397	0.0131

APPENDIX A1

Borehole Lithologic Logs

GEOSCIENCE

APPENDIX A1:

BOREHOLE LITHOLOGIC LOGS

CONTENTS

Description **Page**

Borehole CX-B1 ..... *A1-1*

Borehole CX-B2 ..... *A1-7*

Borehole CX-B3 ..... *A1-13*

Borehole CX-B4 ..... *A1-20*

Borehole MDW-1 ..... *A1-27*

Borehole ML-1 ..... *A1-33*

Borehole ML-2 ..... *A1-37*

Borehole ML-3 ..... *A1-41*

Borehole ML-4 ..... *A1-45*

Borehole ML-6 ..... *A1-49*

Borehole PR-1 ..... *A1-53*

GEOSCIENCE
P.O. Box 220
Claremont, CA 91711
Telephone: (909) 451-6650
Fax: (909) 451-6638
www.gssiwater.com

BOREHOLE LITHOLOGIC LOG

BOREHOLE NAME **CX-B1**					
CLIENT	California American Water	LOCATION **Marina, CA** **CEMEX Lapis Plant** **36° 42' 47.3796", -121° 48' 21.2364"** **Geographic NAD83**			
PROJECT NUMBER	13017-13				
REPORT DATE	5/23/2014				
DRILLING CONTRACTOR	Cascade Drilling	LOGGED BY **B. Villalobos**			
DRILLER	Jose Munguia				
DRILLING RIG TYPE	Prosonic 600T	DRILLING METHOD	Sonic	START DATE	10/22/13
BOREHOLE DIAMETER	9 in/8 in	SURFACE ELEVATION	28.0 ft	TOTAL DEPTH	306 ft bgs
FINISH DATE	10/29/13	CORE SIZE	6 in		

Lithologic Log

Depth bgs (feet)	GAMMA (GAPI) 0 110	CLID (mmho/m) 1500 0	Zone* Test	Graphic Log	NOTE: Grain size distribution percentages are approximate. Material code (e.g. SP) reference Unified Soil Classification visual method. Color code (e.g. 10YR 5/2) reference Munsell Soil Color Charts.	Depth bgs (feet)	Sample Type
5					SAND (SP): brown (10YR 4/3) and dark grayish brown (10YR 4/2), 100% fine to medium grained sand, subrounded, poorly graded, <5% dark mineral sand grains; trace silt, interbedded; medium sorted; dry sample; contains feldspar and amphibole.	5	
10						10	
15					SAND (SP): yellowish brown (10YR 5/8), 100% fine grained sand, subrounded, poorly graded, <2% dark mineral sand grains; well sorted; dry sample; contains quartz.	15	
20					SAND (SP): yellowish brown (10YR 5/4), 100% fine to medium grained sand, subrounded; trace silt, silty sand interbedding; medium sorted; dry sample; contains feldspar and amphibole. SAND (SP): yellowish brown (10YR 5/6), 100% fine to medium grained sand, subrounded; medium sorted; moist sample; contains quartz, feldspar and amphibole.	20	
25					SAND (SP): dark yellowish brown (10YR 4/6), 100% medium grained sand; trace silt, trace gray silt lenses; wet sample; contains quartz, feldspar and amphibole.	25	
30					SAND (SP): greenish gray (5GY 5/1), 100% medium grained sand, subrounded, <5% dark mineral sand grains, <0.5% coarse sand grains; well sorted; wet sample; contains quartz, feldspar and amphibole. SAND (SP): yellowish brown (10YR 5/8), 100% medium grained sand, subrounded, poorly graded, <5% dark mineral sand grains; well sorted; wet sample; contains quartz, feldspar and amphibole.	30	
35						35	
40					SAND (SP): yellowish brown (10YR 5/4), 100% medium grained sand, subrounded, poorly graded, beds of medium to coarse sand; trace fine gravel up to 12.7 mm, subrounded; trace silt, brown and gray streaks of silty sand; medium sorted; wet sample; contains quartz, feldspar, amphibole, siltstones, and chert.	40	
45						45	
50					SAND (SP): grayish brown (2.5Y 5/2), 100% medium to coarse grained sand, subrounded to rounded; trace fine gravel up to 4.8 mm, subrounded to rounded; poorly sorted; wet sample; contains quartz, feldspar, and chert; granitic. SAND (SP): yellowish brown (10YR 5/4), 90% medium to coarse grained sand, subrounded;	50	

SS: Splitspoon sample GRAB: Grab sample PTS: Splitspoon submitted for analysis SIEVE: Grab sieved by GSSI

Geoscience Support Services, Inc.

*Zone test details are for CX-B1WQ, approximately 80 ft west of CX-B1

GEOSCIENCE
P.O. Box 220
Claremont, CA 91711
Telephone: (909) 451-6650
Fax: (909) 451-6638
www.gssiwater.com

BOREHOLE NAME **CX-B1**

BOREHOLE LITHOLOGIC LOG (continued)

CLIENT California American Water
PROJECT NUMBER 13017-13
LOCATION **Marina, CA**

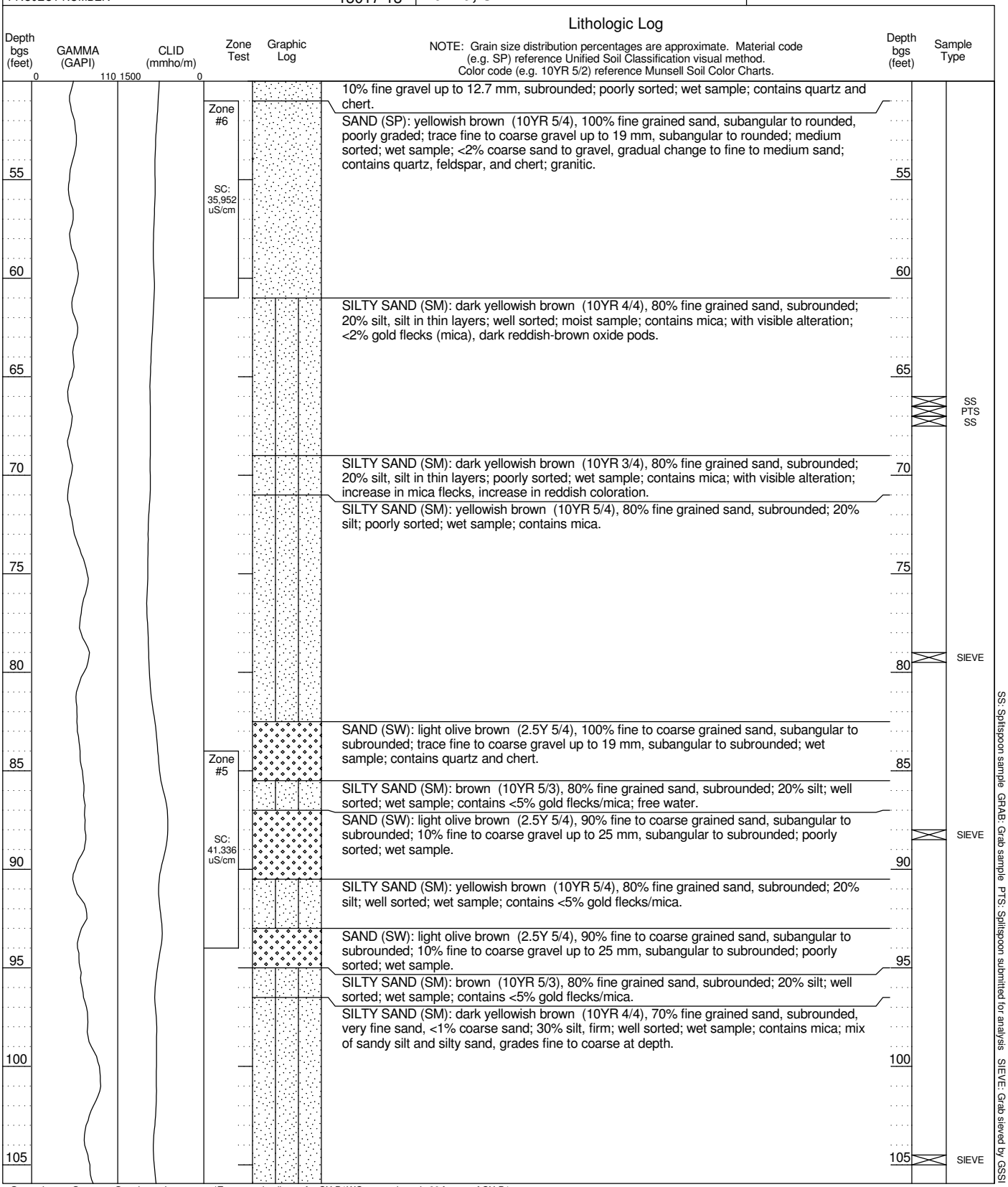

SS: Splitspoon sample GRAB: Grab sample PTS: Splitspoon submitted for analysis SIEVE: Grab sieved by GSSI

Geoscience Support Services, Inc.

*Zone test details are for CX-B1WQ, approximately 80 ft west of CX-B1

GEOSCIENCE
P.O. Box 220
Claremont, CA 91711
Telephone: (909) 451-6650
Fax: (909) 451-6638
www.gssiwater.com

BOREHOLE NAME **CX-B1**

BOREHOLE LITHOLOGIC LOG (continued)

CLIENT California American Water
PROJECT NUMBER 13017-13
LOCATION **Marina, CA**

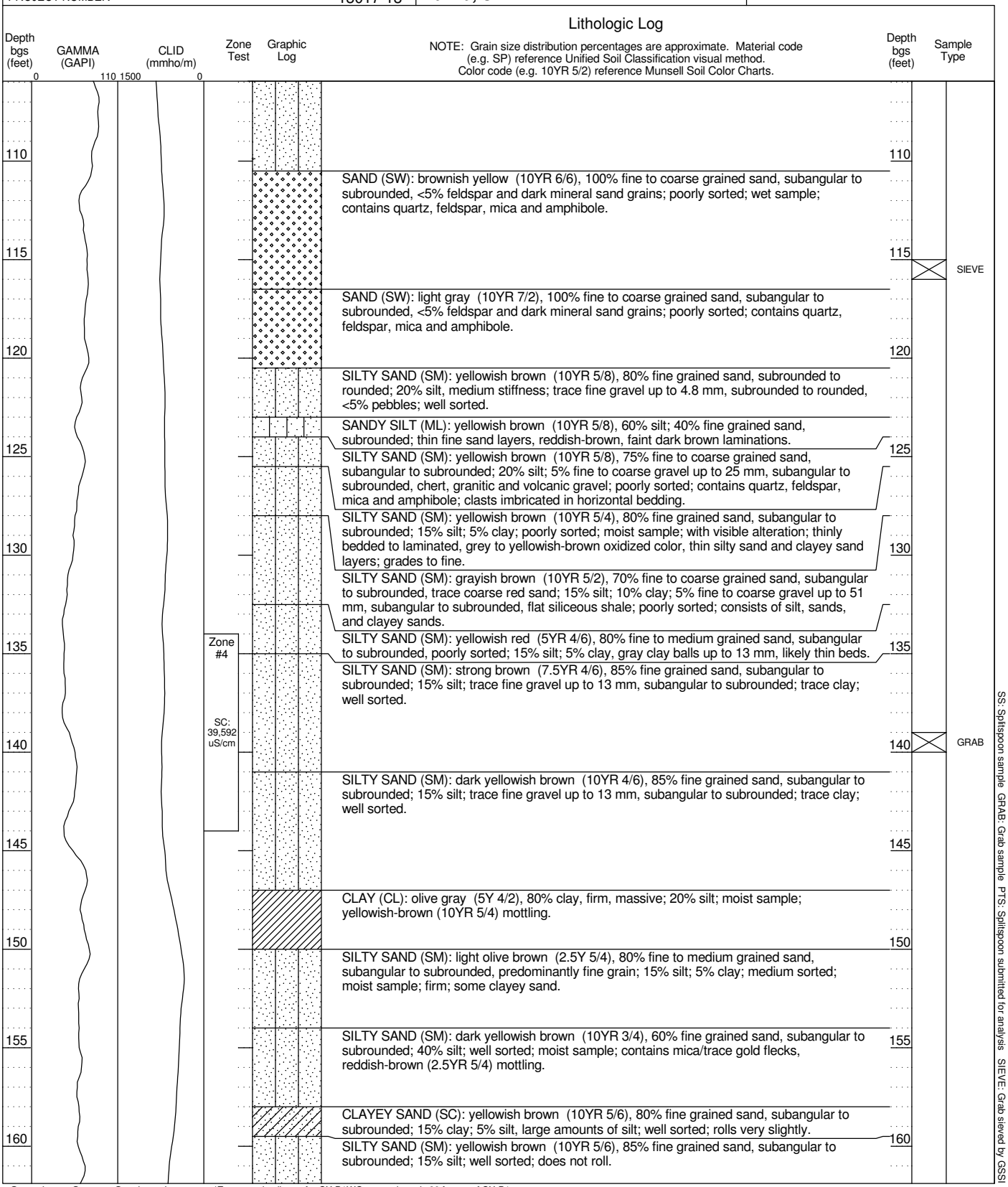

Geoscience Support Services, Inc.

*Zone test details are for CX-B1WQ, approximately 80 ft west of CX-B1

GEOSCIENCE
P.O. Box 220
Claremont, CA 91711
Telephone: (909) 451-6650
Fax: (909) 451-6638
www.gssiwater.com

BOREHOLE NAME **CX-B1**

BOREHOLE LITHOLOGIC LOG (continued)

CLIENT California American Water
PROJECT NUMBER 13017-13
LOCATION **Marina, CA**

Lithologic Log

NOTE: Grain size distribution percentages are approximate. Material code (e.g. SP) reference Unified Soil Classification visual method. Color code (e.g. 10YR 5/2) reference Munsell Soil Color Charts.

Depth bgs (feet)	GAMMA (GAPI) 0 110	CLID (mmho/m) 1500 0	Zone Test	Graphic Log	Lithologic Log	Depth bgs (feet)	Sample Type
					SANDY SILT (ML): dark yellowish brown (10YR 4/4), 50% fine grained sand, subangular to subrounded; 40% silt; 10% clay; well sorted; thin dark gray (10YR 4/1) clayey silt balls.		
165					SILTY SAND (SM): yellowish brown (10YR 5/6), 85% fine grained sand, subangular to subrounded; 15% silt; well sorted.	165	SS PTS SS
170					CLAYEY SAND (SC): yellowish brown (10YR 5/6), 80% fine grained sand, subangular to subrounded, fine, soft, dark yellowish brown (10YR 5/4) sand; 15% clay; 5% silt; well sorted; wet sample; consisting of silty sands and clayey sands, rolls slightly.	170	
175						175	
180					SAND WITH CLAY (SP-SC): dark yellowish brown (10YR 4/4), 90% fine grained sand, subangular to subrounded; 10% clay; well sorted; moderately indurated, slightly less clay.	180	
185			Zone #3		SILTY SAND (SM): dark yellowish brown (10YR 4/4), 85% fine grained sand, subangular to subrounded, well sorted; 15% silt.	185	
190			SC: 47,112 uS/cm		SILTY SAND (SM): dark grayish brown (10YR 4/2), 80% fine grained sand, subangular to subrounded, well sorted; 20% silt; moist sample; free water, material does not roll.	190	SIEVE
195					SILTY SAND (SM): dark yellowish brown (10YR 4/4), 80% fine grained sand, subangular to subrounded; 20% silt; well sorted; moist sample; material does not roll, contact oxidized 204 ft bgs, reddish-brown.	195	
200						200	
205					CLAY (CL): olive gray (5Y 5/2), 60% clay, stiff, 1 to 2 mm black clay balls (10YR 2/1); 40% silt, increases with depth.	205	SS
210					SAND (SW): brown (10YR 5/3), 100% fine to coarse grained sand, subangular to subrounded; trace fine gravel up to 5 mm, subangular to subrounded, <5% small gravel; poorly sorted; contains quartz, siliceous shale clasts, and chert.	210	
					SAND (SW): brown (10YR 5/3), 90% fine to coarse grained sand, subangular to subrounded; 10% fine to coarse gravel up to 38 mm, subangular to subrounded; poorly sorted; contains quartz, siliceous shale clasts, chert, and possibly tuff.		
215					SAND WITH GRAVEL (SW): brown (10YR 5/3), 85% fine to coarse grained sand, subangular to subrounded; 15% fine to coarse gravel up to 38 mm, subangular to subrounded; poorly sorted; contains quartz, siliceous shale clasts, and chert.	215	
					SAND (SW): dark yellowish brown (10YR 4/6), 90% fine to coarse grained sand, subangular		

SS: Splitspoon sample GRAB: Grab sample PTS: Splitspoon submitted for analysis SIEVE: Grab sieved by GSSI

*Zone test details are for CX-B1WQ, approximately 80 ft west of CX-B1

GEOSCIENCE
P.O. Box 220
Claremont, CA 91711
Telephone: (909) 451-6650
Fax: (909) 451-6638
www.gssiwater.com

BOREHOLE LITHOLOGIC LOG (continued)

BOREHOLE NAME	CLIENT	PROJECT NUMBER	LOCATION
CX-B1	California American Water	13017-13	**Marina, CA**

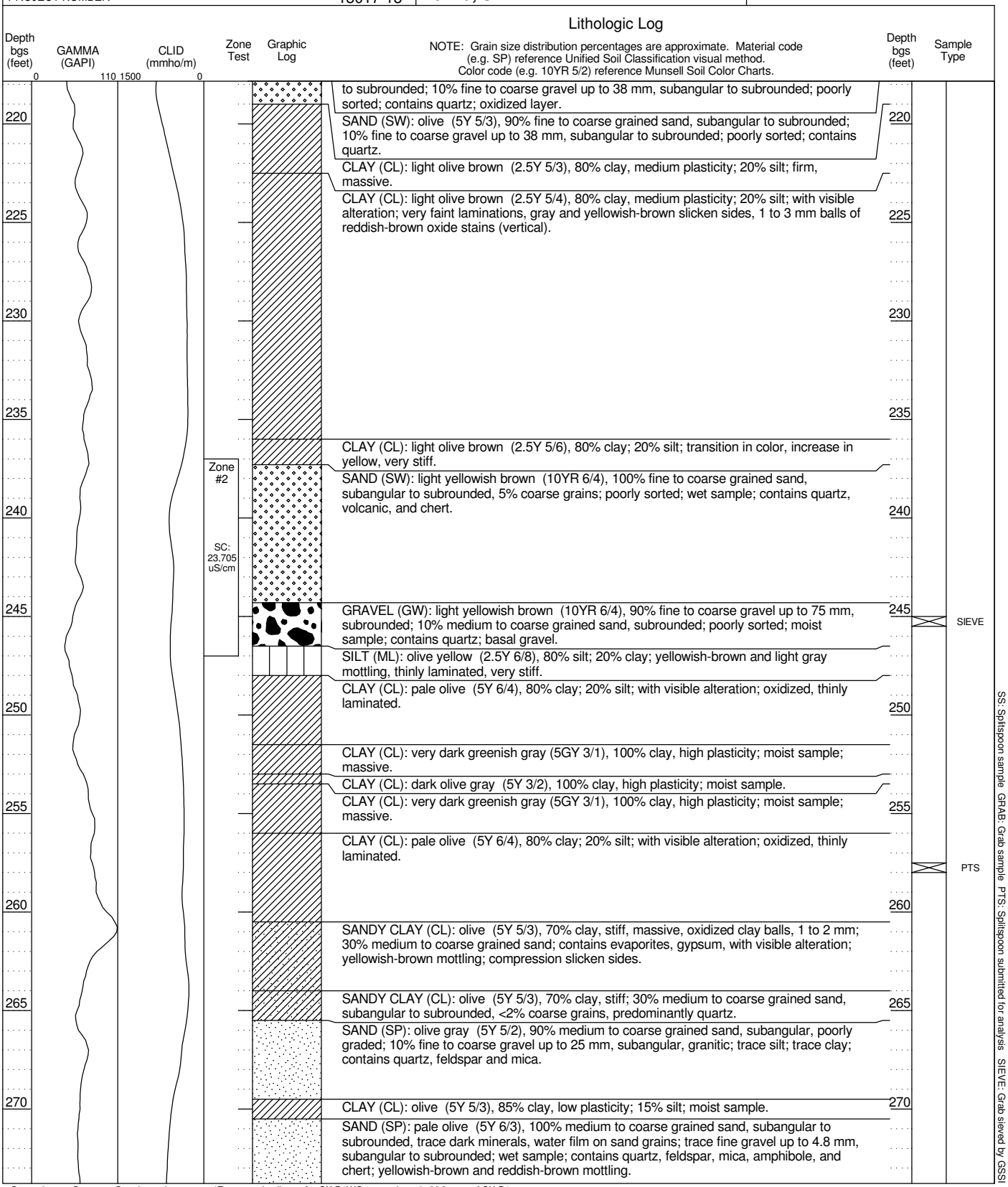

Geoscience Support Services, Inc.

*Zone test details are for CX-B1WQ, approximately 80 ft west of CX-B1

GEOSCIENCE
P.O. Box 220
Claremont, CA 91711
Telephone: (909) 451-6650
Fax: (909) 451-6638
www.gssiwater.com

BOREHOLE LITHOLOGIC LOG (continued)

BOREHOLE NAME	CLIENT	PROJECT NUMBER	LOCATION
CX-B1	California American Water	13017-13	**Marina, CA**

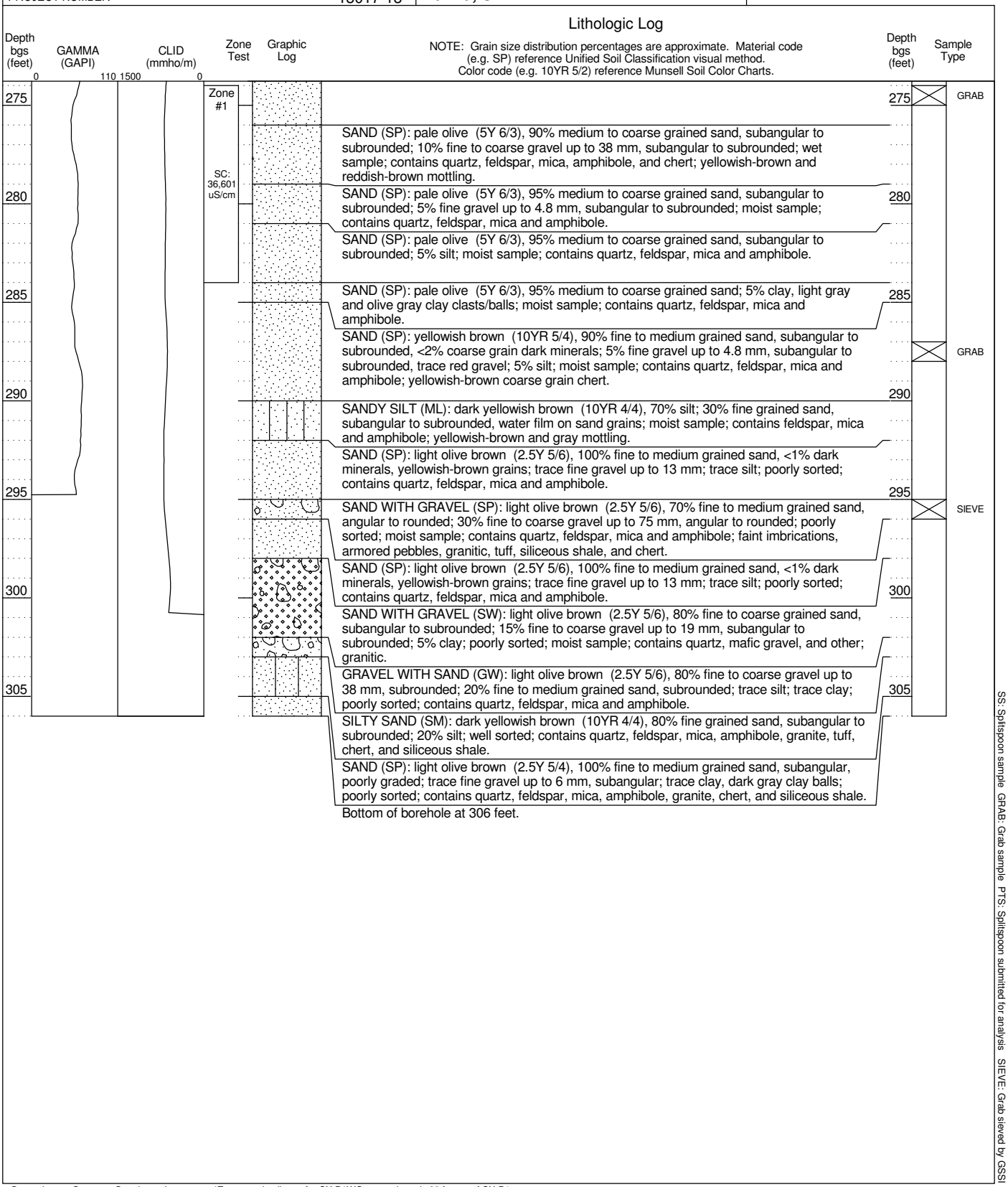

SS: Splitspoon sample GRAB: Grab sample PTS: Splitspoon submitted for analysis SIEVE: Grab sieved by GSSI

*Zone test details are for CX-B1WQ, approximately 80 ft west of CX-B1

GEOSCIENCE
P.O. Box 220
Claremont, CA 91711
Telephone: (909) 451-6650
Fax: (909) 451-6638
www.gssiwater.com

BOREHOLE LITHOLOGIC LOG

BOREHOLE NAME	**CX-B2**						
CLIENT	California American Water	LOCATION	**Marina, CA**				
PROJECT NUMBER	13017-13		**CEMEX Lapis Plant**				
REPORT DATE	5/23/2014		**36° 42' 46.2636", -121° 48' 13.4316"** **Geographic NAD83**				
DRILLING CONTRACTOR	Cascade Drilling	LOGGED BY	**N. Reynolds**				
DRILLER	Jose Munguia						
DRILLING RIG TYPE	Prosonic 600T	DRILLING METHOD	Sonic	START DATE	11/04/13	BOREHOLE DIAMETER	6.25 in
SURFACE ELEVATION	32.0 ft	TOTAL DEPTH	307 ft bgs	FINISH DATE	11/07/13	CORE SIZE	4 in

Lithologic Log

NOTE: Grain size distribution percentages are approximate. Material code (e.g. SP) reference Unified Soil Classification visual method. Color code (e.g. 10YR 5/2) reference Munsell Soil Color Charts.

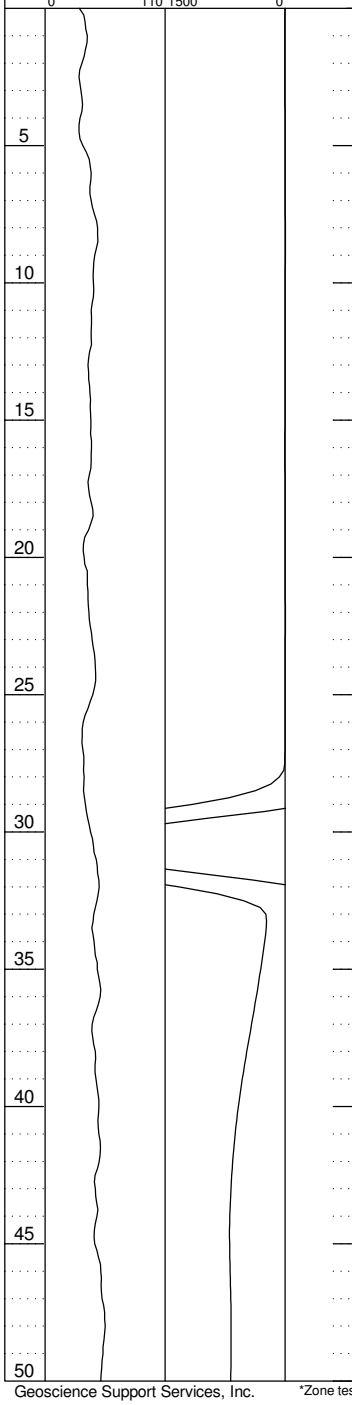

Depth bgs (feet)	Description
	SAND (SP): light olive brown (2.5Y 5/4), 100% fine to medium grained sand, subangular to rounded; trace fine to coarse gravel up to 28 mm, rounded; trace silt; poorly sorted; contains quartz, feldspar and amphibole; shell fragments.
	SILT (ML): light olive brown (2.5Y 5/3), 90% silt; 10% fine grained sand, subangular to subrounded; moderate cementation; decomposing minerals, shell fragments.
5	SAND (SP): light olive brown (2.5Y 5/4), 95% fine to medium grained sand, subangular to subrounded, predominantly fine; 5% silt; well sorted; contains quartz, feldspar and amphibole.
10	SAND (SP): brown (7.5YR 4/4), 95% fine to medium grained sand, subangular to subrounded; 5% silt; medium sorted; contains quartz, feldspar and amphibole.
	SAND (SP): light yellowish brown (2.5Y 6/4), 100% fine to medium grained sand, subangular to subrounded, predominantly fine; medium sorted; contains quartz, feldspar and amphibole.
15	
	SAND (SP): olive (5Y 5/3), 100% fine to medium grained sand, subangular to subrounded, predominantly fine; well sorted; contains quartz, feldspar and amphibole.
20	
	SANDY SILT (ML): olive (5Y 5/3), 70% silt; 30% fine to medium grained sand, subangular to subrounded; contains quartz, feldspar and amphibole; interbed.
	SAND (SP): light yellowish brown (2.5Y 6/4), 100% fine to medium grained sand, subangular to subrounded; medium sorted; contains quartz, feldspar and amphibole; gray interbeds.
25	
	SAND (SP): olive (5Y 5/3), 100% fine to medium grained sand, subangular to subrounded, predominantly fine; well sorted; contains quartz, feldspar and amphibole.
30	SILTY SAND (SM): gray (5Y 5/1), 85% fine grained sand, subangular to subrounded; 15% silt; medium sorted; dry sample; contains quartz, feldspar and amphibole; ; powdery.
	SAND (SP): light yellowish brown (2.5Y 6/4), 100% medium grained sand, subangular to subrounded; medium sorted; contains quartz, feldspar and amphibole.
35	SAND (SW): light yellowish brown (2.5Y 6/4), 100% fine to coarse grained sand, subangular to subrounded, predominantly medium to coarse; poorly sorted; contains quartz, feldspar, mica and amphibole.
40	
45	
50	

SS: Splitspoon sample GRAB: Grab sample PTS: Splitspoon submitted for analysis SIEVE: Grab sieved by GSSI

Geoscience Support Services, Inc.

*Zone test details are for CX-B2WQ, approximately 60 ft west of CX-B2

GEOSCIENCE
P.O. Box 220
Claremont, CA 91711
Telephone: (909) 451-6650
Fax: (909) 451-6638
www.gssiwater.com

BOREHOLE NAME **CX-B2**

BOREHOLE LITHOLOGIC LOG (continued)

CLIENT California American Water
PROJECT NUMBER 13017-13
LOCATION **Marina, CA**

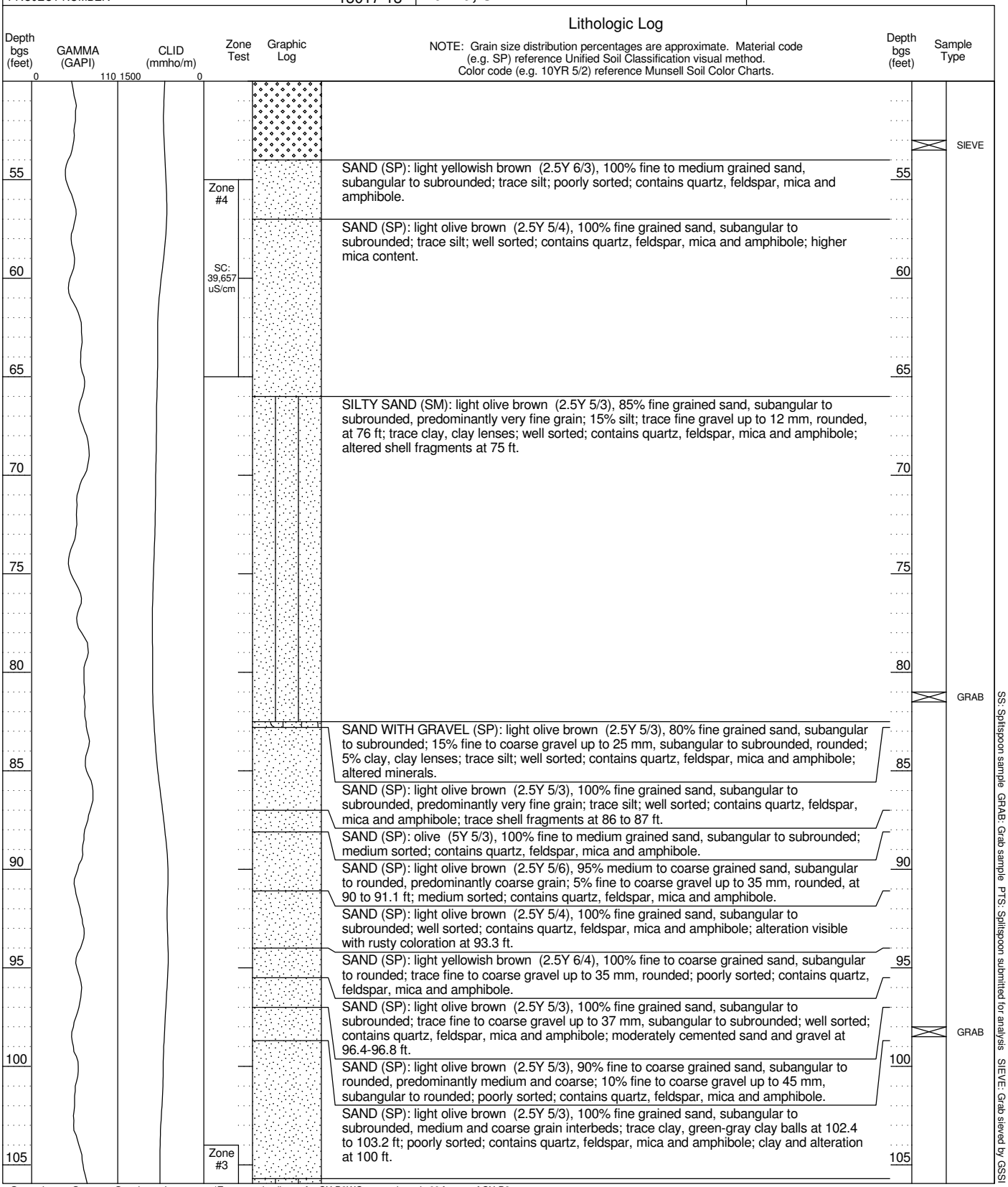

*Zone test details are for CX-B2WQ, approximately 60 ft west of CX-B2

GEOSCIENCE
P.O. Box 220
Claremont, CA 91711
Telephone: (909) 451-6650
Fax: (909) 451-6638
www.gssiwater.com

BOREHOLE NAME **CX-B2**

BOREHOLE LITHOLOGIC LOG (continued)

CLIENT California American Water
PROJECT NUMBER 13017-13
LOCATION **Marina, CA**

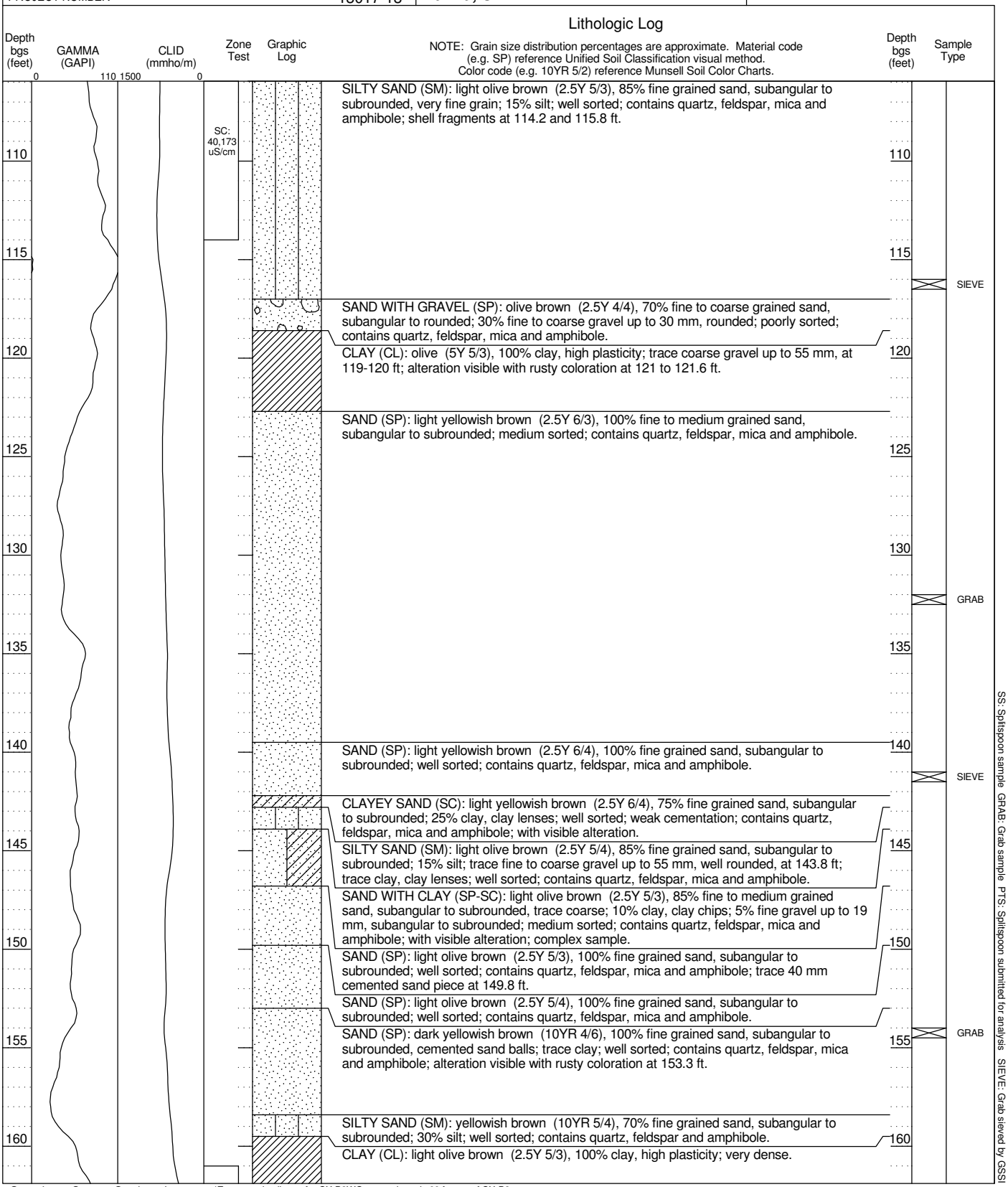

Geoscience Support Services, Inc.

*Zone test details are for CX-B2WQ, approximately 60 ft west of CX-B2

GEOSCIENCE
P.O. Box 220
Claremont, CA 91711
Telephone: (909) 451-6650
Fax: (909) 451-6638
www.gssiwater.com

BOREHOLE NAME **CX-B2**

BOREHOLE LITHOLOGIC LOG (continued)

CLIENT California American Water
PROJECT NUMBER 13017-13
LOCATION **Marina, CA**

Lithologic Log

NOTE: Grain size distribution percentages are approximate. Material code (e.g. SP) reference Unified Soil Classification visual method. Color code (e.g. 10YR 5/2) reference Munsell Soil Color Charts.

Depth bgs (feet)	GAMMA (GAPI) 0 110	CLID (mmho/m) 1500 0	Zone Test	Graphic Log	Lithologic Log	Depth bgs (feet)	Sample Type
165			Zone #2		SAND (SP): light olive brown (2.5Y 5/3), 100% fine grained sand, subangular to subrounded; well sorted; contains quartz, feldspar, mica and amphibole.	165	GRAB
170			SC: 21,620 uS/cm		CLAY WITH SAND (CL): light olive brown (2.5Y 5/3), 85% clay, medium plasticity; 15% fine grained sand, subangular to subrounded; contains quartz, feldspar and mica; some rust colored alteration; moderate cementation.	170	
175					SAND WITH CLAY (SP-SC): light yellowish brown (2.5Y 6/3), 90% fine grained sand, subangular to subrounded; 10% clay; trace fine gravel up to 14 mm, subangular to subrounded; well sorted; contains quartz, feldspar, mica and amphibole.	175	
180					CLAYEY SAND (SC): brown (10YR 4/3), 70% fine grained sand, subangular to subrounded; 30% clay; well sorted; contains quartz, feldspar, mica and amphibole.	180	
185					SAND (SP): yellowish brown (10YR 5/4), 100% fine grained sand, subangular to subrounded, predominantly very fine grain; trace silt; well sorted; contains quartz, feldspar, mica and amphibole; with visible alteration.	185	
190					SANDY CLAY (CL): dark yellowish brown (10YR 4/4), 60% clay, low plasticity, soft; 40% fine grained sand, subangular to subrounded; wet sample; contains quartz, feldspar and amphibole; trace cemented sandy clay balls.	190	
195					SANDY CLAY (CL): light olive brown (2.5Y 5/4), 60% clay, no plasticity, hard/dense; 40% fine grained sand, subangular to subrounded; moderate cementation; contains quartz, feldspar and amphibole; some visible alteration.	195	
200					SAND (SP): light olive brown (2.5Y 5/3) and brown (7.5YR 4/4), 100% fine grained sand, subangular to subrounded; trace silt; well sorted; contains quartz, feldspar, mica and amphibole; with visible alteration; transition from olive to brown; laminations.	200	SIEVE
205						205	SS PTS SS
210					SANDY CLAY (CL): strong brown (7.5YR 4/6), 70% clay, hard; 30% fine grained sand, subangular to subrounded; moderate cementation; contains quartz, feldspar, mica and amphibole; rust colored alteration/laminations.	210	
215			Zone #1		CLAY (CL): light yellowish brown (2.5Y 6/3) and olive gray (5Y 4/2), 100% clay; with visible alteration; 1 in. dark reddish gray layer at 212.2 ft.	215	
					SAND (SP): light yellowish brown (2.5Y 6/3), 100% fine to medium grained sand, subangular to rounded; trace fine to coarse gravel up to 48 mm, rounded, at 218 ft; trace clay; poorly sorted; contains quartz, feldspar, mica and amphibole.		

SS: Splitspoon sample GRAB: Grab sample PTS: Splitspoon submitted for analysis SIEVE: Grab sieved by GSSI

Geoscience Support Services, Inc.

*Zone test details are for CX-B2WQ, approximately 60 ft west of CX-B2

GEOSCIENCE
P.O. Box 220
Claremont, CA 91711
Telephone: (909) 451-6650
Fax: (909) 451-6638
www.gssiwater.com

BOREHOLE NAME
CX-B2

BOREHOLE LITHOLOGIC LOG (continued)

CLIENT California American Water
PROJECT NUMBER 13017-13
LOCATION **Marina, CA**

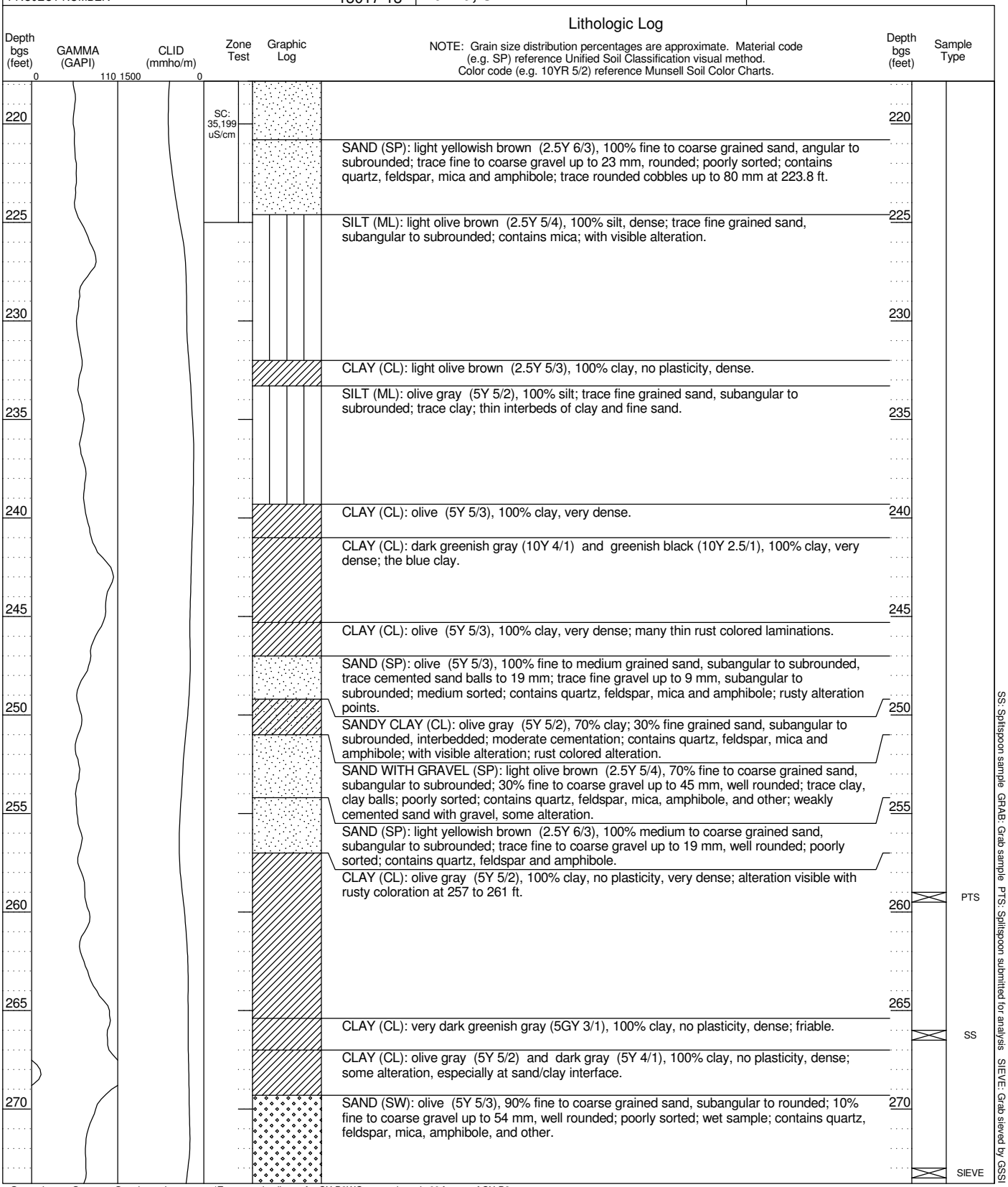

SS: Splitspoon sample GRAB: Grab sample PTS: Splitspoon submitted for analysis SIEVE: Grab sieved by GSSI

*Zone test details are for CX-B2WQ, approximately 60 ft west of CX-B2

GEOSCIENCE
P.O. Box 220
Claremont, CA 91711
Telephone: (909) 451-6650
Fax: (909) 451-6638
www.gssiwater.com

BOREHOLE NAME
CX-B2

BOREHOLE LITHOLOGIC LOG (continued)

CLIENT California American Water
PROJECT NUMBER 13017-13
LOCATION **Marina, CA**

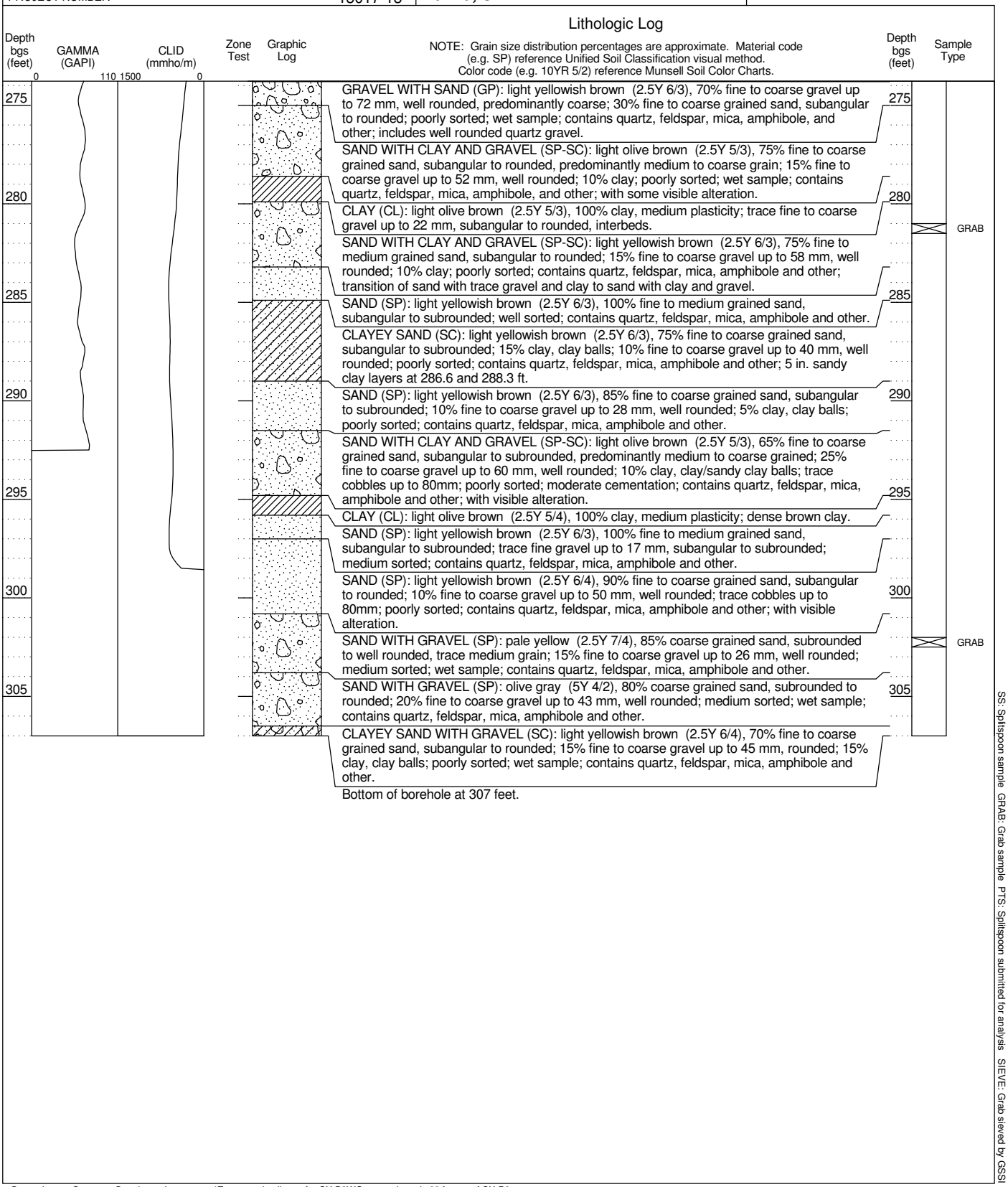

SS: Splitspoon sample GRAB: Grab sample PTS: Splitspoon submitted for analysis SIEVE: Grab sieved by GSSI

*Zone test details are for CX-B2WQ, approximately 60 ft west of CX-B2

GEOSCIENCE
P.O. Box 220
Claremont, CA 91711
Telephone: (909) 451-6650
Fax: (909) 451-6638
www.gssiwater.com

BOREHOLE LITHOLOGIC LOG

BOREHOLE NAME	**CX-B3**						
CLIENT	California American Water	LOCATION	**Marina, CA**				
PROJECT NUMBER	13017-13		**CEMEX Lapis Plant**				
REPORT DATE	5/23/2014		**36° 42' 43.1316", -121° 47' 59.9316"** **Geographic NAD83**				
DRILLING CONTRACTOR	Cascade Drilling	LOGGED BY	**N. Reynolds**				
DRILLER	Jose Munguia						
DRILLING RIG TYPE	Prosonic 600T	DRILLING METHOD	Sonic	START DATE	11/09/13	BOREHOLE DIAMETER	6.25 in
SURFACE ELEVATION	39.0 ft	TOTAL DEPTH	347 ft bgs	FINISH DATE	11/14/13	CORE SIZE	4 in

Lithologic Log

NOTE: Grain size distribution percentages are approximate. Material code (e.g. SP) reference Unified Soil Classification visual method. Color code (e.g. 10YR 5/2) reference Munsell Soil Color Charts.

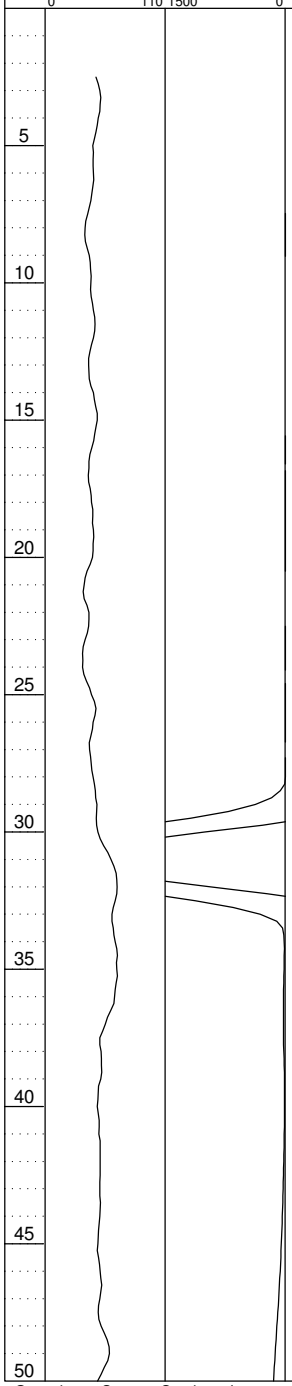

SAND (SP): dark brown (10YR 3/3), 95% fine to medium grained sand, subangular to rounded, predominantly fine grained; 5% silt; medium sorted; contains quartz, feldspar and amphibole; first 7 ft disturbed sample.

SAND (SP): pale yellow (2.5Y 7/4), 100% fine to medium grained sand, subangular to subrounded, predominantly fine grained; medium sorted; contains quartz, feldspar and amphibole.

SAND (SP): light olive brown (2.5Y 5/3), 100% fine to medium grained sand, subangular to rounded, predominantly fine grained; medium sorted; contains quartz, feldspar and amphibole.

SILT WITH SAND (ML): light gray (5Y 7/2), 85% silt; 15% fine grained sand, subrounded; dry sample/powdery.

SAND (SP): pale yellow (2.5Y 7/4), 100% fine grained sand, subangular to subrounded; well sorted; contains quartz, feldspar and amphibole.

SAND (SP): light yellowish brown (2.5Y 6/4), 95% fine to medium grained sand, subangular to subrounded; 5% silt; medium sorted; contains quartz, feldspar and amphibole.

SAND (SP): light olive brown (2.5Y 5/3), 100% fine to medium grained sand, subangular to rounded, predominantly fine grained; medium sorted; contains quartz, feldspar and amphibole.

SILT (ML): light gray (5Y 7/2), 100% silt; trace fine grained sand; dry sample; powdery.

SAND (SP): light yellowish brown (2.5Y 6/4), 100% fine to medium grained sand, subrounded to rounded; medium sorted; contains quartz, feldspar and amphibole.

SAND (SP): light yellowish brown (2.5Y 6/3), 100% fine grained sand, subangular to subrounded, trace medium grained; well sorted; contains quartz, feldspar, mica and amphibole.

Depth bgs (feet) | Sample Type

5 | 10 | 15 | 20 | 25 | 30 | 35 | 40 | 45 | 50

SIEVE

SS: Splitspoon sample GRAB: Grab sample PTS: Splitspoon submitted for analysis SIEVE: Grab sieved by GSSI

Geoscience Support Services, Inc.

GEOSCIENCE
P.O. Box 220
Claremont, CA 91711
Telephone: (909) 451-6650
Fax: (909) 451-6638
www.gssiwater.com

BOREHOLE NAME **CX-B3**

BOREHOLE LITHOLOGIC LOG (continued)

CLIENT California American Water
PROJECT NUMBER 13017-13
LOCATION **Marina, CA**

Lithologic Log

NOTE: Grain size distribution percentages are approximate. Material code (e.g. SP) reference Unified Soil Classification visual method. Color code (e.g. 10YR 5/2) reference Munsell Soil Color Charts.

Depth bgs (feet)	GAMMA (GAPI) 0 110	CLID (mmho/m) 1500 0	Zone Test	Graphic Log	Lithologic Log	Depth bgs (feet)	Sample Type
55					SAND (SW): light yellowish brown (2.5Y 6/4), 100% fine to coarse grained sand, subangular to rounded; poorly sorted; contains quartz, feldspar, mica and amphibole.	55	
					SAND (SP): light olive brown (2.5Y 5/3), 100% fine grained sand, subangular to subrounded; well sorted; contains quartz, feldspar, mica and amphibole.		
60					SAND (SP): light yellowish brown (2.5Y 6/4), 100% fine to medium grained sand, subangular to subrounded, predominantly fine grained; medium sorted; contains quartz, feldspar, mica and amphibole.	60	
					SAND (SP): light yellowish brown (2.5Y 6/3), 100% fine to coarse grained sand, subrounded to rounded, predominantly medium to coarse grained; trace fine gravel up to 15 mm, rounded; poorly sorted; contains quartz, feldspar, mica, amphibole, and other.		
					SAND (SP): light olive brown (2.5Y 5/4), 100% fine grained sand, subangular to subrounded; well sorted; contains quartz, feldspar, mica and amphibole.		
65					SAND (SW): light yellowish brown (2.5Y 6/3), 100% fine to coarse grained sand, subrounded to rounded; trace fine gravel up to 15 mm, rounded; poorly sorted; contains quartz, feldspar, mica, amphibole, and other.	65	
					SAND (SP): light olive brown (2.5Y 5/4), 100% fine grained sand, subangular to subrounded, trace medium grained; medium sorted; contains quartz, feldspar, mica and amphibole; higher mica content.		
70					SAND (SP): light olive brown (2.5Y 5/3), 95% fine grained sand, subrounded, very fine grained; 5% silt; well sorted; contains quartz, feldspar, mica and amphibole; higher mica content.	70	
75						75	
80						80	
							GRAB
85						85	
90					SAND (SP): olive yellow (2.5Y 6/6), 95% fine to medium grained sand, subrounded to rounded; 5% silt; poorly sorted; contains quartz, feldspar, mica, amphibole, and other.	90	
95					SAND WITH GRAVEL (SP): light yellowish brown (2.5Y 6/4), 75% medium to coarse grained sand, subrounded to rounded, trace fine grained; 20% fine to coarse gravel up to 32 mm, rounded; 5% clay, sandy clay balls; poorly sorted; contains quartz, feldspar, mica, amphibole, and other.	95	
					SAND WITH SILT (SP-SM): light yellowish brown (2.5Y 6/4), 90% fine grained sand, subangular to subrounded; 10% silt, silty sand balls; well sorted; contains quartz, feldspar, mica and amphibole; with visible alteration.		
100					GRAVEL WITH SAND (GP): light yellowish brown (2.5Y 6/4), 60% fine to coarse gravel up to 48 mm, rounded; 40% medium to coarse grained sand, subrounded to rounded; poorly sorted; contains quartz, feldspar, mica, amphibole, and other.	100	
					SAND (SW): light yellowish brown (2.5Y 6/4), 100% fine to coarse grained sand, subrounded to rounded; trace fine gravel up to 10 mm, subrounded; poorly sorted; contains quartz, feldspar, mica, amphibole, and other.		
							GRAB
105					SAND (SP): light olive brown (2.5Y 5/4), 100% fine grained sand, subangular to subrounded; well sorted; contains quartz, feldspar, mica, amphibole, and other, with some	105	

SS: Splitspoon sample GRAB: Grab sample PTS: Splitspoon submitted for analysis SIEVE: Grab sieved by GSSI

GEOSCIENCE
P.O. Box 220
Claremont, CA 91711
Telephone: (909) 451-6650
Fax: (909) 451-6638
www.gssiwater.com

BOREHOLE LITHOLOGIC LOG (continued)

BOREHOLE NAME	CLIENT	PROJECT NUMBER	LOCATION
CX-B3	California American Water	13017-13	**Marina, CA**

Lithologic Log

NOTE: Grain size distribution percentages are approximate. Material code (e.g. SP) reference Unified Soil Classification visual method. Color code (e.g. 10YR 5/2) reference Munsell Soil Color Charts.

Depth bgs (feet)	Lithologic Description	Depth bgs (feet)	Sample Type
	visible alteration.		
	SAND WITH GRAVEL (SP): light yellowish brown (2.5Y 6/4), 80% fine to coarse grained sand, subangular to rounded, predominantly medium to coarse grained; 20% fine to coarse gravel up to 58 mm, subrounded to rounded; trace clay; poorly sorted; contains quartz, feldspar, mica, amphibole, and other.		SS, PTS, SS
110		110	
115	SILTY SAND (SM): light olive brown (2.5Y 5/3), 85% fine grained sand, subrounded, very fine grained; 15% silt; well sorted; contains quartz, feldspar, mica and amphibole.	115	
120		120	SIEVE
125		125	
	SAND WITH SILT AND GRAVEL (SP-SM): light olive brown (2.5Y 5/3), 75% fine grained sand, subrounded; 15% fine to coarse gravel up to 27 mm, rounded, multi-colored; 10% silt; well sorted; contains quartz, feldspar, mica and amphibole; with visible alteration.		
	SILTY SAND (SM): light olive brown (2.5Y 5/3), 85% fine grained sand, subrounded, very fine grained; 15% silt; well sorted; contains quartz, feldspar, mica and amphibole.		
130	FAT CLAY (CH): dark gray (5Y 4/1), 100% clay, medium plasticity, dense/hard.	130	PTS
	SILT (ML): pale olive (5Y 6/3), 100% silt, dense; visible alteration/rust colored laminations.		
	SAND (SP): light olive brown (2.5Y 5/4), 100% fine grained sand, subrounded, very fine grained; well sorted; contains quartz, feldspar, mica and amphibole; with visible alteration.		
	SILT (ML): olive gray (5Y 5/2), 100% silt; with visible alteration.		
135	SAND (SP): light yellowish brown (2.5Y 6/4), 95% fine to medium grained sand, subangular to subrounded, grades to predominantly medium grained sand at 135 ft; 5% silt; poorly sorted; contains quartz, feldspar, mica and amphibole.	135	
	SILT (ML): olive (5Y 5/3), 100% silt; visible alteration/rust colored laminations.		
140	SAND (SP): pale olive (5Y 6/3), 100% fine to medium grained sand, subangular to subrounded, predominantly medium grained; medium sorted.	140	
145	CLAYEY SAND (SC): pale olive (5Y 6/3), 70% fine to coarse grained sand, subangular to rounded; 20% clay; 10% fine to coarse gravel up to 40 mm, well rounded, especially at 144.5 to 145 ft; poorly sorted; contains quartz, feldspar, mica, amphibole, and other, visible rust colored alteration.	145	
	FAT CLAY (CH): pale olive (5Y 6/3), 100% clay, dense; medium plasticity.		
150	CLAYEY SAND (SC): pale olive (5Y 6/3), 70% fine to coarse grained sand, subrounded to rounded; 30% clay; trace fine to coarse gravel up to 25 mm, subangular; poorly sorted; with visible alteration; contains quartz, feldspar, amphibole, and other.	150	
	SANDY FAT CLAY (CH): pale olive (5Y 6/3), 70% clay, medium plasticity; 30% fine to medium grained sand, subangular to subrounded; contains quartz, feldspar, amphibole, and other; some visible alteration with rusty coloration.		
155	FAT CLAY (CH): pale olive (5Y 6/3), 100% clay, medium plasticity; visible alteration/rust colored laminations.	155	
	SILTY SAND (SM): pale olive (5Y 6/3), 85% fine grained sand, subrounded to rounded; 15% silt; well sorted; contains quartz, feldspar and amphibole.		
	FAT CLAY (CH): olive (5Y 5/3), 100% clay, low plasticity; trace fine grained sand, subangular to subrounded; some rust colored alterations.		
160	SAND WITH SILT (SP-SM): pale olive (5Y 6/3), 90% fine grained sand, subangular to subrounded, altered sand layers, rust and white coloration; 10% silt; trace fine to coarse gravel up to 38 mm, rounded; trace clay, clay balls; well sorted; contains quartz, feldspar, mica, amphibole, and other.	160	

SS: Splitspoon sample GRAB: Grab sample PTS: Splitspoon submitted for analysis SIEVE: Grab sieved by GSSI

GEOSCIENCE
P.O. Box 220
Claremont, CA 91711
Telephone: (909) 451-6650
Fax: (909) 451-6638
www.gssiwater.com

BOREHOLE NAME **CX-B3**

BOREHOLE LITHOLOGIC LOG (continued)

CLIENT California American Water
PROJECT NUMBER 13017-13
LOCATION **Marina, CA**

Lithologic Log

Depth bgs (feet) | GAMMA (GAPI) 0 110 | CLID (mmho/m) 1500 0 | Zone Test | Graphic Log

NOTE: Grain size distribution percentages are approximate. Material code (e.g. SP) reference Unified Soil Classification visual method. Color code (e.g. 10YR 5/2) reference Munsell Soil Color Charts.

Depth bgs (feet)	Lithologic Log	Depth bgs (feet)	Sample Type
165	SAND WITH CLAY AND GRAVEL (SW-SC): yellowish brown (10YR 5/4), 75% fine to coarse grained sand, subangular to rounded; 15% fine to coarse gravel up to 68 mm, rounded; 10% clay; poorly sorted; contains quartz, feldspar and amphibole; visible alteration of sands.	165	
	SAND (SP): strong brown (7.5YR 5/8), 85% medium to coarse grained sand, subrounded to rounded, predominantly coarse grained; 10% fine to coarse gravel up to 28 mm, rounded; 5% clay; poorly sorted; contains quartz, feldspar, amphibole, and other; bright rust colored alteration.		
170	SAND WITH CLAY AND GRAVEL (SP-SC): pale olive (5Y 6/3), 75% medium to coarse grained sand, subangular to rounded; 15% fine to coarse gravel up to 36 mm, rounded; 10% clay; poorly sorted; contains quartz, feldspar, amphibole, and other; contains altered sands.	170	
	CLAY (CL): light yellowish brown (2.5Y 6/4), 95% clay, low plasticity; 5% fine to coarse gravel up to 42 mm, subrounded to rounded, interbedded; trace medium grained sand, subrounded to rounded.		
175	SAND (SP): pale olive (5Y 6/3), 100% fine to medium grained sand, subangular to subrounded; trace fine to coarse gravel up to 40 mm, subrounded to rounded; trace clay; poorly sorted; contains quartz, feldspar, amphibole, and other, with visible alteration; trace weakly cemented sands.	175	
	CLAY WITH GRAVEL (CL): pale olive (5Y 6/3), 85% clay; 10% fine to coarse gravel up to 50 mm, subangular to rounded; 5% fine grained sand, subangular to subrounded; fine sand alteration of minerals/rock.		SS
	CLAYEY SAND WITH GRAVEL (SC): pale olive (5Y 6/3), 70% fine to coarse grained sand, subangular to subrounded; 15% fine to coarse gravel up to 75 mm, rounded; 15% clay, clay balls; poorly sorted; well graded; contains quartz, feldspar, amphibole, and other; visible alteration of minerals/rock.		PTS SS
180	SANDY CLAY (CL): pale olive (5Y 6/3), 70% clay; 25% fine to coarse grained sand, subangular to subrounded; 5% fine to coarse gravel up to 25 mm, subrounded to rounded; contains quartz, feldspar, amphibole, and other, visible alteration with rusty coloration.	180	
	CLAYEY SAND WITH GRAVEL (SC): pale olive (5Y 6/3), 70% fine to coarse grained sand, subangular to subrounded; 15% fine to coarse gravel up to 33 mm, subrounded to rounded; 15% clay; poorly sorted; well graded; contains quartz, feldspar, amphibole, and other; moderately cemented sand layer at 178.2-178.7 ft.		
185	GRAVELLY SILT (ML): light yellowish brown (2.5Y 6/3), 60% silt; 30% fine to coarse gravel up to 70 mm, rounded, coarse grained at 179.6 ft; 10% fine grained sand, subangular to subrounded; moderately cemented sand and gravel layer at 180.8-181.8 ft; contains quartz, feldspar, amphibole, and other.	185	
	SAND (SP): light yellowish brown (2.5Y 6/4), 100% fine to medium grained sand, subangular to subrounded, predominantly medium grained; trace fine gravel up to 18 mm, rounded; trace clay, clay lens; medium sorted; contains quartz, feldspar, amphibole, and other; rust colored alteration of sands at 186.8 to 187.3 ft.		
190	CLAY (CL): olive (5Y 5/3), 100% clay, low plasticity; trace fine grained sand, subangular to subrounded; some alteration visible with rusty coloration.	190	
	SANDY CLAY (CL): pale olive (5Y 6/3), 70% clay, low plasticity; 30% fine to coarse grained sand, subangular to subrounded; trace fine to coarse gravel up to 30 mm, subangular to subrounded; contains quartz, feldspar, mica, amphibole, and other, with visible alteration.		
195	CLAY (CL): olive (5Y 5/3), 100% clay, low plasticity, dense; with visible rust colored alteration.	195	SS PTS
	SAND (SP): yellowish brown (10YR 5/4), 95% fine grained sand, subangular to subrounded; 5% silt; well sorted; contains quartz, feldspar and amphibole.		
200	SAND (SP): dark yellowish brown (10YR 4/4), 95% fine grained sand, subangular to subrounded; 5% silt; well sorted; contains quartz, feldspar and amphibole.	200	
			GRAB
205	SAND (SP): brown (7.5YR 4/3), 95% fine grained sand, subangular to subrounded; 5% silt; well sorted; contains quartz, feldspar and amphibole.	205	
210	SAND (SP): dark brown (10YR 3/3), 95% fine grained sand, subangular to subrounded; 5% silt; well sorted; contains quartz, feldspar and amphibole.	210	
215		215	
	SAND (SP): dark grayish brown (10YR 4/2), 95% fine grained sand, subangular to		

SS: Splitspoon sample GRAB: Grab sample PTS: Splitspoon submitted for analysis SIEVE: Grab sieved by GSSI

Geoscience Support Services, Inc.

GEOSCIENCE
P.O. Box 220
Claremont, CA 91711
Telephone: (909) 451-6650
Fax: (909) 451-6638
www.gssiwater.com

BOREHOLE NAME **CX-B3**

BOREHOLE LITHOLOGIC LOG (continued)

CLIENT California American Water
PROJECT NUMBER 13017-13
LOCATION **Marina, CA**

Lithologic Log

NOTE: Grain size distribution percentages are approximate. Material code (e.g. SP) reference Unified Soil Classification visual method. Color code (e.g. 10YR 5/2) reference Munsell Soil Color Charts.

Depth bgs (feet)	GAMMA (GAPI) 0 110	CLID (mmho/m) 1500 0	Zone Test	Graphic Log	Lithologic Log	Depth bgs (feet)	Sample Type
					subrounded; 5% silt; well sorted; contains quartz, feldspar and amphibole; with some visible alteration; cementation at 219 and 224 ft.		
220						220	
225					SILT (ML): dark brown (10YR 3/3), 95% silt; 5% fine grained sand, subangular to subrounded.	225	
					CLAY (CL): olive (5Y 5/3), 100% clay, no plasticity, dense; alteration visible with rust colored laminations below 230 ft.		
230						230	
					SAND (SP): pale olive (5Y 6/3), 90% fine to coarse grained sand, subangular to subrounded, predominantly medium grained; 10% fine to coarse gravel up to 70 mm, rounded, interbedded; poorly sorted; contains quartz, feldspar, mica and amphibole; gravel layers at 237, 237.8, and 238.6 to 239.7 ft.		
235						235	
240						240	SIEVE
					SAND WITH GRAVEL (SW): pale olive (5Y 6/3), 85% fine to coarse grained sand, subangular to rounded; 15% fine to coarse gravel up to 68 mm, rounded; poorly sorted; contains quartz, feldspar, mica, amphibole, and other; with visible alteration.		
245					SAND (SP): dark grayish brown (2.5Y 4/2), 100% fine grained sand, subrounded; trace silt, cemented brown silt at 246.6 ft; well sorted; contains quartz, feldspar, amphibole, and other.	245	
					SANDY SILT (ML): olive (5Y 5/3), 70% silt; 30% fine grained sand, subangular to subrounded; with some visible rust colored alteration.		
250					SAND (SW): pale olive (5Y 6/3), 85% fine to coarse grained sand, subangular to subrounded; 10% fine to coarse gravel up to 42 mm, rounded; 5% clay; poorly sorted; contains quartz, feldspar, mica, amphibole, and other; with some visible alteration; thin sandy clay layers.	250	
255						255	GRAB
					FAT CLAY (CH): pale olive (5Y 6/3), 100% clay, low plasticity, very dense; some darker fine laminations.		
260						260	
					SILT (ML): pale olive (5Y 6/3), 100% silt; trace fine grained sand, subangular to subrounded; trace clay; silt with fine sand and altered sand and trace clay clasts from 262.8 to 263.9 ft; high mica content.		
265					SAND (SP): olive (5Y 5/3), 100% fine to medium grained sand, subangular to subrounded; trace fine to coarse gravel up to 33 mm, rounded; medium sorted; contains quartz, feldspar, mica, amphibole, and other; visible rust colored alteration of sands at 268.5 ft(3in.).	265	
					SAND (SP): pale olive (5Y 6/3), 90% medium to coarse grained sand, subangular to subrounded; 10% fine to coarse gravel up to 50 mm, rounded; poorly sorted; contains quartz, feldspar, mica, amphibole, and other.		
270						270	
							GRAB

SS: Splitspoon sample GRAB: Grab sample PTS: Splitspoon submitted for analysis SIEVE: Grab sieved by GSSI

GEOSCIENCE
P.O. Box 220
Claremont, CA 91711
Telephone: (909) 451-6650
Fax: (909) 451-6638
www.gssiwater.com

BOREHOLE LITHOLOGIC LOG (continued)

BOREHOLE NAME	CLIENT	PROJECT NUMBER	LOCATION
CX-B3	California American Water	13017-13	**Marina, CA**

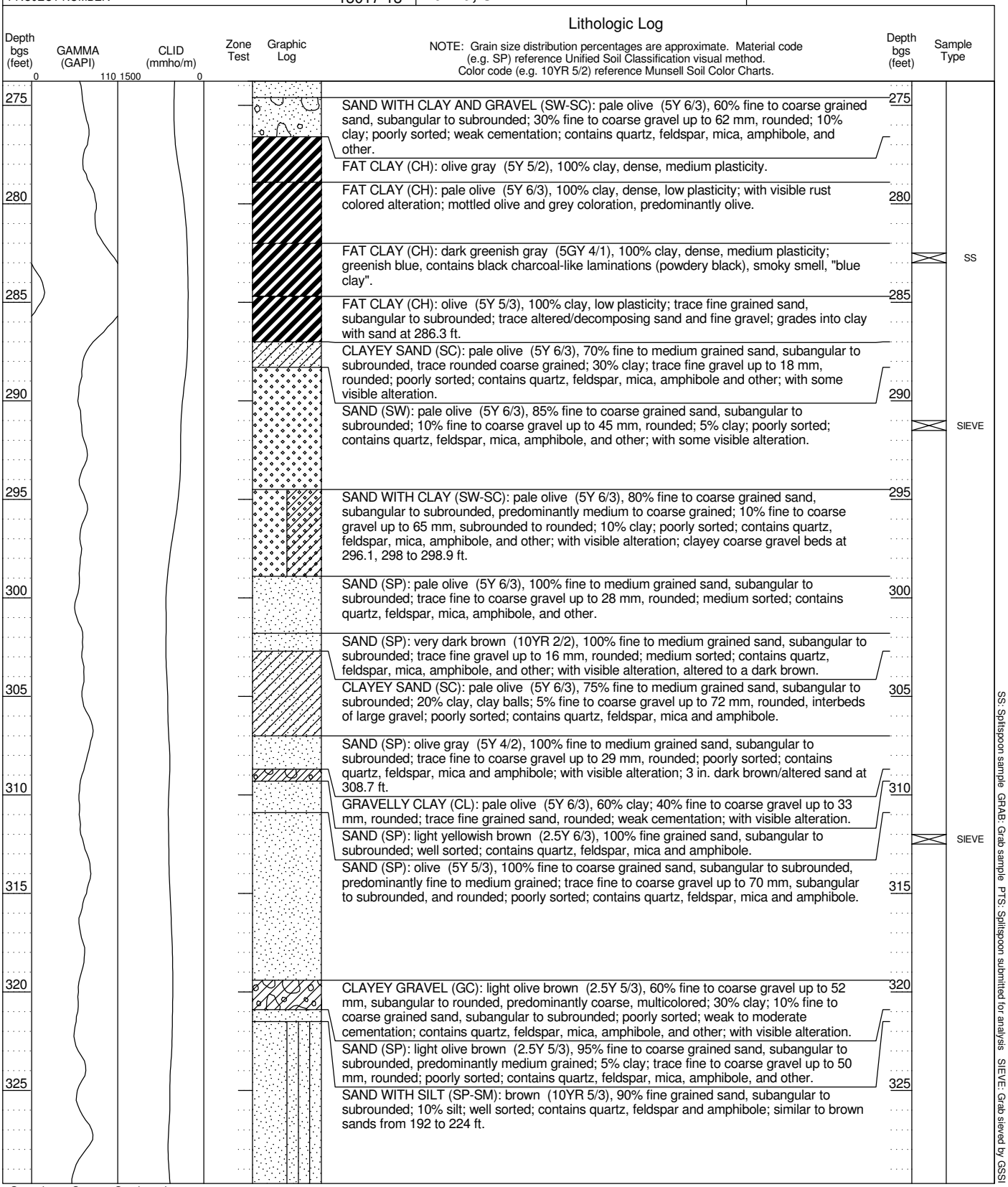

GEOSCIENCE
P.O. Box 220
Claremont, CA 91711
Telephone: (909) 451-6650
Fax: (909) 451-6638
www.gssiwater.com

BOREHOLE NAME
CX-B3

BOREHOLE LITHOLOGIC LOG (continued)

CLIENT California American Water
PROJECT NUMBER 13017-13
LOCATION **Marina, CA**

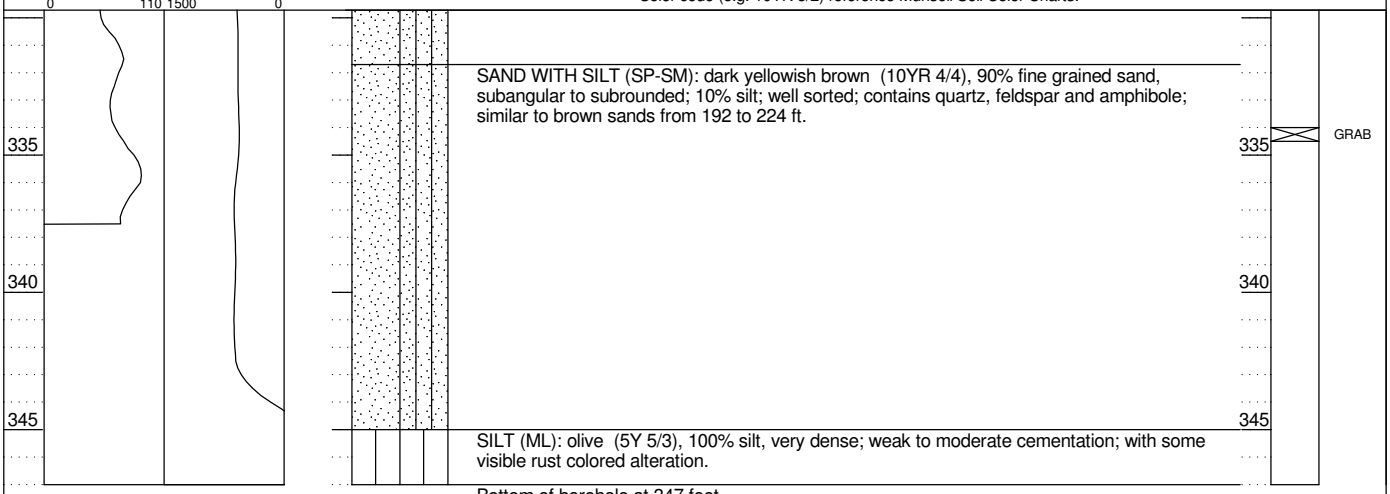

SS: Splitspoon sample GRAB: Grab sample PTS: Splitspoon submitted for analysis SIEVE: Grab sieved by GSSI

GEOSCIENCE
P.O. Box 220
Claremont, CA 91711
Telephone: (909) 451-6650
Fax: (909) 451-6638
www.gssiwater.com

BOREHOLE LITHOLOGIC LOG

BOREHOLE NAME **CX-B4**					
CLIENT	California American Water	LOCATION **Marina, CA**			
PROJECT NUMBER	13017-13	**CEMEX Lapis Plant**			
REPORT DATE	5/23/2014	**36° 42' 42.1848", -121° 47' 55.2192"** **Geographic NAD83**			
DRILLING CONTRACTOR	Cascade Drilling	LOGGED BY			
DRILLER	Jose Munguia	**N. Reynolds**			
DRILLING RIG TYPE	Prosonic 600T	DRILLING METHOD	Sonic	START DATE	3/20/14
BOREHOLE DIAMETER	8 in	SURFACE ELEVATION	39.0 ft	TOTAL DEPTH	350 ft bgs
FINISH DATE	4/10/14	CORE SIZE	6 in		

Lithologic Log

NOTE: Grain size distribution percentages are approximate. Material code (e.g. SP) reference Unified Soil Classification visual method. Color code (e.g. 10YR 5/2) reference Munsell Soil Color Charts.

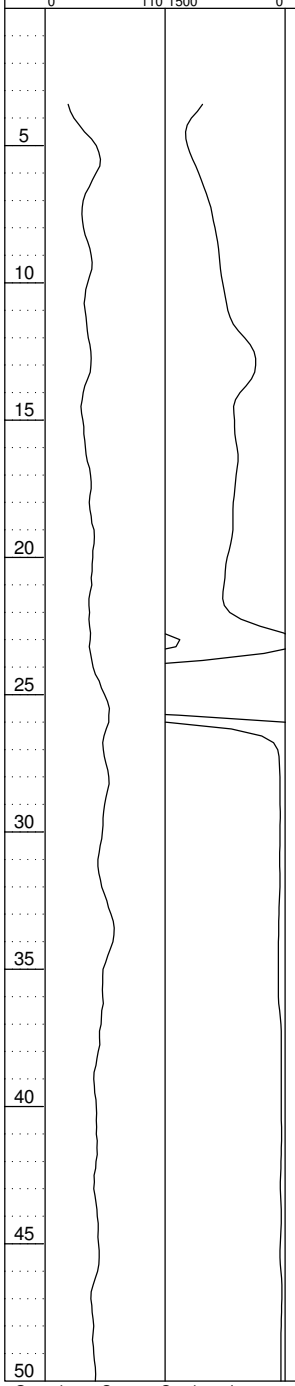

SAND WITH GRAVEL (SP): light olive brown (2.5Y 5/3) and pale yellow (2.5Y 7/3), 65% fine to medium grained sand, subangular to rounded; 30% fine to coarse gravel up to 70 mm, subangular to rounded; 5% silt; medium sorted; contains quartz, feldspar and amphibole; trace cobbles; trace organics/roots.

SAND (SP): very dark grayish brown (10YR 3/2), 95% fine grained sand, subrounded to rounded; 5% silt; trace fine to coarse gravel up to 52 mm, subrounded to rounded, at 8.5 ft bgs; well sorted; contains quartz, feldspar, amphibole and other.

SAND (SP): pale yellow (5Y 7/4), 100% fine to medium grained sand, subangular to subrounded; trace silt, trace silt balls; medium sorted; contains quartz, feldspar, amphibole and other.

SAND (SP): olive gray (5Y 4/2), 100% fine to medium grained sand, subangular to rounded; medium sorted; contains quartz, feldspar, amphibole and other.

SAND (SP): pale yellow (5Y 7/4), 100% fine to medium grained sand, subangular to subrounded; medium sorted; contains quartz, feldspar, amphibole and other.

SAND (SP): light olive brown (2.5Y 5/3), 100% fine to medium grained sand, subangular to subrounded; medium sorted; contains quartz, feldspar, amphibole and other.

SAND (SP): light olive brown (2.5Y 5/4), 95% fine grained sand, subangular to subrounded; 5% silt, gray silt pieces; well sorted; contains quartz, feldspar, mica and amphibole.

SAND (SP): light yellowish brown (2.5Y 6/4), 100% fine to medium grained sand, subangular to subrounded; medium sorted; contains quartz, feldspar, amphibole and other.

SAND (SP): light yellowish brown (2.5Y 6/3), 100% medium grained sand, subangular to subrounded, trace fine grained; trace silt; medium sorted; contains quartz, feldspar, mica, amphibole and other; trace weakly cemented olive silty sand layer from 37.5 to 37.8 ft bgs; coarser than above.

SAND (SP): light yellowish brown (2.5Y 6/3), 100% fine grained sand, subangular to subrounded; trace silt; well sorted; contains quartz, feldspar, mica and amphibole; trace thin olive/gray horizontal silt lenses at 42.1 ft bgs.

SAND (SP): light yellowish brown (2.5Y 6/4), 100% fine to medium grained sand, subangular, predominantly medium grained, trace coarse grained; trace fine gravel up to 10 mm, subrounded; medium sorted; contains quartz, feldspar, mica, amphibole and other.

Depth bgs (feet) | Sample Type

5 | 10 | 15 | 20 | 25 GRAB | 30 | 35 | 40 | 45 SIEVE | 50

SS: Splitspoon sample GRAB: Grab sample PTS: Splitspoon submitted for analysis SIEVE: Grab sieved by GSSI

Geoscience Support Services, Inc.

GEOSCIENCE
P.O. Box 220
Claremont, CA 91711
Telephone: (909) 451-6650
Fax: (909) 451-6638
www.gssiwater.com

BOREHOLE LITHOLOGIC LOG (continued)

BOREHOLE NAME	CLIENT	PROJECT NUMBER	LOCATION
CX-B4	California American Water	13017-13	**Marina, CA**

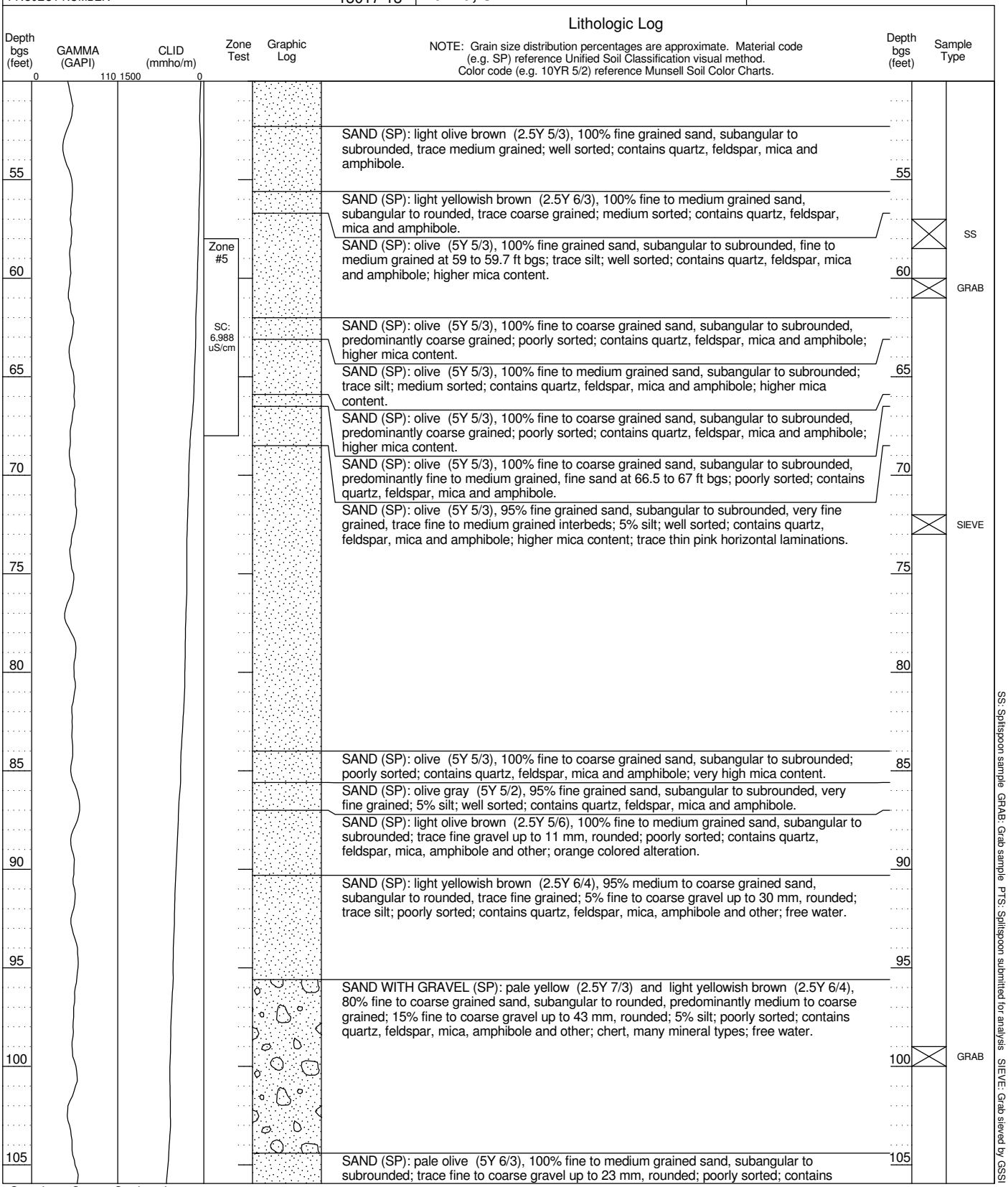

SS: Splitspoon sample GRAB: Grab sample PTS: Splitspoon submitted for analysis SIEVE: Grab sieved by GSSI

GEOSCIENCE
P.O. Box 220
Claremont, CA 91711
Telephone: (909) 451-6650
Fax: (909) 451-6638
www.gssiwater.com

BOREHOLE LITHOLOGIC LOG (continued)

BOREHOLE NAME	CLIENT	PROJECT NUMBER	LOCATION
CX-B4	California American Water	13017-13	**Marina, CA**

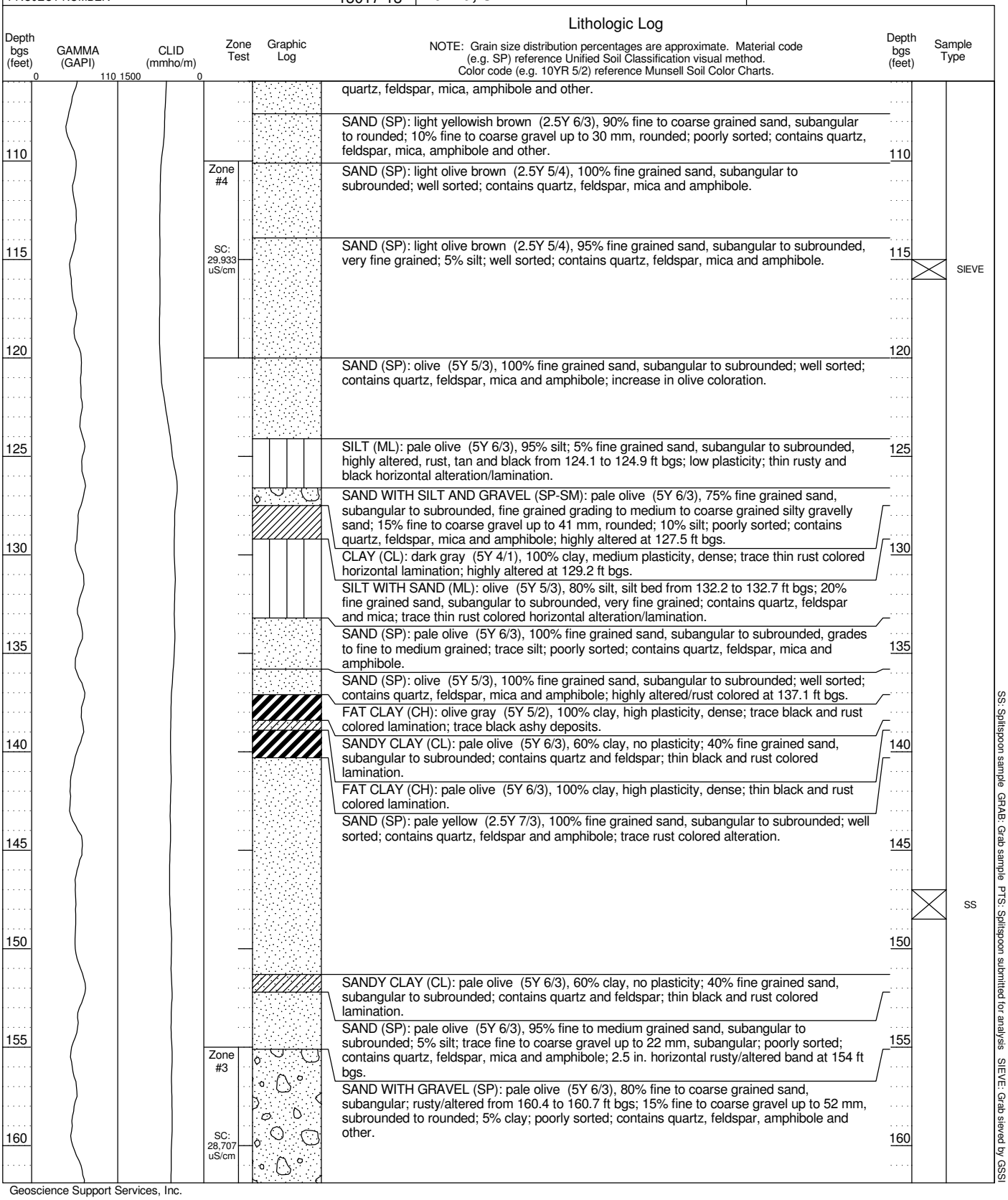

Geoscience Support Services, Inc.

GEOSCIENCE
P.O. Box 220
Claremont, CA 91711
Telephone: (909) 451-6650
Fax: (909) 451-6638
www.gssiwater.com

BOREHOLE NAME **CX-B4**

BOREHOLE LITHOLOGIC LOG (continued)

CLIENT California American Water
PROJECT NUMBER 13017-13
LOCATION **Marina, CA**

Lithologic Log

Depth bgs (feet)	GAMMA (GAPI) 0 110	CLID (mmho/m) 1500 0	Zone Test	Graphic Log	NOTE: Grain size distribution percentages are approximate. Material code (e.g. SP) reference Unified Soil Classification visual method. Color code (e.g. 10YR 5/2) reference Munsell Soil Color Charts.	Depth bgs (feet)	Sample Type
165					GRAVEL WITH CLAY AND SAND (GP-GC): pale olive (5Y 6/3), 60% fine to coarse gravel up to 60 mm, subrounded to rounded; 30% medium to coarse grained sand, subangular; 10% clay; trace cobbles; poorly sorted; contains quartz, feldspar, amphibole and other; trace round cobbles up to 85 mm at 163 to 166 ft bgs; many mineral types; trace rusty alteration.	165	GRAB
170					SILT (ML): olive (5Y 5/3), 100% silt, very dense; friable; rust colored alteration and lamination.	170	
175					SILTY SAND (SM): pale olive (5Y 6/3), 85% fine grained sand, subangular to subrounded; 15% silt, from 177.3 to 177.6 ft bgs; no plasticity; well sorted; contains quartz, feldspar and amphibole.	175	
180					SAND (SP): light olive gray (5Y 6/2), 100% fine grained sand, subangular to subrounded, grades to fine to medium grained; trace fine gravel up to 18 mm, rounded; well sorted; contains quartz, feldspar, mica and amphibole; rusty alteration at 177.6 ft bgs.	180	
185					CLAY WITH SAND (CL): pale olive (5Y 6/3), 85% clay, low plasticity; 10% fine to medium grained sand, subangular to subrounded; 5% fine to coarse gravel up to 36 mm, rounded; contains quartz, mica and amphibole; clay with sand and gravel interbeds; weakly cemented clay and gravel at 183.5 ft bgs; trace rusty alteration/nodules.	185	
					SAND (SP): olive gray (5Y 5/2), 100% fine to medium grained sand, subangular to subrounded; medium sorted; contains quartz, feldspar, mica and amphibole.		
190					SAND (SP): yellowish brown (10YR 5/6), 100% fine grained sand, subangular to subrounded; well sorted; contains quartz, feldspar and amphibole; start of "the brown sand".	190	SIEVE
195					SAND (SP): dark yellowish brown (10YR 4/6), 100% fine grained sand, subangular to subrounded; well sorted; contains quartz, feldspar and amphibole; redder coloration than above.	195	
200					SAND (SP): dark yellowish brown (10YR 3/4), 95% fine grained sand, subangular to subrounded; 5% silt; well sorted; contains quartz, feldspar and amphibole; trace weakly cemented sands and sand nodules; mottled coloration.	200	
205					SAND (SP): brown (10YR 4/3), 100% fine grained sand, subangular to subrounded; well sorted; contains quartz, feldspar and amphibole.	205	
210					SAND (SP): strong brown (7.5YR 4/6), 100% fine grained sand, subangular to subrounded; well sorted; contains quartz, feldspar and amphibole; faint thin rusty horizontal lamination; more red.	210	GRAB
215						215	

SS: Splitspoon sample GRAB: Grab sample PTS: Splitspoon submitted for analysis SIEVE: Grab sieved by GSSI

GEOSCIENCE
P.O. Box 220
Claremont, CA 91711
Telephone: (909) 451-6650
Fax: (909) 451-6638
www.gssiwater.com

BOREHOLE LITHOLOGIC LOG (continued)

BOREHOLE NAME	CLIENT	PROJECT NUMBER	LOCATION
CX-B4	California American Water	13017-13	**Marina, CA**

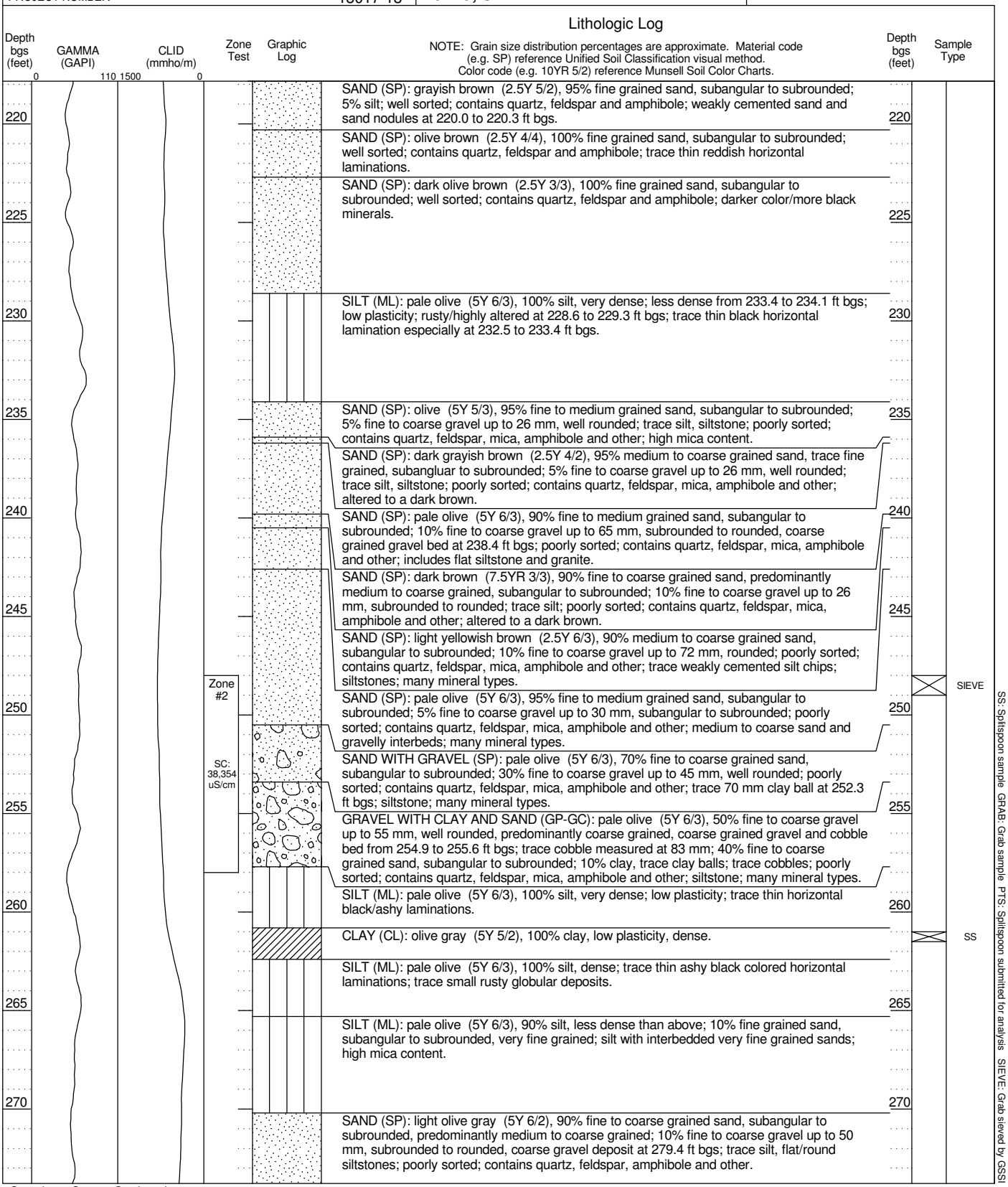

SS: Splitspoon sample GRAB: Grab sample PTS: Splitspoon submitted for analysis SIEVE: Grab sieved by GSSI

GEOSCIENCE
P.O. Box 220
Claremont, CA 91711
Telephone: (909) 451-6650
Fax: (909) 451-6638
www.gssiwater.com

BOREHOLE LITHOLOGIC LOG (continued)

BOREHOLE NAME	CLIENT	LOCATION
CX-B4	California American Water	**Marina, CA**
	PROJECT NUMBER 13017-13	

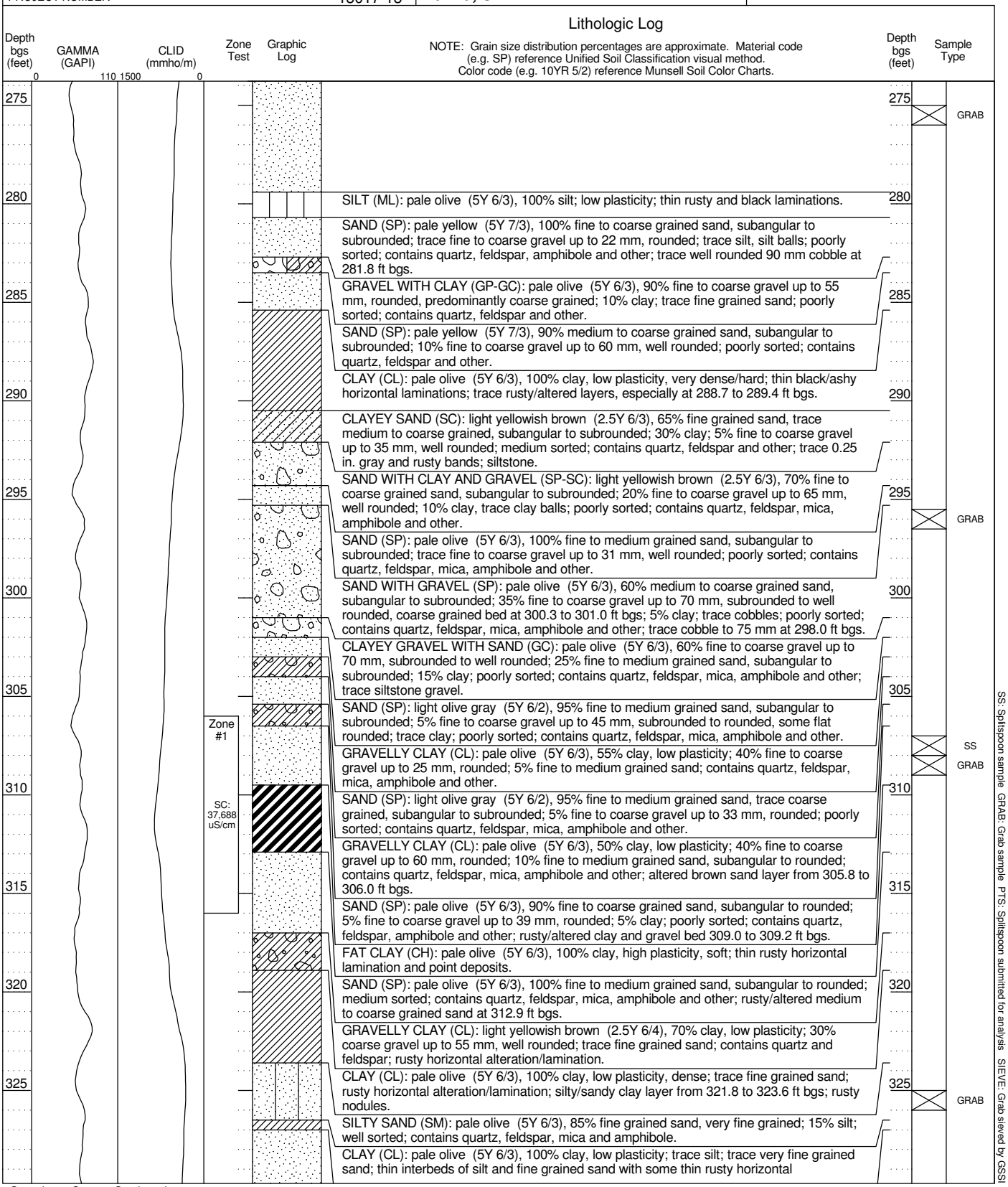

SS: Splitspoon sample GRAB: Grab sample PTS: Splitspoon submitted for analysis SIEVE: Grab sieved by GSSI

GEOSCIENCE
P.O. Box 220
Claremont, CA 91711
Telephone: (909) 451-6650
Fax: (909) 451-6638
www.gssiwater.com

BOREHOLE NAME **CX-B4**

BOREHOLE LITHOLOGIC LOG (continued)

CLIENT California American Water
PROJECT NUMBER 13017-13
LOCATION **Marina, CA**

Lithologic Log

Depth bgs (feet)	GAMMA (GAPI) 0 110	CLID (mmho/m) 1500 0	Zone Test	Graphic Log	NOTE: Grain size distribution percentages are approximate. Material code (e.g. SP) reference Unified Soil Classification visual method. Color code (e.g. 10YR 5/2) reference Munsell Soil Color Charts.	Depth bgs (feet)	Sample Type
					lamination/alteration.		
					SAND (SP): pale olive (5Y 6/3), 100% fine grained sand, subangular to subrounded, trace clay pods; well sorted; contains quartz, feldspar, mica and amphibole; higher mica content; more black minerals.		
335					CLAY (CL): olive gray (5Y 5/2), 70% clay, medium plasticity; 30% silt; trace fine grained sand; clay with 2 to 3 in. silt/fine grained sand with thin rusty horizontal lamination/alteration.	335	
					FAT CLAY (CH): light olive gray (5Y 6/2), 100% clay, medium plasticity.		
340					SAND (SP): brown (10YR 4/3), 100% fine grained sand, subangular to subrounded; trace silt; well sorted; contains quartz, feldspar and amphibole; weakly cemented, especially near rusty horizontal laminations; start of the second "brown sand" layer, similar to sand at 187.6 ft bgs.	340	
345					SAND (SP): brown (10YR 5/3), 100% fine grained sand, subangular to subrounded; well sorted; contains quartz, feldspar and amphibole; less red, more gray-brown.	345	
350					SAND (SP): brown (10YR 4/3), 100% fine grained sand, subangular to subrounded; trace silt; well sorted; contains quartz, feldspar and amphibole; faint thin rusty horizontal laminations; weak to moderately cemented below 348.3 ft bgs, especially in areas of rusty alteration; more red; moderately cemented at 350 ft bgs.	350	GRAB
					Bottom of borehole at 350 feet.		

SS: Splitspoon sample GRAB: Grab sample PTS: Splitspoon submitted for analysis SIEVE: Grab sieved by GSSI

GEOSCIENCE
P.O. Box 220
Claremont, CA 91711
Telephone: (909) 451-6650
Fax: (909) 451-6638
www.gssiwater.com

BOREHOLE LITHOLOGIC LOG

BOREHOLE NAME **MDW-1**					
CLIENT	California American Water	LOCATION **Castroville, CA** **Salinas River State Beach** **36° 46' 32.3688", -121° 47' 41.4816"** **Geographic NAD83**			
PROJECT NUMBER	13017-13				
REPORT DATE	5/23/2014				
DRILLING CONTRACTOR	Cascade Drilling	LOGGED BY **N. Reynolds**			
DRILLER	Jose Munguia				
DRILLING RIG TYPE	Prosonic 600T	DRILLING METHOD	Sonic	START DATE	4/23/14
BOREHOLE DIAMETER	8 in				
SURFACE ELEVATION	20.0 ft	TOTAL DEPTH	300 ft bgs	FINISH DATE	4/27/14
CORE SIZE	6 in				

Lithologic Log

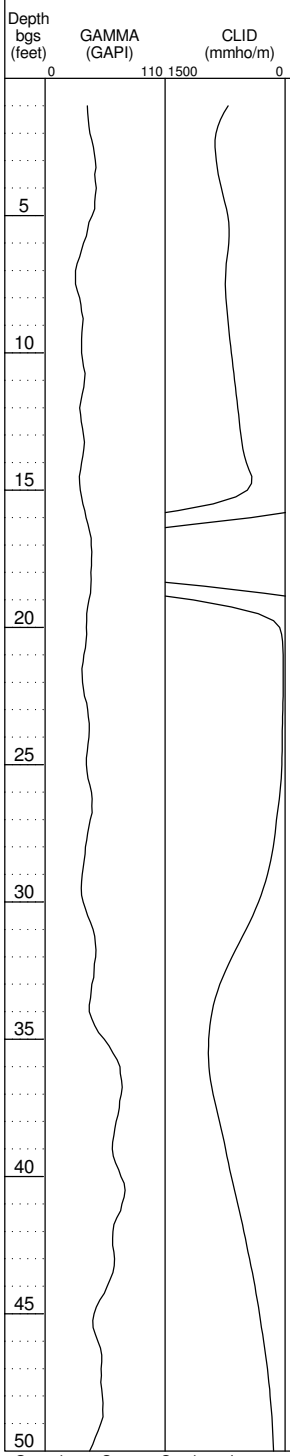

NOTE: Grain size distribution percentages are approximate. Material code (e.g. SP) reference Unified Soil Classification visual method. Color code (e.g. 10YR 5/2) reference Munsell Soil Color Charts.

Depth bgs (feet)	Description	Sample Type
	NO SAMPLE: asphalt.	
	NO SAMPLE: gravel road base.	
	SAND (SP): dark grayish brown (2.5Y 4/2), 100% fine grained sand, subangular to subrounded; well sorted; contains quartz, feldspar and amphibole.	
5	SAND (SP): light yellowish brown (2.5Y 6/3), 100% fine grained sand, subangular to subrounded; well sorted; contains quartz, feldspar and amphibole.	
	SAND (SP): very dark grayish brown (2.5Y 3/2), 100% fine grained sand, subangular to subrounded; well sorted; contains quartz, feldspar and amphibole.	
10		
15	SAND (SP): light olive brown (2.5Y 5/3), 100% fine grained sand, subangular to subrounded; well sorted; contains quartz, feldspar and amphibole.	
20		
		SIEVE
25		
	SILTY SAND (SM): black (10YR 2/1) and dark gray (5Y 4/1), 80% fine grained sand, subangular to subrounded; 20% silt; well sorted; contains quartz, feldspar and amphibole; organic rich (wood).	
30	SAND (SP): olive gray (5Y 5/2), 100% fine grained sand, subangular to subrounded; well sorted; contains quartz, feldspar and amphibole.	
	SAND (SP): dark greenish gray (10Y 4/1), 100% fine grained sand, subangular to subrounded, trace medium grained; well sorted; contains quartz, feldspar and amphibole.	
35	CLAY (CL): dark greenish gray (10Y 4/1), 100% clay, medium plasticity, soft, silty; trace silt; abundance of horizontal black/ashy deposits between 34.5 - 36.4 ft bgs; mica present; trace white flakes (shells?); bluish coloration.	
40	SILT (ML): dark greenish gray (10Y 4/1), 100% silt; no to low plasticity; clayey interbeds with horizontal black/ashy laminations; trace white ashy deposits from 39.5 -40.0 ft bgs; mica present.	SS
45	CLAY (CL): very dark greenish gray (10Y 3/1), 95% clay, medium plasticity, soft, trace horizontal black/ashy deposits; 5% fine grained sand, subangular to subrounded, interbedded; contains quartz, feldspar and amphibole.	
50	SAND (SP): dark greenish gray (10Y 4/1), 95% fine grained sand, subangular to subrounded, trace medium grained; 5% clay, clayey interbeds at 52.8 - 53.4 ft bgs and 54.4	

SS: Splitspoon sample GRAB: Grab sample PTS: Splitspoon submitted for analysis SIEVE: Grab sieved by GSSI

GEOSCIENCE
P.O. Box 220
Claremont, CA 91711
Telephone: (909) 451-6650
Fax: (909) 451-6638
www.gssiwater.com

BOREHOLE NAME **MDW-1**

BOREHOLE LITHOLOGIC LOG (continued)

CLIENT California American Water
PROJECT NUMBER 13017-13
LOCATION **Castroville, CA**

Lithologic Log

NOTE: Grain size distribution percentages are approximate. Material code (e.g. SP) reference Unified Soil Classification visual method. Color code (e.g. 10YR 5/2) reference Munsell Soil Color Charts.

Depth bgs (feet)	GAMMA (GAPI) 0 110	CLID (mmho/m) 1500 0	Zone Test	Graphic Log	Lithologic Log	Depth bgs (feet)	Sample Type
					- 54.8 ft bgs; well sorted; contains quartz, feldspar and amphibole.		GRAB
55					SAND (SP): pale olive (5Y 6/3), 100% fine to medium grained sand, subangular to subrounded, predominantly fine grained; medium sorted; contains quartz, feldspar, mica, amphibole and other; trace gray mottling.	55	
60			Zone #4			60	SIEVE
65			SC: 32,970 uS/cm		SAND (SP): light yellowish brown (2.5Y 6/4), 100% fine to coarse grained sand, subrounded to rounded; trace fine to coarse gravel up to 50 mm, subrounded to rounded; poorly sorted; contains quartz, feldspar, mica, amphibole and other; trace shell fragments; orange interbed at 64.8 - 65.5 ft bgs.	65	
					SAND (SP): dark gray (5Y 4/1), 100% fine to medium grained sand, subrounded to rounded, tan mottling; trace fine gravel up to 12 mm, rounded; poorly sorted; contains quartz, feldspar, mica, amphibole and other; trace shell fragments.		SS
70					SAND (SP): light yellowish brown (2.5Y 6/4), 100% fine to coarse grained sand, predominantly medium grained, subrounded to rounded; trace fine gravel up to 17 mm, rounded; poorly sorted; contains quartz, feldspar, mica, amphibole and other; contains shells and shell fragments.	70	SIEVE
					SILT (ML): very dark greenish gray (5GY 3/1), 95% silt; 5% sand, very fine grained, subangular to subrounded; trace clay; contains quartz, feldspar and mica; trace shell fragments and black/ashy point deposits.		
75					SILTY SAND (SM): very dark greenish gray (5GY 3/1), 85% fine grained sand, subangular to subrounded; 15% silt; well sorted; contains quartz and feldspar; abundance of shells and shell fragments.	75	
					SILT (ML): very dark greenish gray (5GY 3/1), 90% silt; 10% fine grained sand, subangular to subrounded; trace clay, no to low plasticity; trace shell fragments.		
80					FAT CLAY (CH): very dark greenish gray (5GY 3/1), 100% clay, high plasticity, soft; trace horizontal black/ashy laminations.	80	
					SANDY SILT (ML): dark greenish gray (5GY 4/1), 70% silt; 30% sand, very fine grained, subangular to subrounded; contains quartz and mica; trace thin clay layers; trace horizontal black/ashy deposits; trace shell fragments.		
85					SILTY SAND (SM): dark greenish gray (10Y 4/1), 85% sand, very fine to fine grained, subangular to subrounded; 15% silt; trace clay, trace clay layers, clayey beds at 82.8 - 83.3 ft bgs and 89.5 - 90.2 ft bgs; well sorted; contains quartz, feldspar and mica; trace horizontal black/ashy deposits; higher mica content; trace shell fragments.	85	
90					CLAY (CL): dark greenish gray (5GY 4/1), 100% clay, medium plasticity; trace silt; horizontal black/ashy laminations; trace shell fragments and possible organic matter.	90	
					SILT (ML): dark greenish gray (10Y 4/1), 100% silt; trace sand, very fine grained, subangular to subrounded; trace clay; contains mica; trace horizontal black/ashy laminations.		
95					CLAY (CL): dark greenish gray (5GY 4/1), 100% clay, medium to high plasticity; trace silt; trace horizontal and point black/ashy deposits; trace organic matter.	95	
100					SILT (ML): dark greenish gray (5GY 4/1), 100% silt; trace sand, very fine grained, subangular to subrounded; trace mica.	100	
					CLAY (CL): dark greenish gray (10Y 4/1), 100% clay, medium plasticity, dense; trace silt, 1 - 3 in. interbeds between 102 - 103.7 ft bgs; trace shell fragments below 106.0 ft bgs; trace black/ashy point deposits.		
105						105	

SS: Splitspoon sample GRAB: Grab sample PTS: Splitspoon submitted for analysis SIEVE: Grab sieved by GSSI

Geoscience Support Services, Inc.

GEOSCIENCE
P.O. Box 220
Claremont, CA 91711
Telephone: (909) 451-6650
Fax: (909) 451-6638
www.gssiwater.com

BOREHOLE LITHOLOGIC LOG (continued)

BOREHOLE NAME	CLIENT	LOCATION
MDW-1	California American Water	**Castroville, CA**
	PROJECT NUMBER 13017-13	

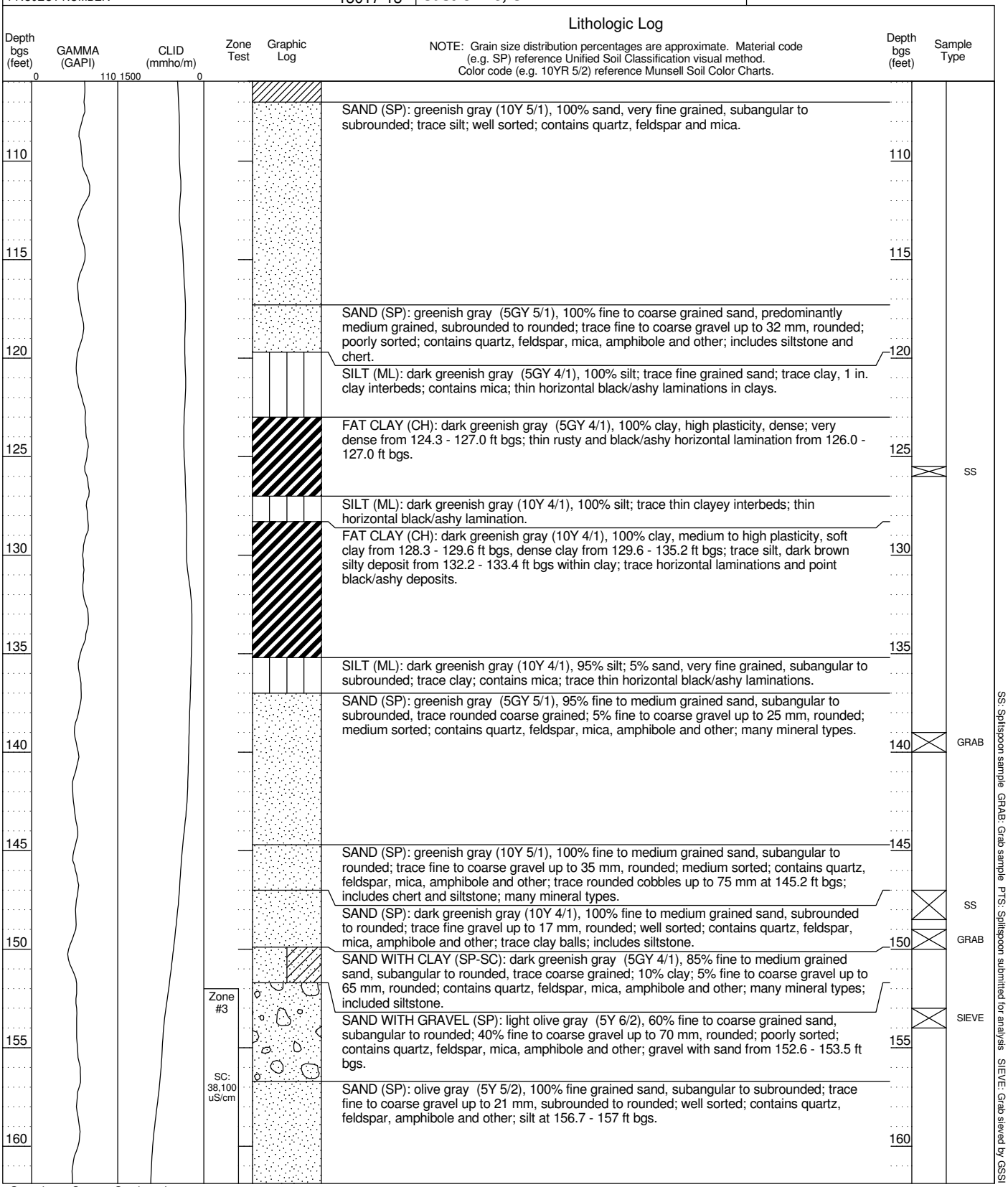

Geoscience Support Services, Inc.

GEOSCIENCE
P.O. Box 220
Claremont, CA 91711
Telephone: (909) 451-6650
Fax: (909) 451-6638
www.gssiwater.com

BOREHOLE NAME **MDW-1**

BOREHOLE LITHOLOGIC LOG (continued)

CLIENT California American Water
PROJECT NUMBER 13017-13
LOCATION **Castroville, CA**

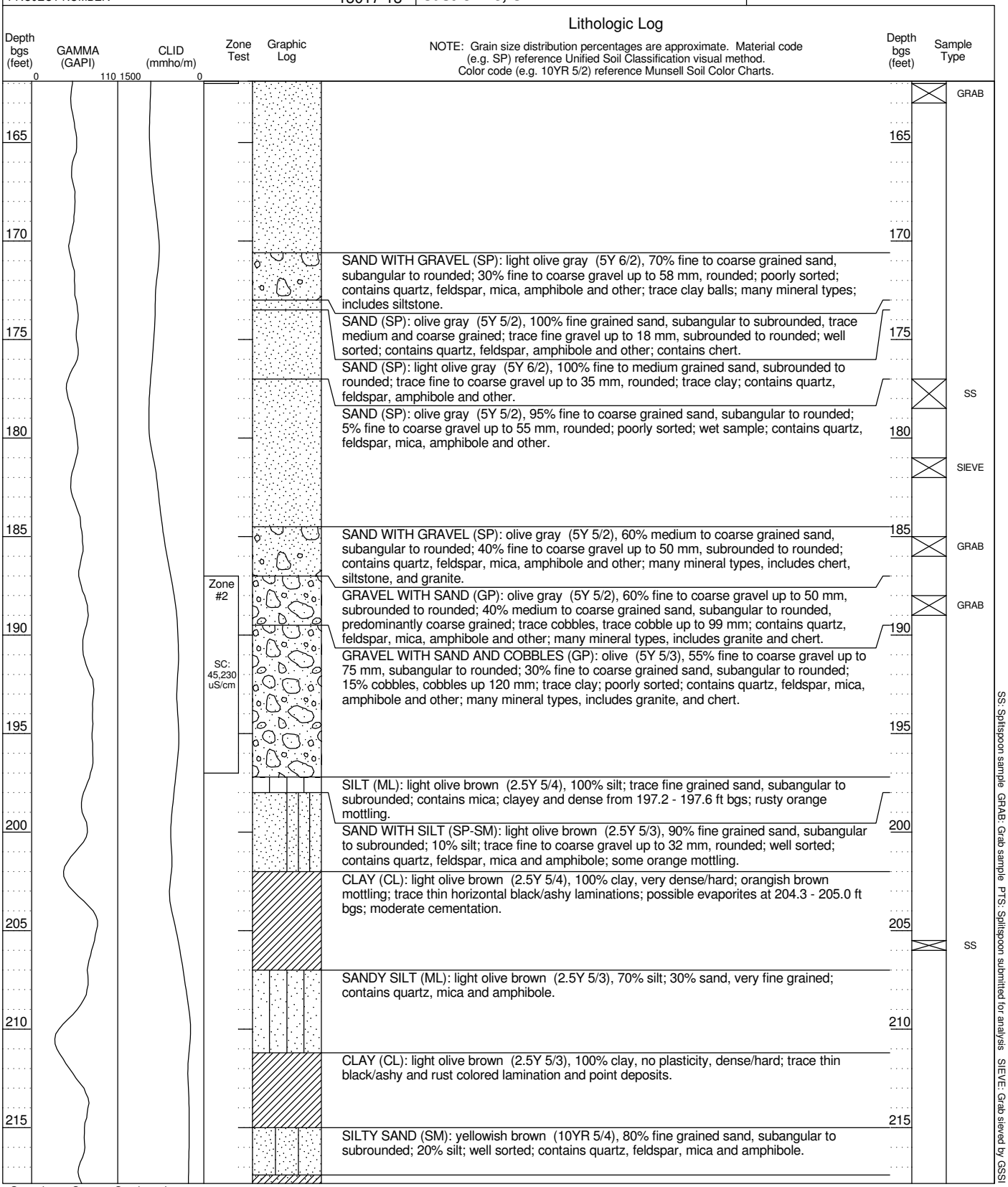

GEOSCIENCE
P.O. Box 220
Claremont, CA 91711
Telephone: (909) 451-6650
Fax: (909) 451-6638
www.gssiwater.com

BOREHOLE NAME **MDW-1**

BOREHOLE LITHOLOGIC LOG (continued)

CLIENT California American Water
PROJECT NUMBER 13017-13
LOCATION **Castroville, CA**

Lithologic Log

NOTE: Grain size distribution percentages are approximate. Material code (e.g. SP) reference Unified Soil Classification visual method. Color code (e.g. 10YR 5/2) reference Munsell Soil Color Charts.

Depth bgs (feet)	GAMMA (GAPI) 0 110	CLID (mmho/m) 1500 0	Zone Test	Graphic Log	Lithologic Log	Depth bgs (feet)	Sample Type
220					SANDY CLAY (CL): brown (7.5YR 4/4) and yellowish red (5YR 4/6), 60% clay, no plasticity, dense/hard; 40% fine grained sand, subangular to subrounded; contains quartz, feldspar and amphibole; rust colored mottling.	220	
225					CLAYEY SAND (SC): strong brown (7.5YR 4/6), 80% fine grained sand, subangular to subrounded; 20% clay; well sorted; contains quartz, feldspar and amphibole; some rust colored mottling.	225	
					SAND (SP): yellowish brown (10YR 5/4), 95% fine grained sand, subangular to subrounded; 5% clay; well sorted; contains quartz, feldspar and amphibole; compact/tight.		
230					SAND (SP): light olive brown (2.5Y 5/3), 100% fine grained sand, subangular to subrounded; well sorted; contains quartz, feldspar, amphibole and other; moderately cemented sand pieces from 229.0 - 229.6 ft bgs.	230	
					SAND (SP): grayish brown (2.5Y 5/2) and weak red (2.5YR 5/2), 100% fine grained sand, subangular to subrounded; trace clay; well sorted; contains quartz, feldspar, amphibole and other; purplish mottling with some fines.		GRAB
235						235	
240			Zone #1 SC: 44,180 uS/cm		SAND (SP): light olive brown (2.5Y 5/3), 100% fine grained sand, subangular to subrounded; well sorted; contains quartz, feldspar, amphibole and other; abundance of spherical (~5/8 in.) cemented sand balls from 240.5 - 242.0 ft bgs, up to 3 balls fused, possible storm event; small irregular cemented sand balls at 248.0 -248.7 ft bgs, moderately cemented.	240	
							GRAB
245						245	
250					SAND (SP): olive brown (2.5Y 4/4), 100% fine grained sand, subangular to subrounded; well sorted; contains quartz, feldspar, amphibole and other; small moderately cemented sand balls at 249.8 ft bgs and 254.4 - 256.5 ft bgs.	250	
255						255	
260					SAND (SP): dark yellowish brown (10YR 4/4), 100% fine to medium grained sand, subangular to subrounded; trace clay; well sorted; contains quartz, feldspar, amphibole and other; abundance (~1/2) of moderately to strongly cemented sand pieces/fragments up to 65 mm; some rusty/brown lamination; no cementation from 260 - 262 ft bgs.	260	
							GRAB
265						265	
270					SAND (SP): brown (10YR 4/3), 100% fine to medium grained sand, subangular to subrounded; trace clay; well sorted; contains quartz, feldspar, amphibole and other; some small moderately to strongly cemented sand balls and fragments at 272.0 - 272.4 ft bgs and 273.5 - 274.5 ft bgs.	270	

SS: Splitspoon sample GRAB: Grab sample PTS: Splitspoon submitted for analysis SIEVE: Grab sieved by GSSI

Geoscience Support Services, Inc.

GEOSCIENCE
P.O. Box 220
Claremont, CA 91711
Telephone: (909) 451-6650
Fax: (909) 451-6638
www.gssiwater.com

BOREHOLE NAME
MDW-1

BOREHOLE LITHOLOGIC LOG (continued)

CLIENT California American Water
PROJECT NUMBER 13017-13
LOCATION **Castroville, CA**

Lithologic Log

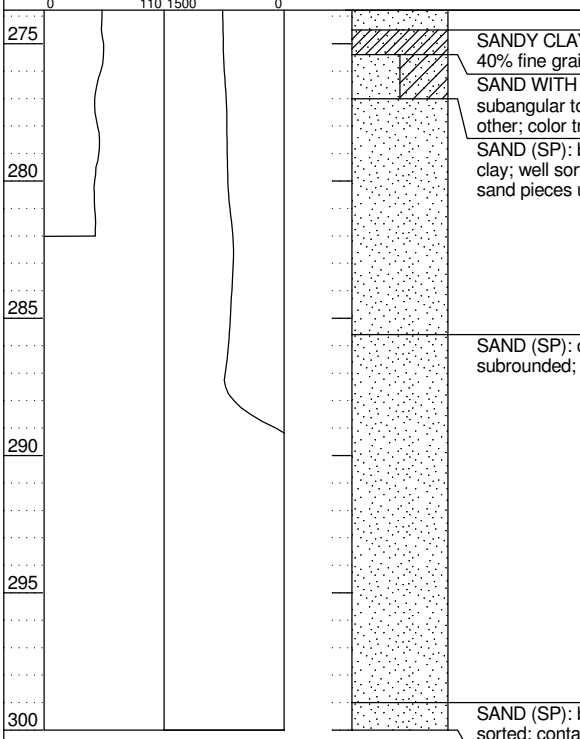

NOTE: Grain size distribution percentages are approximate. Material code (e.g. SP) reference Unified Soil Classification visual method. Color code (e.g. 10YR 5/2) reference Munsell Soil Color Charts.

Depth bgs (feet) | Sample Type

275 — SANDY CLAY (CL): dark yellowish brown (10YR 4/4), 60% clay, no plasticity, dense/hard; 40% fine grained sand; moderately cemented.

SAND WITH CLAY (SP-SC): yellowish brown (10YR 5/4), 90% fine grained sand, subangular to subrounded; 10% clay; well sorted; contains quartz, feldspar, amphibole and other; color transition.

280 — SAND (SP): brown (7.5YR 4/4), 95% fine grained sand, subangular to subrounded; 5% clay; well sorted; contains quartz, feldspar, amphibole and other; tight; moderately cemented sand pieces up to 80 mm at 283.2 - 285.6 ft bgs; rusty mottled coloration and lamination. — GRAB

285 — SAND (SP): dark grayish brown (10YR 4/2), 100% fine grained sand, subangular to subrounded; well sorted; contains quartz, feldspar, amphibole and other.

290 — GRAB

295

300 — SAND (SP): brown (7.5YR 4/4), 100% fine grained sand, subangular to subrounded; well sorted; contains quartz, feldspar, amphibole and other; some weak cementation.

Bottom of borehole at 300 feet.

SS: Splitspoon sample GRAB: Grab sample PTS: Splitspoon submitted for analysis SIEVE: Grab sieved by GSSI

GEOSCIENCE
P.O. Box 220
Claremont, CA 91711
Telephone: (909) 451-6650
Fax: (909) 451-6638
www.gssiwater.com

BOREHOLE LITHOLOGIC LOG

BOREHOLE NAME **ML-1**							
CLIENT	California American Water	LOCATION **Moss Landing, CA** **Sandholdt Rd** **36° 47' 58.0632", -121° 47' 20.31"** **Geographic NAD83**					
PROJECT NUMBER	13017-13						
REPORT DATE	5/23/2014						
DRILLING CONTRACTOR	Cascade Drilling	LOGGED BY **N. Reynolds**					
DRILLER	Jose Munguia						
DRILLING RIG TYPE	Prosonic 600T	DRILLING METHOD	Sonic	START DATE	10/02/13	BOREHOLE DIAMETER	8 in
SURFACE ELEVATION	8.0 ft	TOTAL DEPTH	200 ft bgs	FINISH DATE	10/07/13	CORE SIZE	6 in

Lithologic Log

NOTE: Grain size distribution percentages are approximate. Material code (e.g. SP) reference Unified Soil Classification visual method. Color code (e.g. 10YR 5/2) reference Munsell Soil Color Charts.

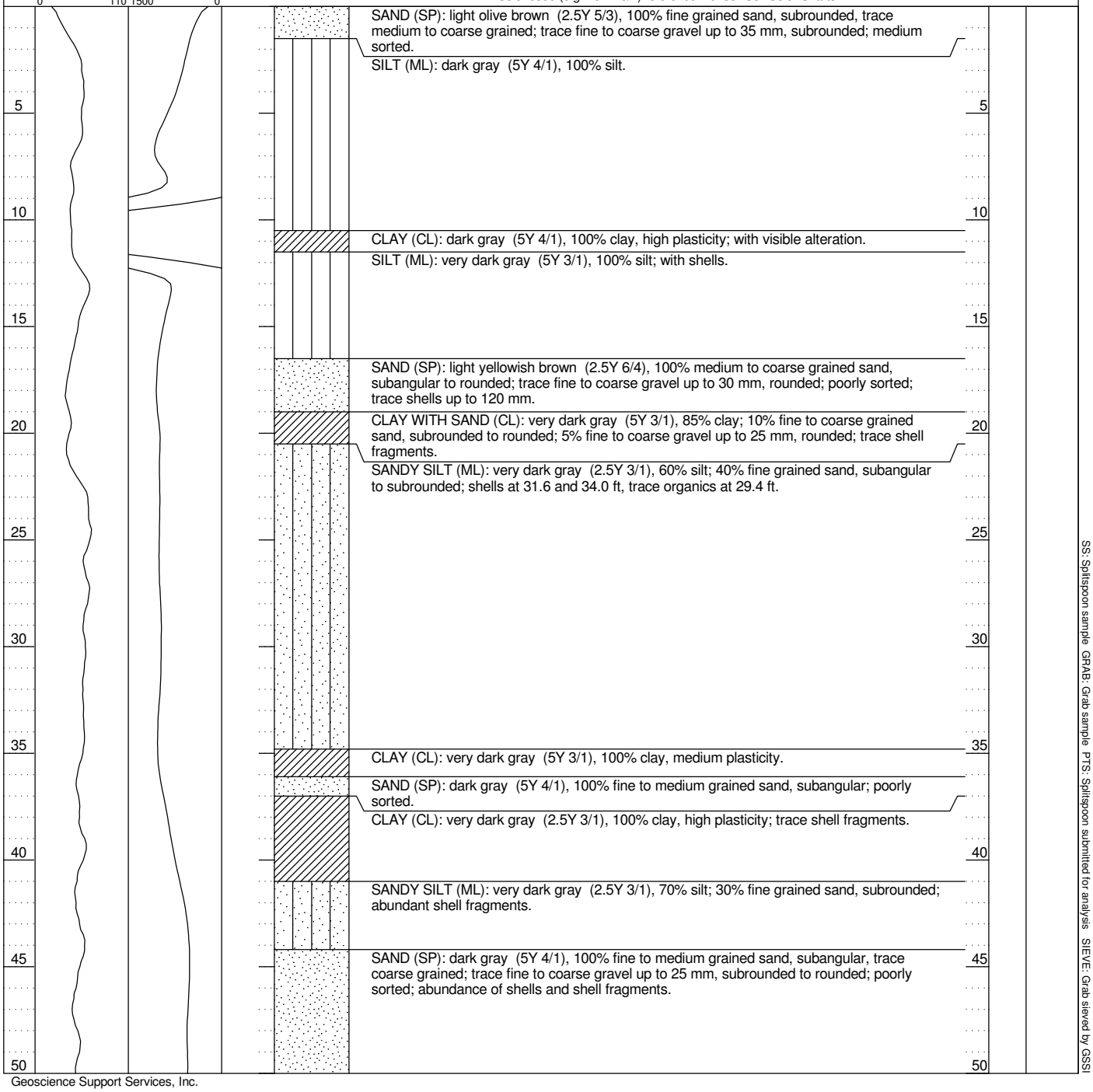

SS: Splitspoon sample GRAB: Grab sample PTS: Splitspoon submitted for analysis SIEVE: Grab sieved by GSSI

GEOSCIENCE
P.O. Box 220
Claremont, CA 91711
Telephone: (909) 451-6650
Fax: (909) 451-6638
www.gssiwater.com

BOREHOLE NAME **ML-1**

BOREHOLE LITHOLOGIC LOG (continued)

CLIENT California American Water
PROJECT NUMBER 13017-13
LOCATION **Moss Landing, CA**

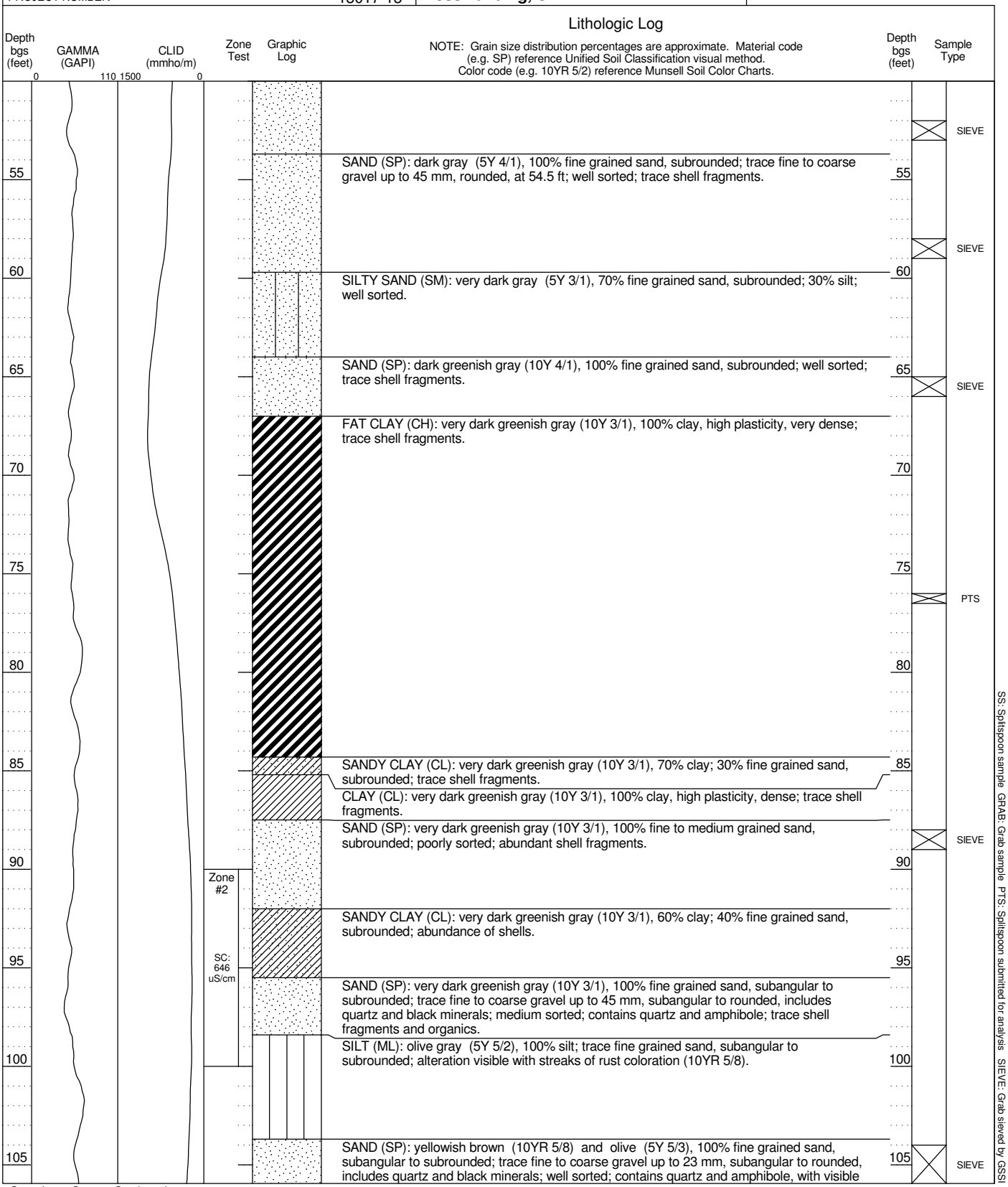

SS: Splitspoon sample GRAB: Grab sample PTS: Splitspoon submitted for analysis SIEVE: Grab sieved by GSSI

GEOSCIENCE
P.O. Box 220
Claremont, CA 91711
Telephone: (909) 451-6650
Fax: (909) 451-6638
www.gssiwater.com

BOREHOLE LITHOLOGIC LOG (continued)

BOREHOLE NAME	CLIENT	LOCATION
ML-1	California American Water	**Moss Landing, CA**
	PROJECT NUMBER 13017-13	

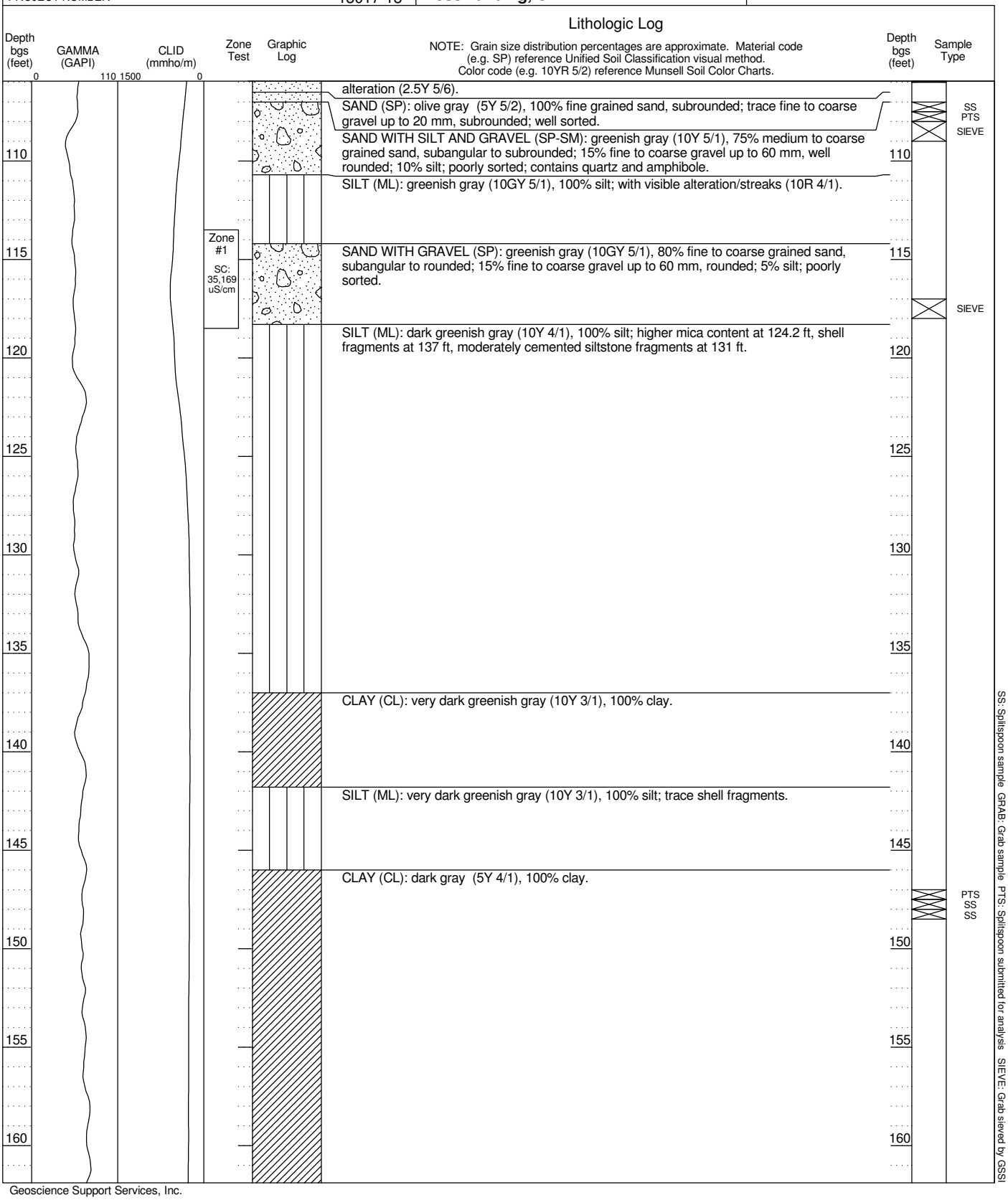

GEOSCIENCE
P.O. Box 220
Claremont, CA 91711
Telephone: (909) 451-6650
Fax: (909) 451-6638
www.gssiwater.com

BOREHOLE LITHOLOGIC LOG (continued)

BOREHOLE NAME	CLIENT	PROJECT NUMBER	LOCATION
ML-1	California American Water	13017-13	**Moss Landing, CA**

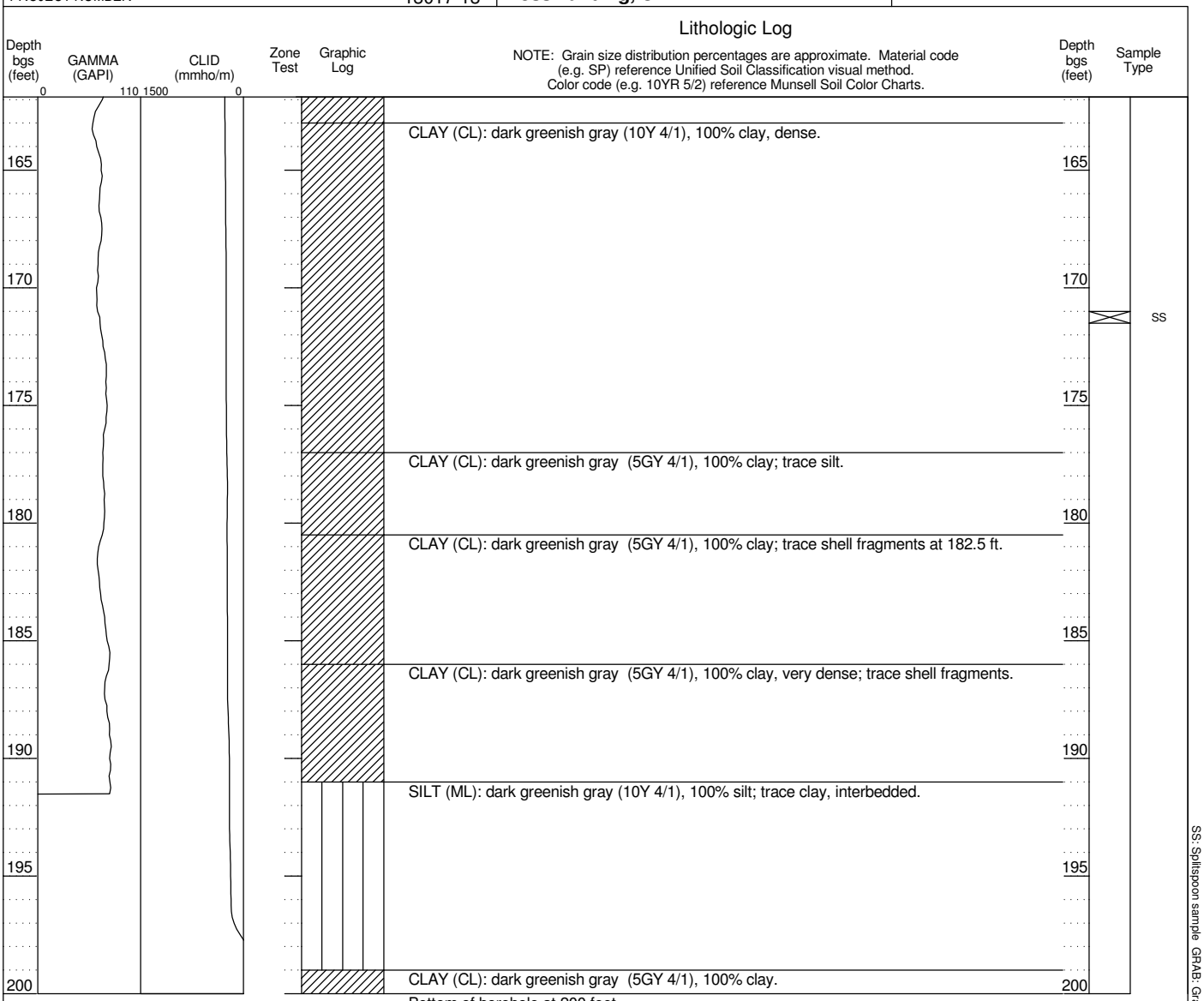

SS: Splitspoon sample GRAB: Grab sample PTS: Splitspoon submitted for analysis SIEVE: Grab sieved by GSSI

GEOSCIENCE
P.O. Box 220
Claremont, CA 91711
Telephone: (909) 451-6650
Fax: (909) 451-6638
www.gssiwater.com

BOREHOLE LITHOLOGIC LOG

BOREHOLE NAME **ML-2**					
CLIENT	California American Water	LOCATION **Moss Landing, CA** **Del Mar Fisheries** **36° 48' 11.7648", -121° 47' 12.4368"** **Geographic NAD83**			
PROJECT NUMBER	13017-13				
REPORT DATE	5/23/2014				
DRILLING CONTRACTOR	Cascade Drilling	LOGGED BY **N. Reynolds**			
DRILLER	Jose Munguia				
DRILLING RIG TYPE	Prosonic 600T	DRILLING METHOD	Sonic	START DATE	12/09/13
BOREHOLE DIAMETER	8 in	SURFACE ELEVATION	7.0 ft	TOTAL DEPTH	200 ft bgs
FINISH DATE	12/19/13	CORE SIZE	6 in		

Lithologic Log

NOTE: Grain size distribution percentages are approximate. Material code (e.g. SP) reference Unified Soil Classification visual method. Color code (e.g. 10YR 5/2) reference Munsell Soil Color Charts.

Depth bgs (feet)	GAMMA (GAPI) 0 110	CLID (mmho/m) 1500 0	Zone Test	Graphic Log	Lithologic Log	Depth bgs (feet)	Sample Type
					SANDY SILT (ML): olive gray (5Y 4/2), 65% silt; 25% fine to medium grained sand, subangular; 10% fine to coarse gravel up to 26 mm, subangular; contains quartz, feldspar, and other; asphalt present.		
					SAND (SP): light yellowish brown (2.5Y 6/4), 100% fine to medium grained sand, subangular to subrounded, predominantly fine grained; trace silt; medium sorted; contains quartz and feldspar.		
5					SANDY SILT (ML): very dark grayish brown (10YR 3/2), 60% silt; 40% fine grained sand, subangular to subrounded; trace fine to coarse gravel up to 29 mm, subangular to subrounded; contains quartz and feldspar; red brick and concrete block to 90 mm.	5	
					SAND (SP): very dark grayish brown (2.5Y 3/2) and dark grayish brown (2.5Y 4/2), 100% fine to medium grained sand, subrounded to rounded, trace coarse grained; trace fine to coarse gravel up to 41 mm, subangular; trace silt; poorly sorted; contains quartz, feldspar,		
10					amphibole, and other.	10	
					SAND (SW): light yellowish brown (2.5Y 6/4), 100% fine to coarse grained sand, subrounded to rounded; trace fine to coarse gravel up to 27 mm, subrounded to rounded; poorly sorted; contains quartz, feldspar, amphibole, and other; well rounded coarse sand and fine gravel layer with shells at 13.7 ft.		
15					SAND (SP): olive gray (5Y 4/2), 100% fine to medium grained sand, subangular to rounded; trace silt; medium sorted; contains quartz, feldspar, amphibole, and other; trace shell fragments.	15	
20						20	
					SAND (SP): light olive gray (5Y 6/2), 100% fine to medium grained sand, subangular to rounded; trace silt, trace thin silt lens; medium sorted; contains quartz, feldspar, amphibole, and other; trace organics/wood.		
					SILT (ML): very dark greenish gray (10Y 3/1), 100% silt; trace fine grained sand, subrounded; contains mica; organics/wood.		
25					SAND (SW): light yellowish brown (2.5Y 6/3), 100% fine to coarse grained sand, subrounded to rounded; trace fine gravel up to 5 mm, rounded; poorly sorted; contains quartz, feldspar, amphibole, and other; trace shell fragments.	25	SIEVE
					CLAY (CL): dark greenish gray (5GY 4/1), 80% clay, medium plasticity, soft; 20% silt; silty clay with an abundance of shells.		
30					SILT (ML): dark greenish gray (5G 4/1), 100% silt, low plasticity; abundant shells and shell fragments.	30	
					SANDY SILT (ML): dark greenish gray (5GY 4/1), 51% silt; 49% fine grained sand, subrounded; trace fine gravel up to 18 mm, rounded; contains quartz, feldspar, and other; alternating fine sand and silt; abundance of shells and shell fragments; thin black/dark brown laminations (organics/wood).		
35					FAT CLAY (CH): dark greenish gray (5GY 4/1), 100% clay, high plasticity; trace shells.	35	
					SAND (SP): greenish gray (5GY 5/1) and dark greenish gray (5GY 4/1), 100% fine grained sand, subangular to subrounded; trace silt; trace clay; well sorted; interbeded clays and silts approx. every foot, thin black laminations in clays, trace shell and organics(wood), large shells up to 61 mm at 39.0 ft; silt at 41.0 to 41.5, 46.3 to 46.6, 50.6 to 51.5 ft; clay at 52.5 to 54.1 ft.		
40						40	
45						45	
50						50	

SS: Splitspoon sample GRAB: Grab sample PTS: Splitspoon submitted for analysis SIEVE: Grab sieved by GSSI

Geoscience Support Services, Inc.

GEOSCIENCE
P.O. Box 220
Claremont, CA 91711
Telephone: (909) 451-6650
Fax: (909) 451-6638
www.gssiwater.com

BOREHOLE NAME **ML-2**

BOREHOLE LITHOLOGIC LOG (continued)

CLIENT California American Water
PROJECT NUMBER 13017-13
LOCATION **Moss Landing, CA**

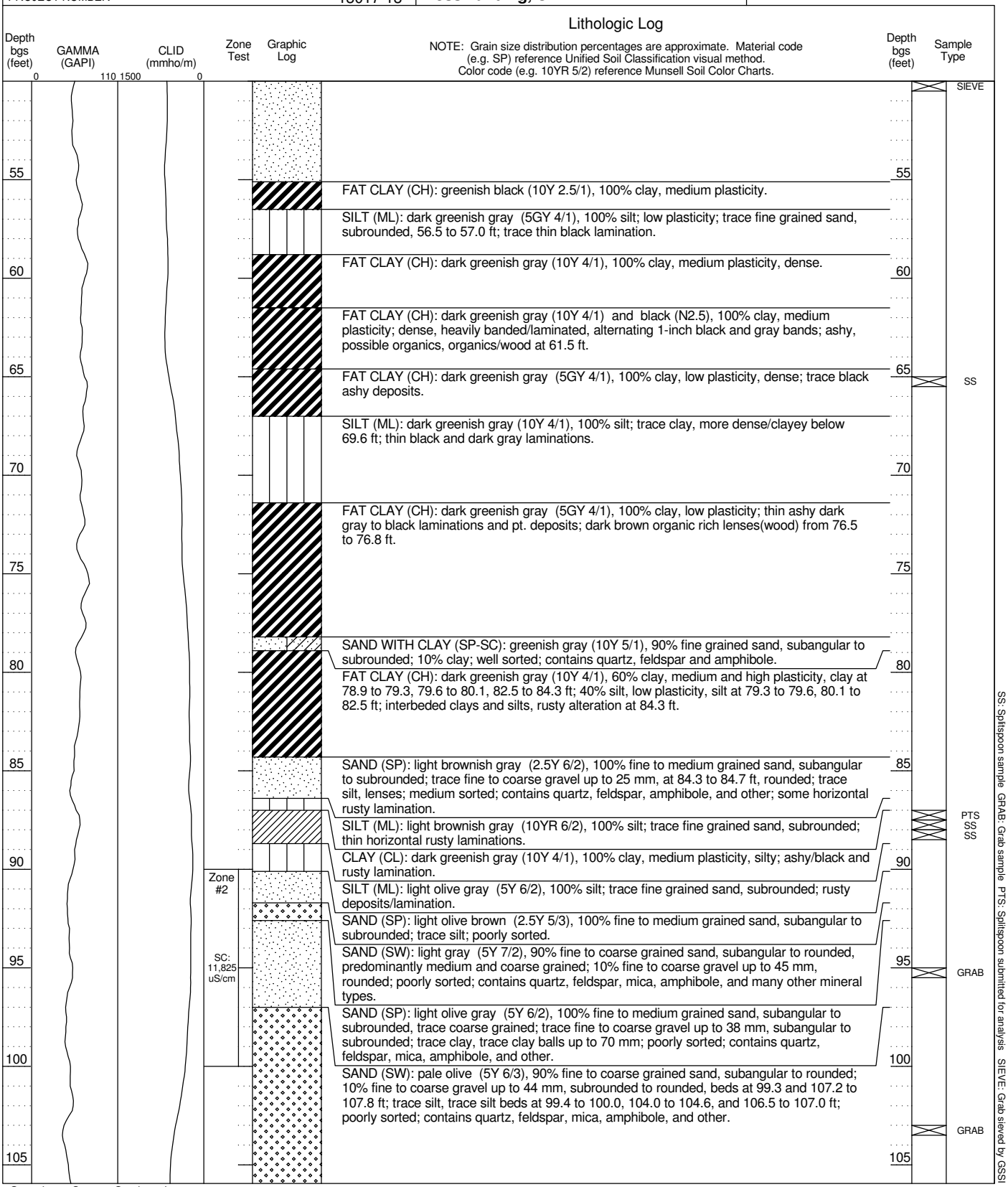

SS: Splitspoon sample GRAB: Grab sample PTS: Splitspoon submitted for analysis SIEVE: Grab sieved by GSSI

GEOSCIENCE
P.O. Box 220
Claremont, CA 91711
Telephone: (909) 451-6650
Fax: (909) 451-6638
www.gssiwater.com

BOREHOLE LITHOLOGIC LOG (continued)

BOREHOLE NAME	CLIENT	LOCATION
ML-2	California American Water	**Moss Landing, CA**
	PROJECT NUMBER 13017-13	

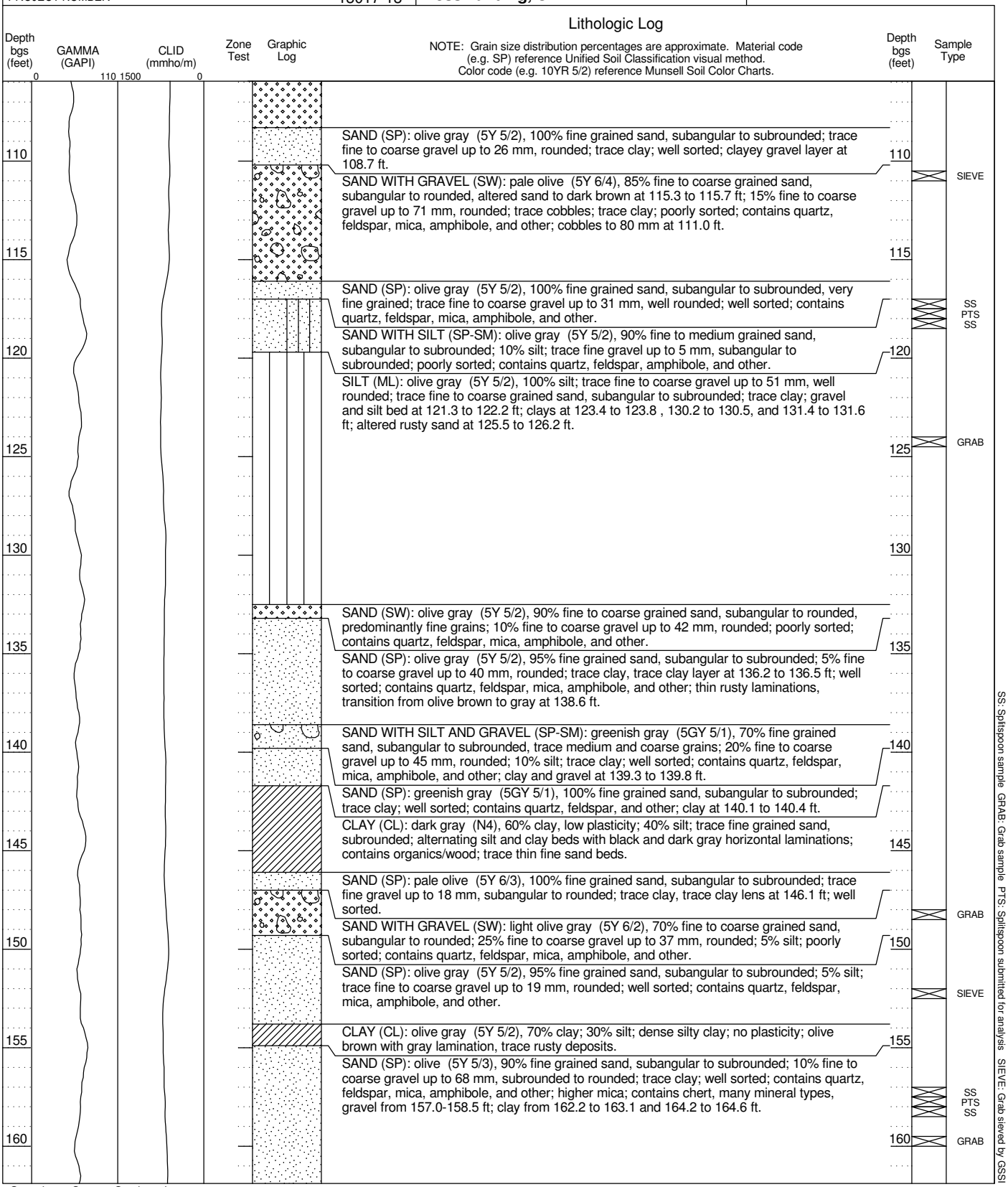

GEOSCIENCE
P.O. Box 220
Claremont, CA 91711
Telephone: (909) 451-6650
Fax: (909) 451-6638
www.gssiwater.com

BOREHOLE LITHOLOGIC LOG (continued)

BOREHOLE NAME	CLIENT	PROJECT NUMBER	LOCATION
ML-2	California American Water	13017-13	**Moss Landing, CA**

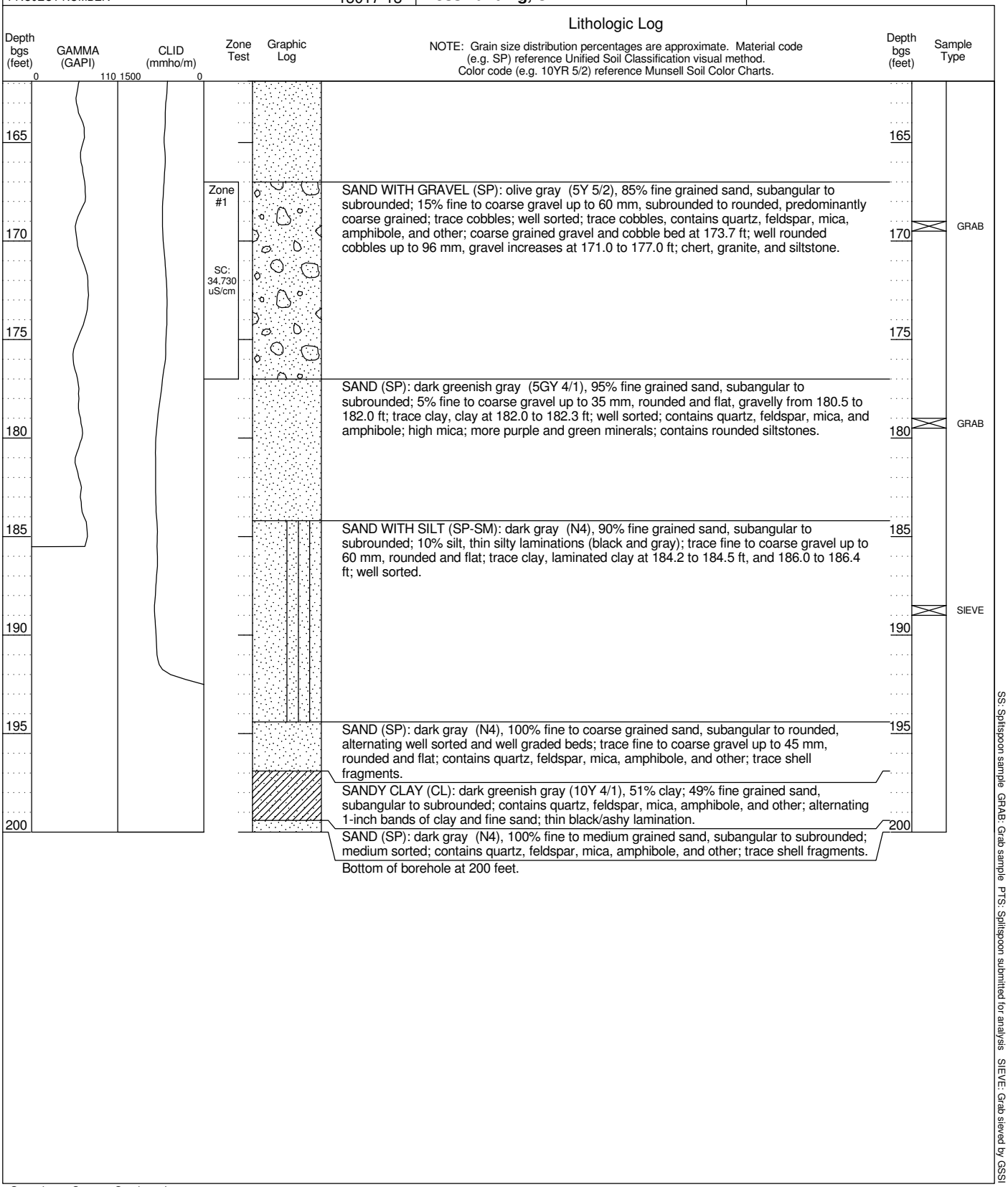

SS: Splitspoon sample GRAB: Grab sample PTS: Splitspoon submitted for analysis SIEVE: Grab sieved by GSSI

GEOSCIENCE
P.O. Box 220
Claremont, CA 91711
Telephone: (909) 451-6650
Fax: (909) 451-6638
www.gssiwater.com

BOREHOLE LITHOLOGIC LOG

BOREHOLE NAME **ML-3**					
CLIENT	California American Water	LOCATION **Moss Landing, CA** **Nadar Agha Property** **36° 48' 00.6768", -121° 47' 00.7656"** **Geographic NAD83**			
PROJECT NUMBER	13017-13				
REPORT DATE	5/23/2014				
DRILLING CONTRACTOR	Cascade Drilling	LOGGED BY **N. Reynolds**			
DRILLER	Jose Munguia				
DRILLING RIG TYPE	Prosonic 600T	DRILLING METHOD	Sonic	START DATE	1/07/14
BOREHOLE DIAMETER	8 in	SURFACE ELEVATION	16.0 ft	TOTAL DEPTH	200 ft bgs
FINISH DATE	1/13/13	CORE SIZE	6 in		

Lithologic Log

NOTE: Grain size distribution percentages are approximate. Material code (e.g. SP) reference Unified Soil Classification visual method. Color code (e.g. 10YR 5/2) reference Munsell Soil Color Charts.

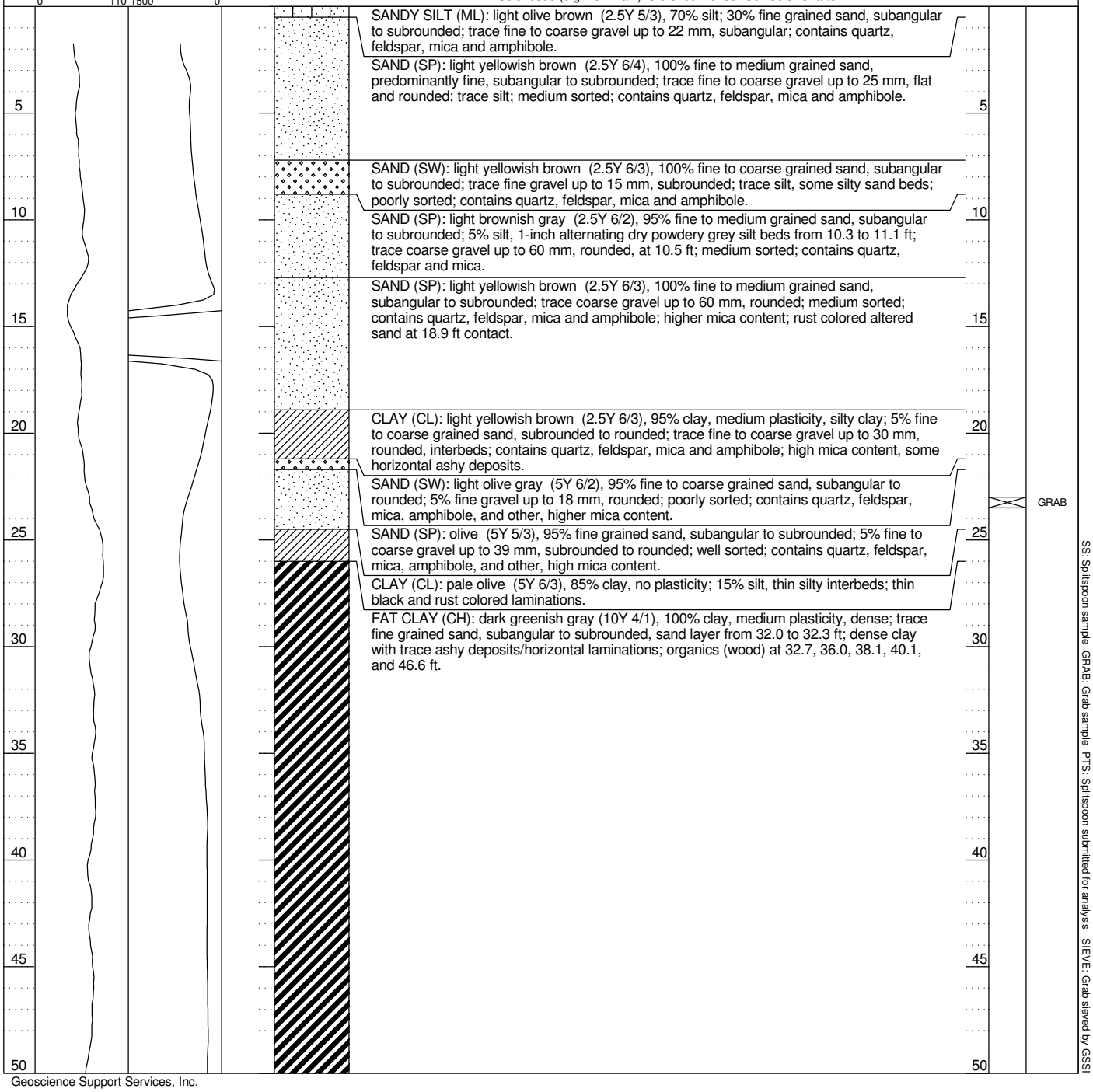

SANDY SILT (ML): light olive brown (2.5Y 5/3), 70% silt; 30% fine grained sand, subangular to subrounded; trace fine to coarse gravel up to 22 mm, subangular; contains quartz, feldspar, mica and amphibole.

SAND (SP): light yellowish brown (2.5Y 6/4), 100% fine to medium grained sand, predominantly fine, subangular to subrounded; trace fine to coarse gravel up to 25 mm, flat and rounded; trace silt; medium sorted; contains quartz, feldspar, mica and amphibole.

SAND (SW): light yellowish brown (2.5Y 6/3), 100% fine to coarse grained sand, subangular to subrounded; trace fine gravel up to 15 mm, subrounded; trace silt, some silty sand beds; poorly sorted; contains quartz, feldspar, mica and amphibole.

SAND (SP): light brownish gray (2.5Y 6/2), 95% fine to medium grained sand, subangular to subrounded; 5% silt, 1-inch alternating dry powdery grey silt beds from 10.3 to 11.1 ft; trace coarse gravel up to 60 mm, rounded, at 10.5 ft; medium sorted; contains quartz, feldspar and mica.

SAND (SP): light yellowish brown (2.5Y 6/3), 100% fine to medium grained sand, subangular to subrounded; trace coarse gravel up to 60 mm, rounded; medium sorted; contains quartz, feldspar, mica and amphibole; higher mica content; rust colored altered sand at 18.9 ft contact.

CLAY (CL): light yellowish brown (2.5Y 6/3), 95% clay, medium plasticity, silty clay; 5% fine to coarse grained sand, subrounded to rounded; trace fine to coarse gravel up to 30 mm, rounded, interbeds; contains quartz, feldspar, mica and amphibole; high mica content, some horizontal ashy deposits.

SAND (SW): light olive gray (5Y 6/2), 95% fine to coarse grained sand, subangular to rounded; 5% fine gravel up to 18 mm, rounded; poorly sorted; contains quartz, feldspar, mica, amphibole, and other, higher mica content.

SAND (SP): olive (5Y 5/3), 95% fine grained sand, subangular to subrounded; 5% fine to coarse gravel up to 39 mm, subrounded to rounded; well sorted; contains quartz, feldspar, mica, amphibole, and other, high mica content.

CLAY (CL): pale olive (5Y 6/3), 85% clay, no plasticity; 15% silt, thin silty interbeds; thin black and rust colored laminations.

FAT CLAY (CH): dark greenish gray (10Y 4/1), 100% clay, medium plasticity, dense; trace fine grained sand, subangular to subrounded, sand layer from 32.0 to 32.3 ft; dense clay with trace ashy deposits/horizontal laminations; organics (wood) at 32.7, 36.0, 38.1, 40.1, and 46.6 ft.

SS: Splitspoon sample GRAB: Grab sample PTS: Splitspoon submitted for analysis SIEVE: Grab sieved by GSSI

Geoscience Support Services, Inc.

GEOSCIENCE
P.O. Box 220
Claremont, CA 91711
Telephone: (909) 451-6650
Fax: (909) 451-6638
www.gssiwater.com

BOREHOLE LITHOLOGIC LOG (continued)

BOREHOLE NAME	CLIENT	PROJECT NUMBER	LOCATION
ML-3	California American Water	13017-13	**Moss Landing, CA**

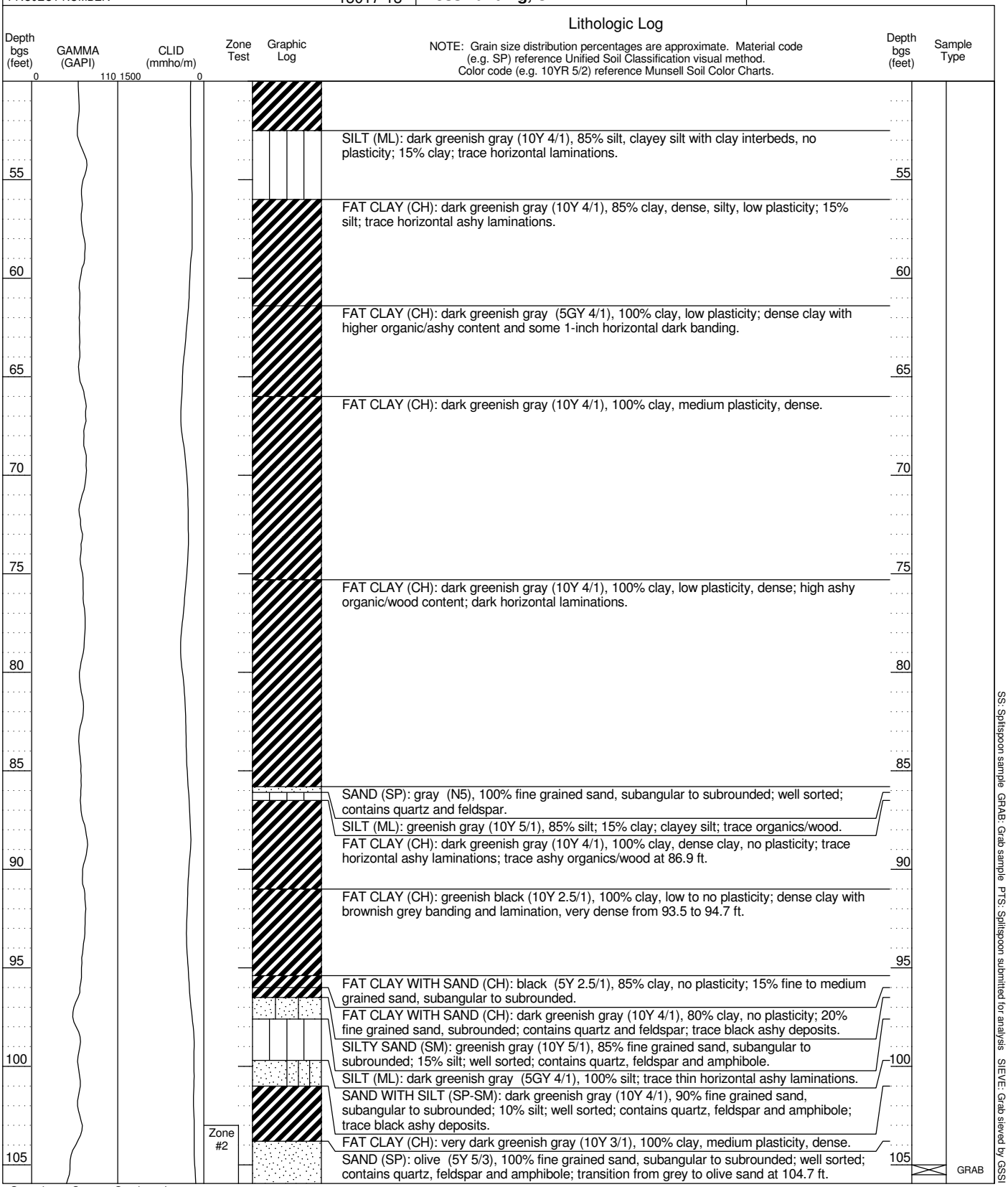

Geoscience Support Services, Inc.

GEOSCIENCE
P.O. Box 220
Claremont, CA 91711
Telephone: (909) 451-6650
Fax: (909) 451-6638
www.gssiwater.com

BOREHOLE LITHOLOGIC LOG (continued)

BOREHOLE NAME	CLIENT	LOCATION
ML-3	California American Water	**Moss Landing, CA**
	PROJECT NUMBER 13017-13	

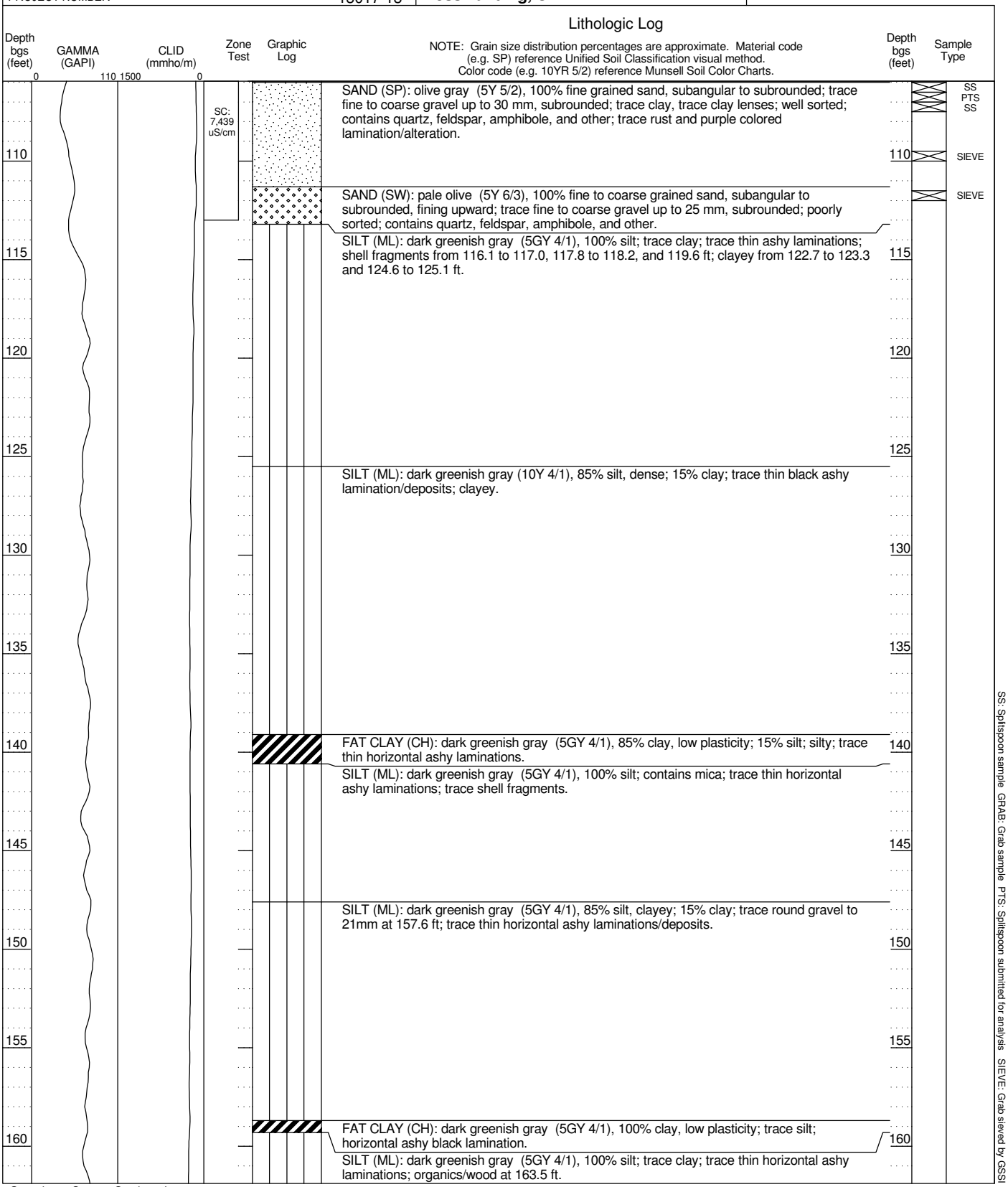

SS: Splitspoon sample GRAB: Grab sample PTS: Splitspoon submitted for analysis SIEVE: Grab sieved by GSSI

GEOSCIENCE
P.O. Box 220
Claremont, CA 91711
Telephone: (909) 451-6650
Fax: (909) 451-6638
www.gssiwater.com

BOREHOLE LITHOLOGIC LOG (continued)

BOREHOLE NAME	CLIENT	PROJECT NUMBER	LOCATION
ML-3	California American Water	13017-13	**Moss Landing, CA**

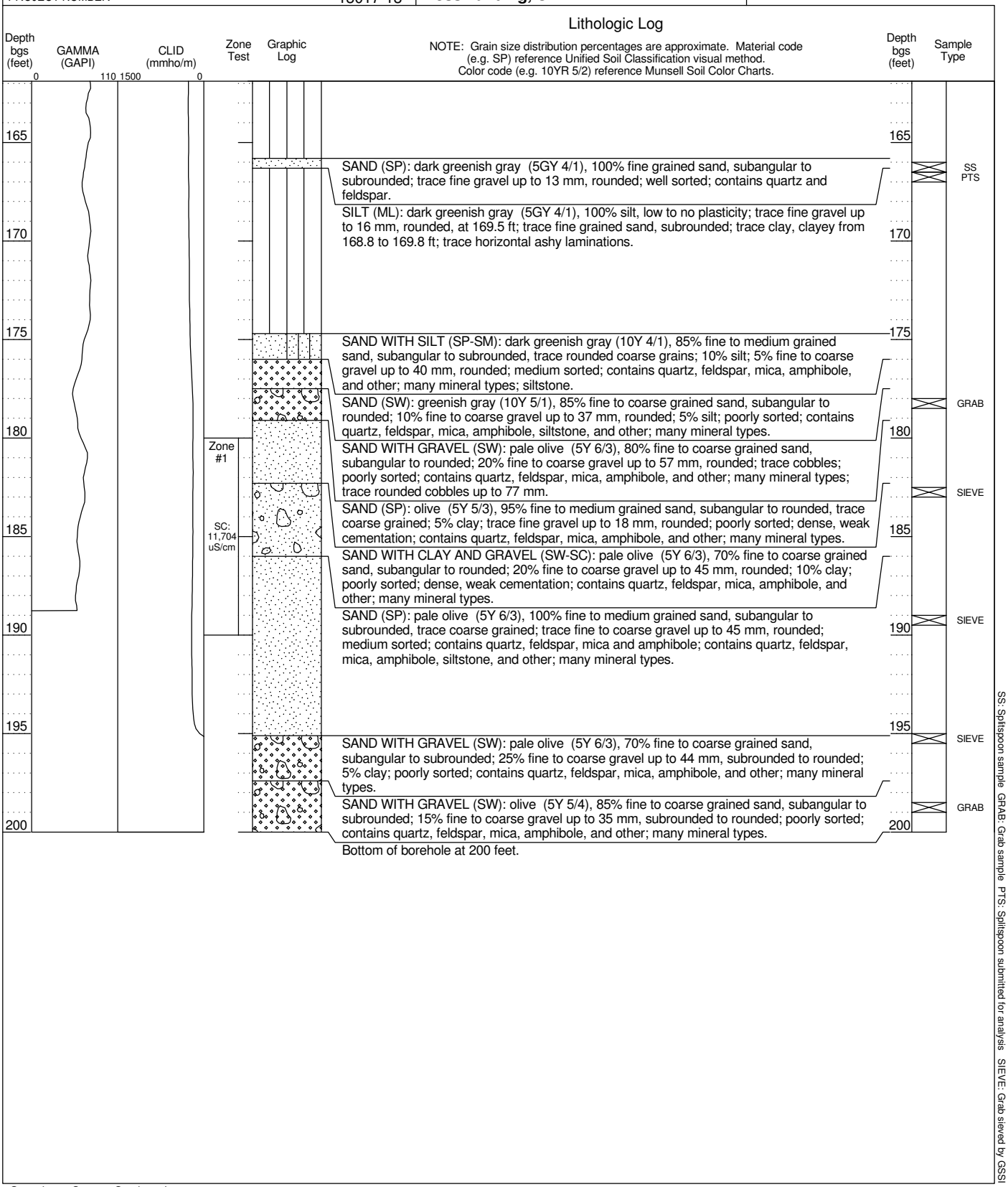

SS: Splitspoon sample GRAB: Grab sample PTS: Splitspoon submitted for analysis SIEVE: Grab sieved by GSSI

GEOSCIENCE
P.O. Box 220
Claremont, CA 91711
Telephone: (909) 451-6650
Fax: (909) 451-6638
www.gssiwater.com

BOREHOLE LITHOLOGIC LOG

BOREHOLE NAME **ML-4**							
CLIENT	California American Water	LOCATION **Moss Landing, CA** **Nadar Agha Property** **36° 48' 09.342", -121° 47' 02.526" Geographic NAD83**					
PROJECT NUMBER	13017-13						
REPORT DATE	5/23/2014						
DRILLING CONTRACTOR	Cascade Drilling	LOGGED BY **N. Reynolds**					
DRILLER	Jose Munguia						
DRILLING RIG TYPE	Prosonic 600T	DRILLING METHOD	Sonic	START DATE	12/02/13	BOREHOLE DIAMETER	8 in
SURFACE ELEVATION	32.0 ft	TOTAL DEPTH	201 ft bgs	FINISH DATE	12/06/13	CORE SIZE	7 in

Lithologic Log

NOTE: Grain size distribution percentages are approximate. Material code (e.g. SP) reference Unified Soil Classification visual method. Color code (e.g. 10YR 5/2) reference Munsell Soil Color Charts.

Depth bgs (feet)	GAMMA (GAPI) 0 110	CLID (mmho/m) 1500 0	Zone Test	Graphic Log	Material Description	Depth bgs (feet)	Sample Type
					SILTY SAND (SM): yellowish brown (10YR 5/4), 80% fine grained sand, subangular to subrounded; 20% silt; trace fine to coarse gravel up to 20 mm, subangular to subrounded; well sorted; contains quartz, feldspar, mica and amphibole; trace organics/roots.		
					SANDY SILT (ML): dark brown (10YR 3/3), 70% silt; 30% fine grained sand, subangular to subrounded; trace fine gravel up to 5 mm, subangular to subrounded; contains quartz and feldspar; trace organics/roots.		
5					SANDY SILT (ML): very dark brown (10YR 2/2), 70% silt; 30% fine grained sand, subangular to subrounded; trace fine gravel up to 5 mm, subangular to rounded; contains quartz and feldspar; trace organics/roots.	5	
					CLAY (CL): olive (5Y 5/3), 90% clay, low plasticity; 10% fine grained sand, subangular to subrounded; contains quartz and feldspar; some rusty alteration.		
10					CLAY (CL): light yellowish brown (2.5Y 6/4), 90% clay, low plasticity, trace cemented clay; 10% silt; trace fine grained sand, subangular to subrounded; friable, organics (black), evaporite minerals (spherical).	10	
					SILT (ML): light yellowish brown (2.5Y 6/3), 90% silt, clayey silt; 10% fine to medium grained sand, subangular to subrounded, 4-inch rusty sand interbeds; contains quartz and feldspar; trace rusty alteration and organics.		
15					SAND (SP): light yellowish brown (2.5Y 6/4), 100% fine grained sand, subangular to subrounded; well sorted; dry sample; contains quartz, feldspar, mica and amphibole; with visible rust colored alteration.	15	
					CLAY (CL): olive (5Y 5/3), 100% clay, clay with silty interbeds; trace fine grained sand, subangular to subrounded, rusty alteration; rust and black horizontal laminations.		
20					SAND (SP): light yellowish brown (2.5Y 6/4), 95% fine to medium grained sand, subangular to subrounded, predominantly fine grained, some rusty alteration; 5% silt; trace fine gravel up to 18 mm, rounded; medium sorted; dry sample; contains quartz, feldspar, mica and amphibole; trace weakly cemented sand and silt interbeds.	20	
25					SAND (SP): pale olive (5Y 6/3), 100% fine to medium grained sand, subangular to subrounded, trace coarse grained; trace fine gravel up to 18 mm, subangular to rounded; medium sorted; contains quartz, feldspar, mica and amphibole.	25	
							SIEVE
30						30	
					SAND (SW): pale olive (5Y 6/3), 95% fine to coarse grained sand, subangular to rounded; 5% fine to coarse gravel up to 65 mm, subangular to rounded, coarse subrounded gravel at 30.7 and 32.1 ft; poorly sorted; contains quartz, feldspar, mica and amphibole.		
35					SAND (SP): light olive brown (2.5Y 5/3), 100% fine grained sand, subangular to subrounded; well sorted; contains quartz, feldspar and amphibole; higher mica content.	35	
					SAND (SP): light olive gray (5Y 6/2), 100% fine to medium grained sand, subangular to rounded, trace coarse grained; trace fine gravel up to 18 mm, rounded; trace clay, trace clay balls; poorly sorted; contains quartz, feldspar, mica, amphibole, and other.		
40					SAND (SP): olive gray (5Y 5/2), 100% fine grained sand, subangular to subrounded, trace coarse black grains; well sorted; contains quartz, feldspar, mica and amphibole; high mica.	40	GRAB
					CLAY (CL): olive gray (5Y 5/2), 100% clay, low to no plasticity; alteration visible, rusty horizontal laminations.		
45					FAT CLAY (CH): dark greenish gray (5GY 4/1), 100% clay, medium plasticity, dense; alteration visible, dark gray laminations.	45	
					SILT WITH SAND (ML): olive gray (5Y 5/2), 85% silt; 15% fine grained sand, subangular to subrounded; alteration visible, rusty horizontal laminations; contains mica.		
					CLAY (CL): olive gray (5Y 5/2), 100% clay, medium plasticity; trace silt; alteration visible, rusty horizontal laminations (silt).		
50					CLAY (CL): dark greenish gray (10Y 4/1), 100% clay, medium plasticity; gray to black	50	

SS: Splitspoon sample GRAB: Grab sample PTS: Splitspoon submitted for analysis SIEVE: Grab sieved by GSSI

Geoscience Support Services, Inc.

GEOSCIENCE
P.O. Box 220
Claremont, CA 91711
Telephone: (909) 451-6650
Fax: (909) 451-6638
www.gssiwater.com

BOREHOLE LITHOLOGIC LOG (continued)

BOREHOLE NAME	CLIENT	LOCATION
ML-4	California American Water	**Moss Landing, CA**
	PROJECT NUMBER 13017-13	

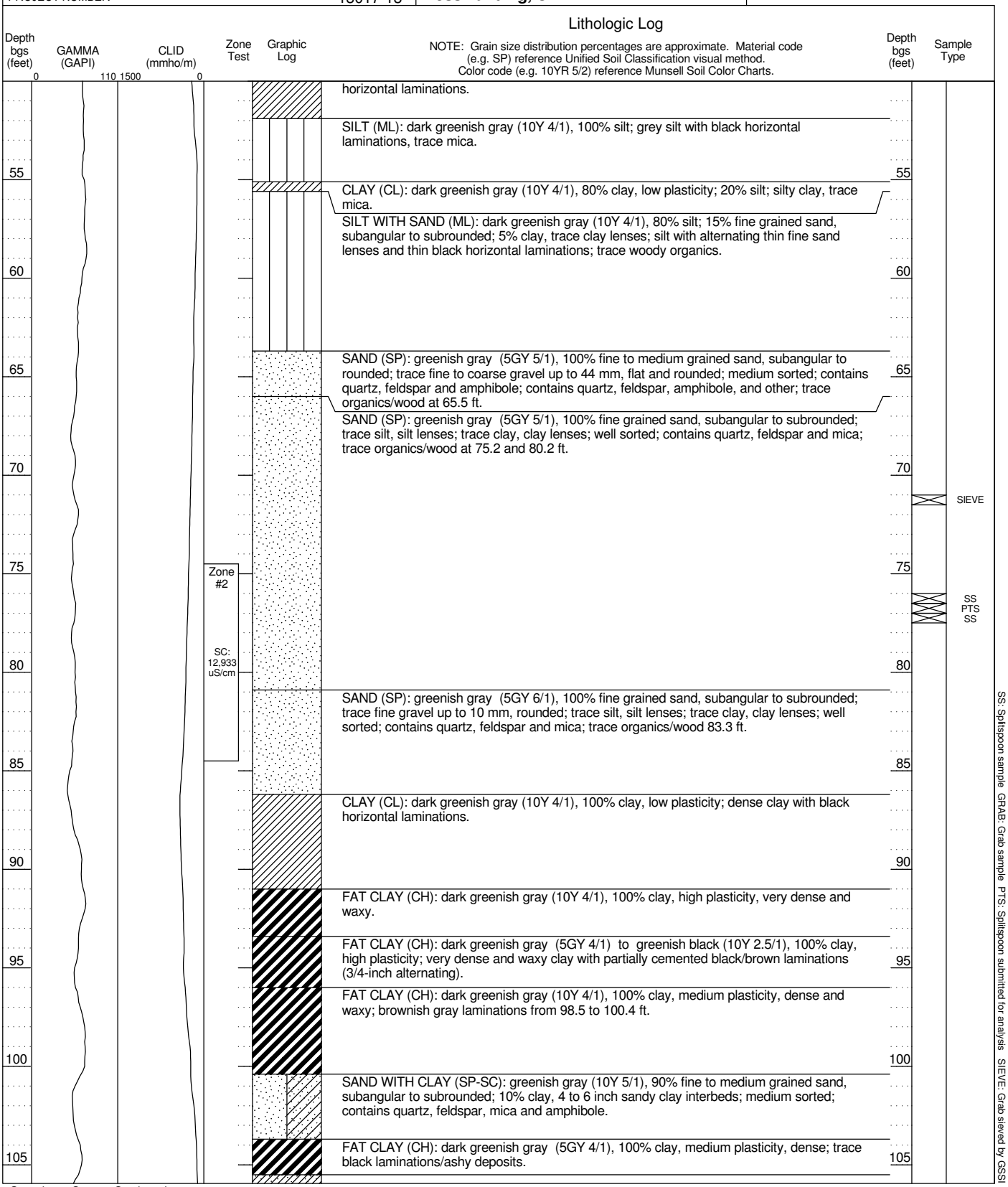

SS: Splitspoon sample GRAB: Grab sample PTS: Splitspoon submitted for analysis SIEVE: Grab sieved by GSSI

GEOSCIENCE
P.O. Box 220
Claremont, CA 91711
Telephone: (909) 451-6650
Fax: (909) 451-6638
www.gssiwater.com

BOREHOLE NAME **ML-4**

BOREHOLE LITHOLOGIC LOG (continued)

CLIENT California American Water
PROJECT NUMBER 13017-13
LOCATION **Moss Landing, CA**

Lithologic Log

NOTE: Grain size distribution percentages are approximate. Material code (e.g. SP) reference Unified Soil Classification visual method. Color code (e.g. 10YR 5/2) reference Munsell Soil Color Charts.

Depth bgs (feet)	GAMMA (GAPI) 0 110	CLID (mmho/m) 1500 0	Zone Test	Graphic Log	Lithologic Log	Depth bgs (feet)	Sample Type
					SANDY CLAY (CL): dark greenish gray (5GY 4/1), 70% clay, low plasticity; 30% fine to coarse grained sand, subangular; contains quartz and feldspar; trace small black ashy deposits; trace organics/wood at 106 ft.		
110					SAND (SP): dark greenish gray (10Y 4/1) to greenish gray (5GY 5/1), 100% fine to medium grained sand, subangular to subrounded; well sorted; contains quartz, feldspar and amphibole; trace organics/wood; high quartz content.	110	
							SIEVE
115						115	
					CLAY (CL): dark greenish gray (10G 4/1), 80% clay, low plasticity; 20% silt; trace fine grained sand, subangular to subrounded; trace small black/ashy deposits; silty clay.		
120					SAND (SP): dark greenish gray (10Y 4/1), 100% fine to medium grained sand, subangular to subrounded, predominantly fine grained; trace fine gravel up to 17 mm, subrounded to rounded; trace clay, clay lens at 119.0 ft; medium sorted; contains quartz, feldspar, mica, amphibole, and other; trace organics/wood.	120	
					CLAY (CL): dark greenish gray (5GY 4/1), 95% clay, low plasticity, silty clay; 5% fine grained sand, subangular to subrounded; contains quartz and feldspar; trace black ashy deposits.		
125					CLAYEY SAND (SC): greenish gray (10G 5/1), 70% fine grained sand, subrounded; 30% clay, medium plasticity; well sorted; contains quartz, feldspar and amphibole; alternating beds of sand and clay.	125	
					FAT CLAY (CH): very dark greenish gray (10Y 3/1), 100% clay, medium plasticity, dense.		SS PTS SS
					CLAY WITH SAND (CL): dark greenish gray (10G 4/1), 80% clay, no plasticity; 20% fine grained sand, subrounded; trace organics/wood.		
130					FAT CLAY (CH): greenish gray (10G 5/1), 100% clay, medium plasticity, dense and waxy; trace sand balls; highly altered/rusty laminations at 131.3 ft.	130	
					SAND (SP): pale yellow (2.5Y 7/3), 100% fine to medium grained sand, subangular to subrounded, predominantly fine grained, trace coarse; trace fine to coarse gravel up to 43 mm, subrounded to rounded, flat; trace silt, 2.5-inch silt at 133.8 ft; medium sorted; contains quartz, feldspar, mica, amphibole, and other; some purple colored alteration.		GRAB
135						135	
					SANDY CLAY WITH GRAVEL (CL): light yellowish brown (2.5Y 6/3), 60% clay, no plasticity; 25% fine to coarse grained sand, subangular to subrounded; 15% fine to coarse gravel up to 40 mm, subrounded to rounded; contains quartz, feldspar, mica, amphibole, and other; with visible alteration of sands.		GRAB
140					SAND (SW): light yellowish brown (2.5Y 6/3), 100% fine to coarse grained sand, subangular to rounded, predominantly medium to coarse grained; trace fine to coarse gravel up to 32 mm, rounded; poorly sorted; contains quartz, feldspar, mica, amphibole, and other.	140	
					SAND (SP): pale olive (5Y 6/3), 100% fine grained sand, subangular to subrounded, coarse grained from 138.8 to 139.2 ft; well sorted; contains quartz, feldspar, mica and amphibole; trace rust colored laminations.		
					SILT (ML): olive (5Y 5/3), 100% silt; rusty and black/ashy laminations/alteration (at 139.2 ft).		
145					SILTY SAND (SM): olive (5Y 5/3), 85% fine grained sand, subangular to subrounded; 15% silt; trace fine to coarse gravel up to 57 mm, subangular to rounded; trace clay, 1-inch clay lens at 141.3 ft; well sorted; contains quartz, feldspar and amphibole; rust colored horizontal laminations.	145	
					SILT (ML): olive (5Y 5/3), 100% silt; trace fine grained sand, subrounded; contains mica; rust colored horizontal laminations.		SS PTS SS
150					SAND (SP): light yellowish brown (2.5Y 6/3), 100% fine to coarse grained sand, subangular to rounded, predominantly fine to medium grained; trace fine to coarse gravel up to 39 mm, rounded, quartz-rich and sandstone, higher gravel content at 144.5 to 146 ft and 149.5 to 150.5 ft; poorly sorted; contains quartz, feldspar, mica, amphibole, and other; many mineral types.	150	
							SIEVE
155					SAND (SP): light yellowish brown (2.5Y 6/4), 100% fine to medium grained sand, subangular to subrounded; trace fine to coarse gravel up to 24 mm, rounded; medium sorted; contains quartz, feldspar, mica, amphibole, and other.	155	
					SAND (SP): olive (5Y 5/3), 100% fine to coarse grained sand, subangular to rounded, predominantly fine to medium grained; trace fine gravel up to 15 mm, rounded; trace clay; poorly sorted; contains quartz, feldspar, mica, amphibole, and other.		
160						160	
					SAND WITH CLAY AND GRAVEL (SW-SC): light yellowish brown (2.5Y 6/3), 65% fine to		

SS: Splitspoon sample GRAB: Grab sample PTS: Splitspoon submitted for analysis SIEVE: Grab sieved by GSSI

GEOSCIENCE
P.O. Box 220
Claremont, CA 91711
Telephone: (909) 451-6650
Fax: (909) 451-6638
www.gssiwater.com

BOREHOLE LITHOLOGIC LOG (continued)

BOREHOLE NAME	CLIENT	PROJECT NUMBER	LOCATION
ML-4	California American Water	13017-13	**Moss Landing, CA**

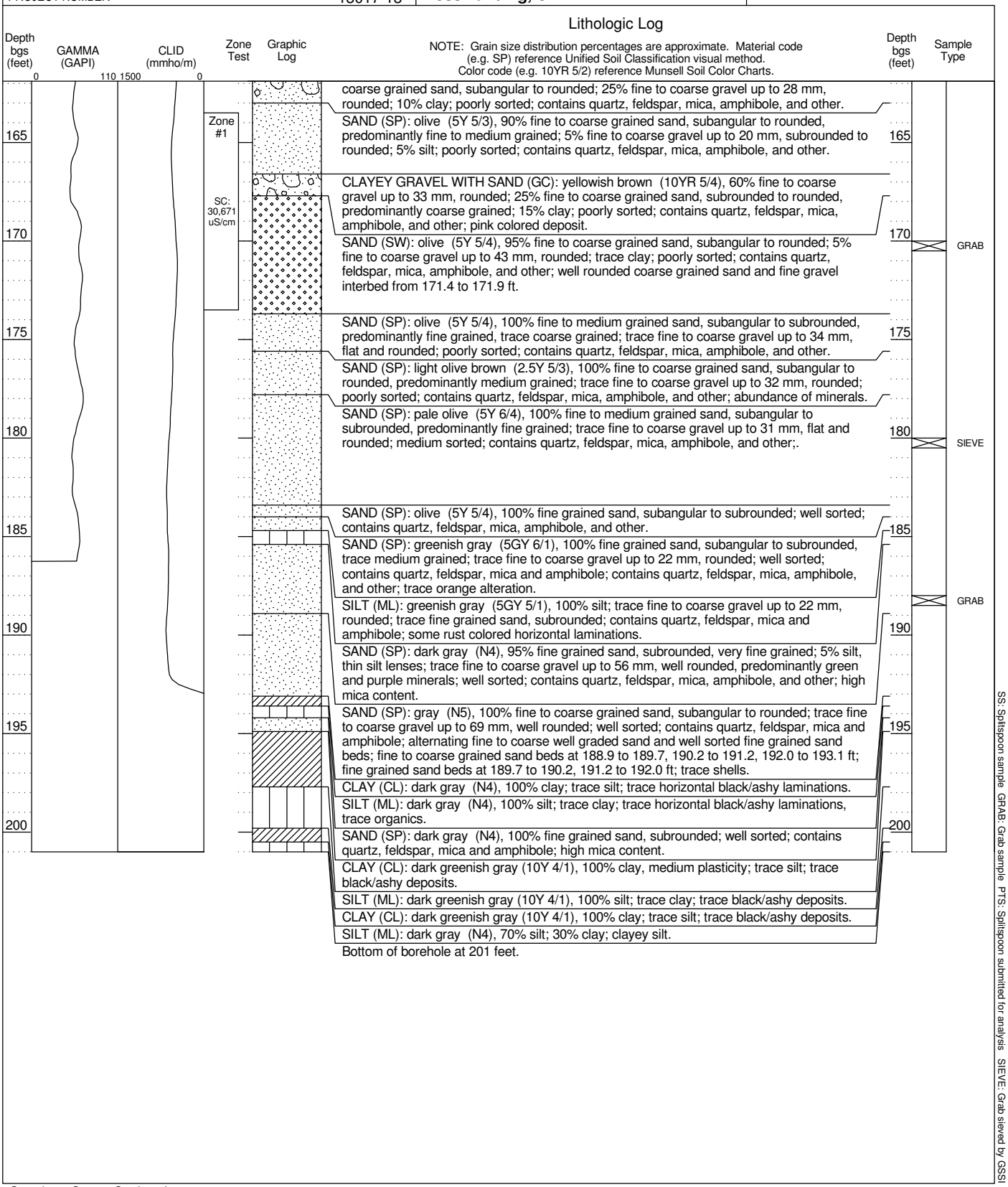

GEOSCIENCE
P.O. Box 220
Claremont, CA 91711
Telephone: (909) 451-6650
Fax: (909) 451-6638
www.gssiwater.com

BOREHOLE LITHOLOGIC LOG

BOREHOLE NAME **ML-6**					
CLIENT	California American Water	LOCATION **Moss Landing, CA** **MBARI** **36° 48' 21.4992", -121° 47' 16.0188"** **Geographic NAD83**			
PROJECT NUMBER	13017-13				
REPORT DATE	5/23/2014				
DRILLING CONTRACTOR	Cascade Drilling	LOGGED BY **N. Reynolds**			
DRILLER	Jose Munguia				
DRILLING RIG TYPE	Prosonic 600T	DRILLING METHOD	Sonic	START DATE	11/18/13
BOREHOLE DIAMETER	8 in	SURFACE ELEVATION	15.0 ft	TOTAL DEPTH	200 ft bgs
FINISH DATE	11/23/13	CORE SIZE	7 in		

Lithologic Log

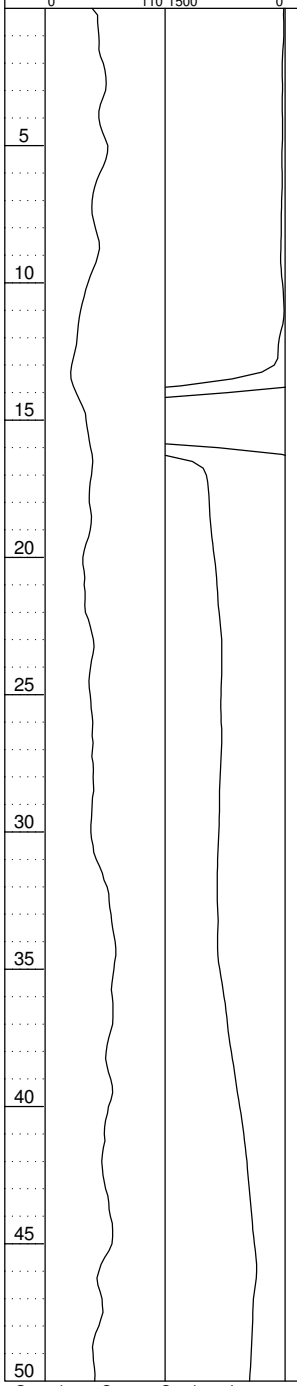

NOTE: Grain size distribution percentages are approximate. Material code (e.g. SP) reference Unified Soil Classification visual method. Color code (e.g. 10YR 5/2) reference Munsell Soil Color Charts.

Depth bgs (feet) | Sample Type

CLAYEY SAND (SC): olive (5Y 4/4), 85% fine to medium grained sand, subangular to rounded; 15% clay, sandy clay balls; trace fine gravel up to 5 mm, rounded; poorly sorted; contains quartz, feldspar, mica and amphibole; trace shells and shell fragments.

CLAYEY SAND (SC): olive (5Y 4/4), 70% fine to medium grained sand, subangular to rounded; 30% clay; trace fine to coarse gravel up to 62 mm, angular to rounded; poorly sorted; contains quartz, feldspar, mica and amphibole; contains shells. — 5

SAND (SP): olive (5Y 4/4), 100% fine to medium grained sand, subangular to subrounded; trace coarse gravel rounded, interbedded; trace silt, silt from 8.7 to 9.2 ft with high mica content and some alteration; poorly sorted; contains quartz, feldspar and amphibole. — 10

— 15

SAND (SP): olive gray (5Y 5/2), 100% fine to medium grained sand, subangular to subrounded; medium sorted; contains quartz, feldspar, mica and amphibole; altered rust and black colored sands from 22.0 to 23.5 ft. — 20

SAND (SP): olive (5Y 5/4), 95% medium to coarse grained sand, subangular to rounded; 5% fine to coarse gravel up to 40 mm, rounded; poorly sorted; contains quartz, feldspar, mica, amphibole, and other; trace shells and shell fragments. — 25

— 30

CLAY (CL): olive brown (2.5Y 4/4), 100% clay, low plasticity; with visible rust and black colored alteration.

CLAY (CL): very dark greenish gray (5GY 3/1), 100% clay, medium plasticity; trace organics, altered black and dark gray and weakly cemented from 33.7 to 34.2 ft. — 35

CLAY (CL): very dark greenish gray (5GY 3/1), 100% clay, low plasticity; dark gray/black laminations.

SILT (ML): very dark greenish gray (10Y 3/1), 95% silt; 5% fine grained sand, subrounded, very fine grained; contains mica; thin black laminations.

FAT CLAY (CH): very dark greenish gray (10Y 3/1), 100% clay, medium plasticity; trace fine grained sand, subrounded, fine sand layer at 40.2 to 40.4 ft; trace black/gray laminations, trace organics. — 40

CLAY (CL): greenish black (10Y 2.5/1), 100% clay, medium plasticity; trace silt, silt interbed at 42.4 to 42.8 ft.

CLAY (CL): olive (5Y 4/3), 100% clay, low plasticity; trace fine grained sand, subangular to subrounded; alteration visible with black/grey and brown coloration. — 45

SANDY CLAY (CL): yellowish red (5YR 4/6), 50% fine grained sand, subangular to subrounded; 50% clay; with visible rust colored alteration; sandy clay to clayey sand.

CLAY (CL): light olive brown (2.5Y 5/3), 95% clay; 5% fine grained sand, subangular to subrounded; trace silt; with visible rust colored alteration.

SAND (SP): light yellowish brown (2.5Y 6/3), 95% fine grained sand, subangular to subrounded; 5% silt; well sorted; contains quartz, feldspar, mica and amphibole; with trace — 50

SS: Splitspoon sample GRAB: Grab sample PTS: Splitspoon submitted for analysis SIEVE: Grab sieved by GSSI

GEOSCIENCE
P.O. Box 220
Claremont, CA 91711
Telephone: (909) 451-6650
Fax: (909) 451-6638
www.gssiwater.com

BOREHOLE NAME **ML-6**

BOREHOLE LITHOLOGIC LOG (continued)

CLIENT California American Water
PROJECT NUMBER 13017-13
LOCATION **Moss Landing, CA**

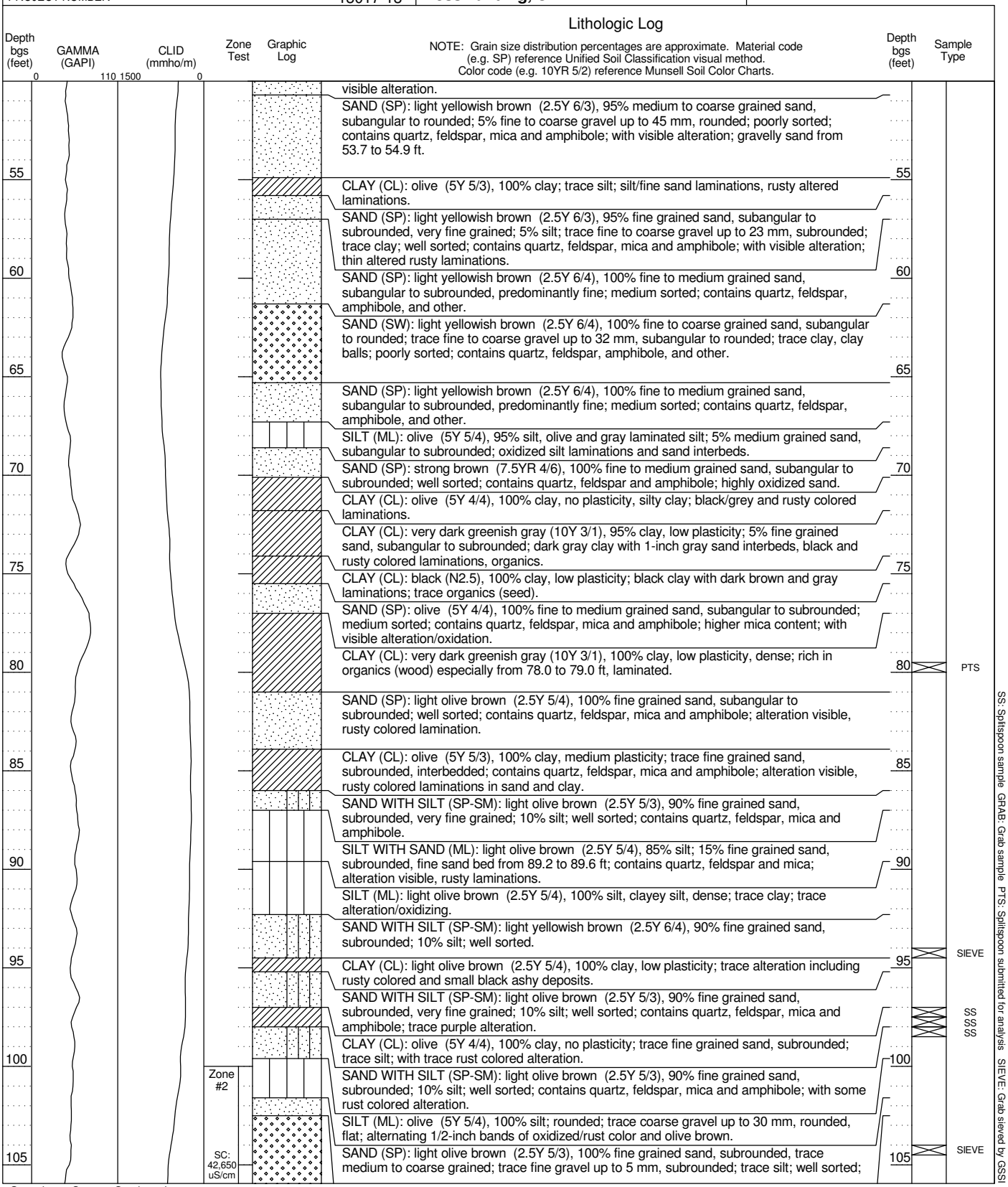

GEOSCIENCE
P.O. Box 220
Claremont, CA 91711
Telephone: (909) 451-6650
Fax: (909) 451-6638
www.gssiwater.com

BOREHOLE LITHOLOGIC LOG (continued)

BOREHOLE NAME	CLIENT	LOCATION
ML-6	California American Water	**Moss Landing, CA**
	PROJECT NUMBER 13017-13	

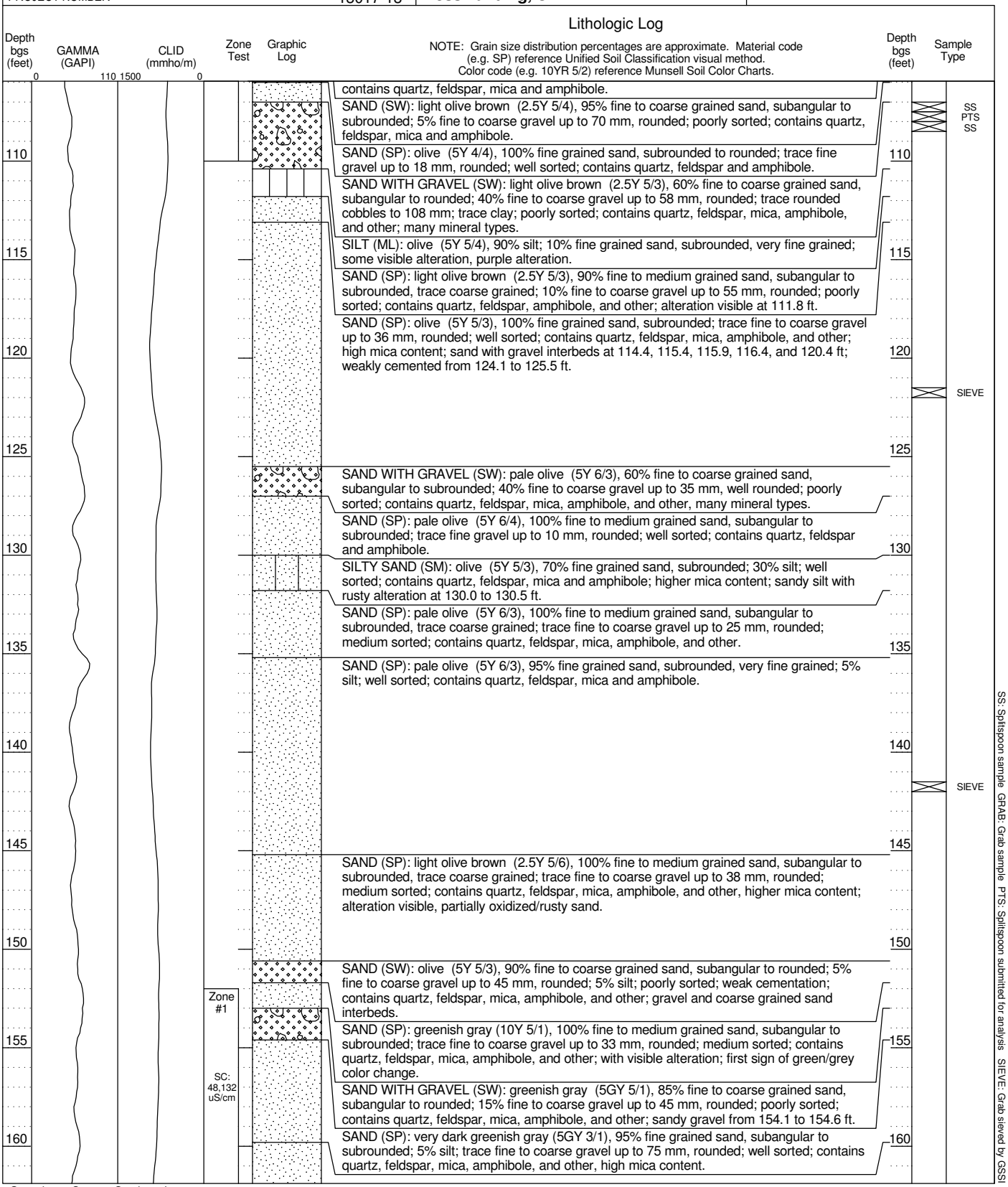

GEOSCIENCE
P.O. Box 220
Claremont, CA 91711
Telephone: (909) 451-6650
Fax: (909) 451-6638
www.gssiwater.com

BOREHOLE LITHOLOGIC LOG (continued)

BOREHOLE NAME	CLIENT	LOCATION
ML-6	California American Water	**Moss Landing, CA**
	PROJECT NUMBER 13017-13	

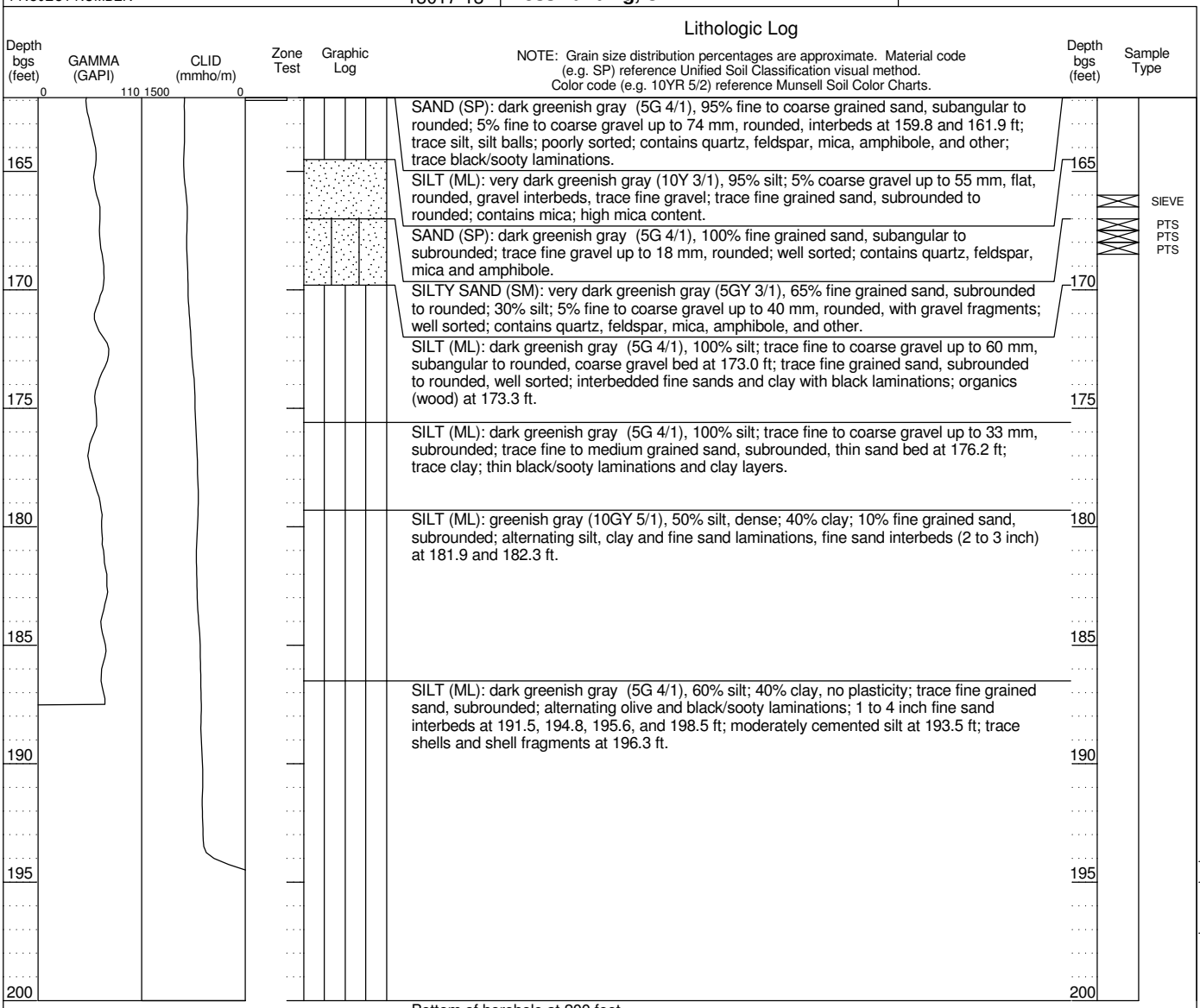

SS: Splitspoon sample GRAB: Grab sample PTS: Splitspoon submitted for analysis SIEVE: Grab sieved by GSSI

GEOSCIENCE
P.O. Box 220
Claremont, CA 91711
Telephone: (909) 451-6650
Fax: (909) 451-6638
www.gssiwater.com

BOREHOLE LITHOLOGIC LOG

BOREHOLE NAME: **PR-1**			
CLIENT: California American Water		LOCATION: **Castroville, CA**	
PROJECT NUMBER: 13017-13		**Potrero Rd**	
REPORT DATE: 5/23/2014		**36° 47' 25.9368", -121° 47' 30.7248"** **Geographic NAD83**	
DRILLING CONTRACTOR: Cascade Drilling		LOGGED BY: **B. Villalobos**	
DRILLER: Jose Munguia			
DRILLING RIG TYPE: Prosonic 600T	DRILLING METHOD: Sonic	START DATE: 9/21/13	BOREHOLE DIAMETER: 8 in
SURFACE ELEVATION: 9.0 ft	TOTAL DEPTH: 201.5 ft bgs	FINISH DATE: 9/25/13	CORE SIZE: 6 in

Lithologic Log

Depth bgs (feet)	GAMMA (GAPI) 0 110	CLID (mmho/m) 1500 0	Zone Test	Graphic Log	NOTE: Grain size distribution percentages are approximate. Material code (e.g. SP) reference Unified Soil Classification visual method. Color code (e.g. 10YR 5/2) reference Munsell Soil Color Charts.	Depth bgs (feet)	Sample Type
					NO SAMPLE.		
5						5	
10						10	
					SAND (SP): brown (7.5YR 5/3), 100% fine to medium grained sand, subangular to subrounded; poorly sorted; moist sample.		
					SILTY SAND (SM): dark brown (10YR 3/3), 80% fine to medium grained sand, subangular to subrounded; 20% silt; poorly sorted; moist sample.		
15						15	
					SANDY CLAY (CL): greenish black (5GY 2.5/1), 70% clay, organic clay; 30% fine grained sand, subrounded, very fine grained; moist sample; contains quartz, feldspar, mica and amphibole.		
					SAND (SP): brown (7.5YR 5/3), 95% medium to coarse grained sand, subangular to subrounded; 5% fine gravel up to 5 mm, subangular to subrounded; poorly sorted; contains quartz, feldspar, mica and amphibole.		
20						20	
					SILTY SAND (SM): dark greenish gray (5GB 4/1), 80% fine grained sand, subangular to subrounded, very fine grained; 20% silt; well sorted; moist sample.		
					NO SAMPLE.		
25						25	
					SAND (SP): dark greenish gray (5GB 4/1), 100% medium to coarse grained sand, subangular to subrounded; poorly sorted; moist sample.		
					SILTY SAND (SM): dark greenish gray (5GB 4/1), 85% fine to medium grained sand, subangular to subrounded; 15% silt; trace fine gravel up to 5 mm; poorly sorted; few clayey silt beds.		
30						30	
					SAND (SP): light olive brown (2.5Y 5/4), 100% medium to coarse grained sand, subangular to subrounded; trace fine gravel up to 5 mm; poorly sorted; moist sample.		
					SAND (SP): dark olive gray (5Y 3/2), 100% fine grained sand, subangular to subrounded; well sorted; moist sample.		
					SANDY SILT (ML): dark greenish gray (5GB 4/1), 70% silt; 30% fine grained sand, subangular to subrounded, very fine grained; moist to wet sample; contains mica.		
35					SILT (MH): dark greenish gray (5GB 4/1), 90% silt, organic silt; 10% fine grained sand, subangular to subrounded, very fine grained; moist to wet sample; contains mica.	35	
					SAND (SP): dark greenish gray (5GB 4/1), 100% medium grained sand, subangular to subrounded; well sorted; moist to wet sample; contains quartz and feldspar.		
40					CLAY (CL): dark greenish gray (5GB 4/1), 80% clay, medium plasticity; 20% silt; moist sample; moderately firm; massive; few 3 mm black organic stringers.	40	
					SILTY SAND (SM): dark greenish gray (5GB 4/1), 80% medium to coarse grained sand, subangular to subrounded; 20% silt; trace fine gravel up to 5 mm; poorly sorted; moist to wet sample; contains quartz, feldspar, mica and amphibole; abundant shell fragments including 1 inch bi-valve shells.		
45						45	
50						50	

SS: Splitspoon sample GRAB: Grab sample PTS: Splitspoon submitted for analysis SIEVE: Grab sieved by GSSI

Geoscience Support Services, Inc.

GEOSCIENCE
P.O. Box 220
Claremont, CA 91711
Telephone: (909) 451-6650
Fax: (909) 451-6638
www.gssiwater.com

BOREHOLE LITHOLOGIC LOG (continued)

BOREHOLE NAME	CLIENT	PROJECT NUMBER	LOCATION
PR-1	California American Water	13017-13	**Castroville, CA**

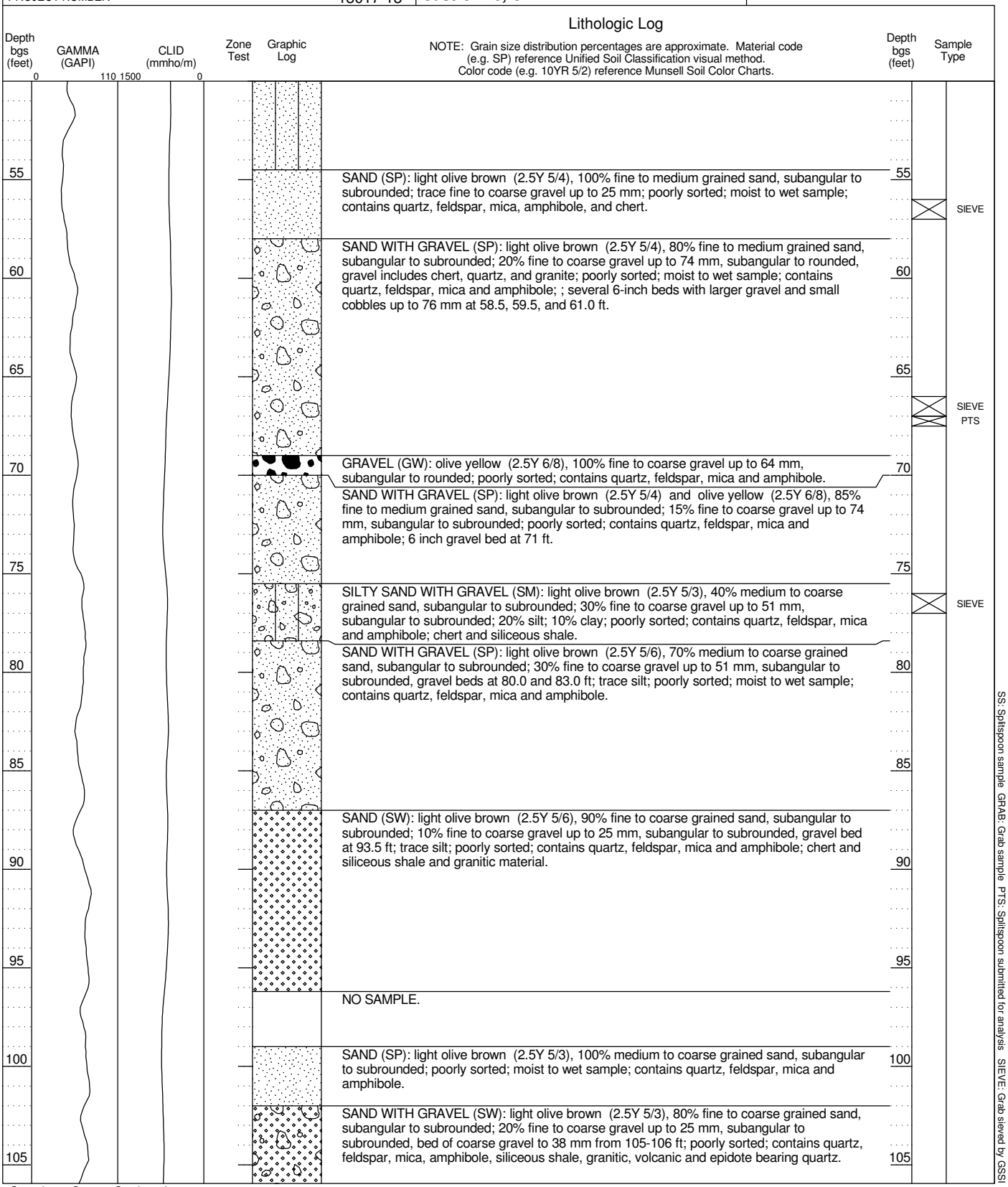

GEOSCIENCE
P.O. Box 220
Claremont, CA 91711
Telephone: (909) 451-6650
Fax: (909) 451-6638
www.gssiwater.com

BOREHOLE LITHOLOGIC LOG (continued)

BOREHOLE NAME	CLIENT	PROJECT NUMBER	LOCATION
PR-1	California American Water	13017-13	**Castroville, CA**

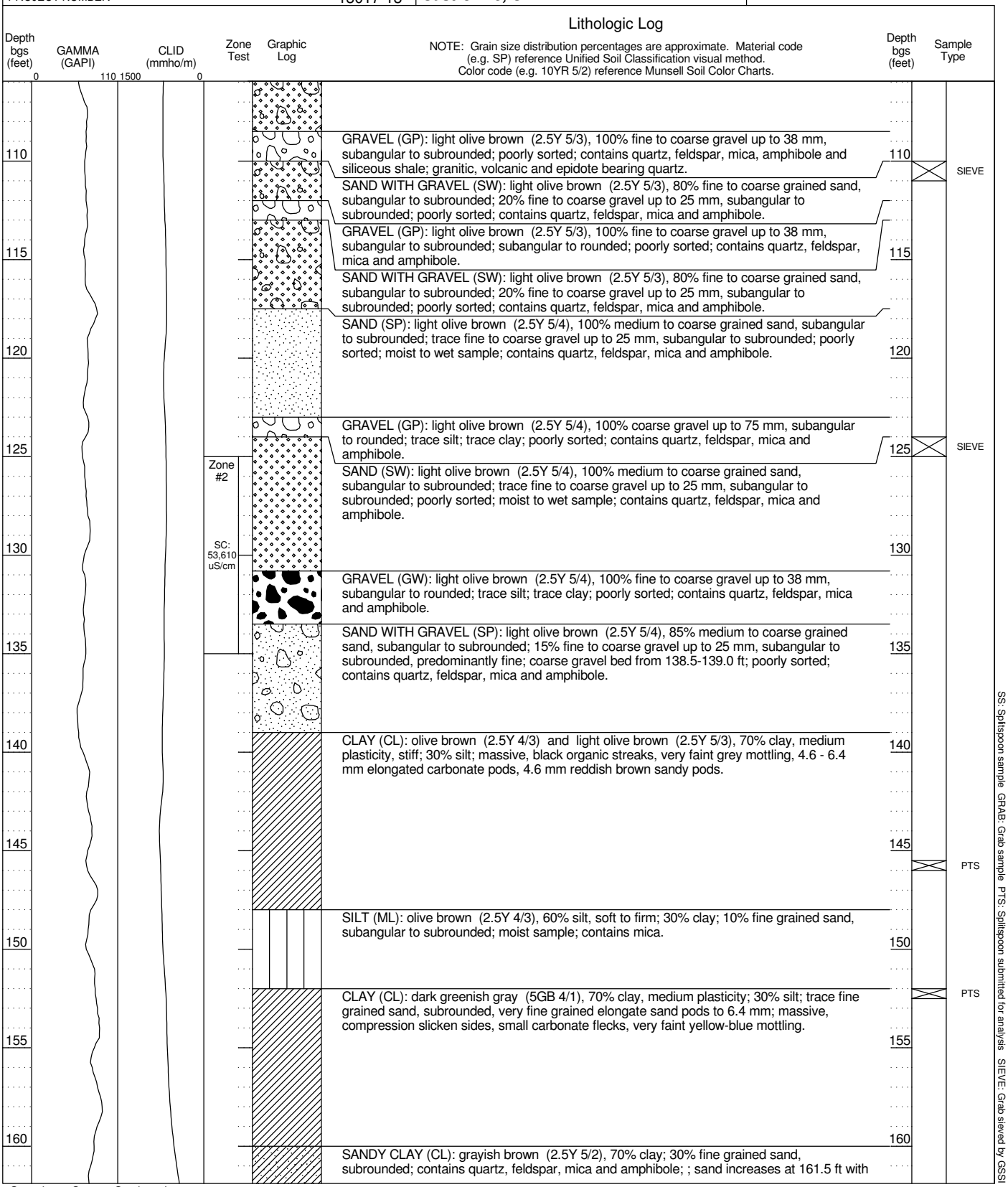

GEOSCIENCE
P.O. Box 220
Claremont, CA 91711
Telephone: (909) 451-6650
Fax: (909) 451-6638
www.gssiwater.com

BOREHOLE LITHOLOGIC LOG (continued)

BOREHOLE NAME	CLIENT	PROJECT NUMBER	LOCATION
PR-1	California American Water	13017-13	**Castroville, CA**

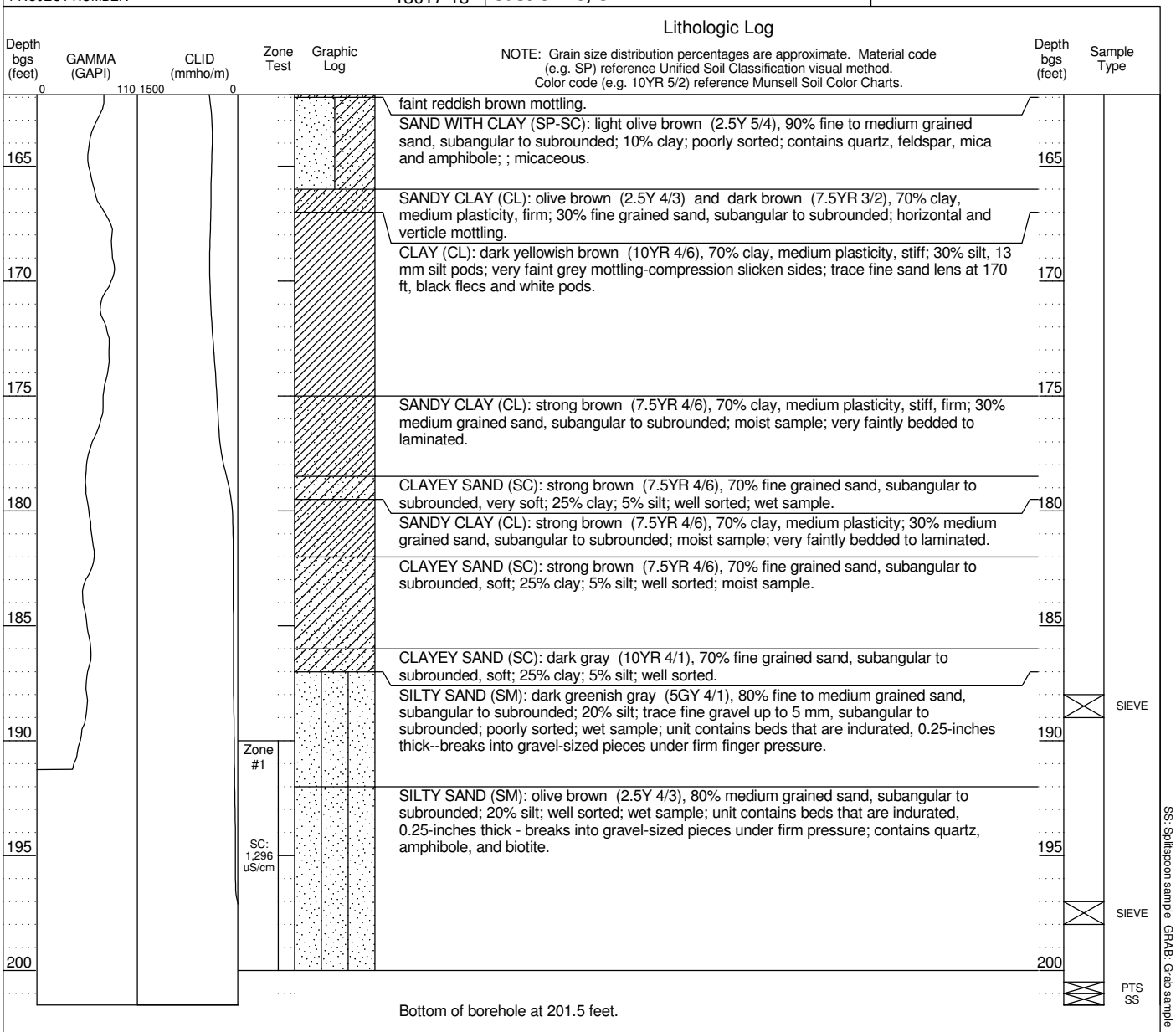

Bottom of borehole at 201.5 feet.

SS: Splitspoon sample GRAB: Grab sample PTS: Splitspoon submitted for analysis SIEVE: Grab sieved by GSSI

APPENDIX A2

Well Logs Used for Cross-Sections

GEOSCIENCE

APPENDIX A2:

WELL LOGS USED FOR CROSS-SECTIONS

CONTENTS

Description **Page**

13S/1E-36H (Monterey Dunes Colony Well) *A2-1*

14S/1E-24L2-5 (DMW1) *A2-3*

14S/2E-6L1 ..... *A2-4*

14S/2E-17K1 ..... *A2-6*

14S/2E-17L1 ..... *A2-7*

14S/2E-18E1 ..... *A2-8*

14S/2E-20B3 (?) *A2-9*

14S/2E-21E1 ..... *A2-11*

14S/2E-21F2 ..... *A2-11*

Borehole TH-1 ..... *A2-14*

Borehole TH-2 ..... *A2-15*

Borehole TH-3 ..... *A2-16*

ORIGINAL
File with DWR

Page 1 of 2

Owner's Well No. #4

Date Work Began 01/24/04 , Ended 03/10/04

Local Permit Agency Monterey Dunes Health Dept.

Permit No. 03-01231 Permit Date 11/18/03

STATE OF CALIFORNIA
WELL COMPLETION REPORT
Refer to Instruction Pamphlet

No. e011049

DWR USE ONLY — DO NOT FILL IN
STATE WELL NO./STATION NO.
LATITUDE LONGITUDE
APN/TRS/OTHER

GEOLOGIC LOG

ORIENTATION (∠) X VERTICAL ___ HORIZONTAL ___ ANGLE ___ (SPECIFY)
DRILLING METHOD Direct Rotary FLUID Bentonite

DEPTH FROM SURFACE Ft. to Ft.	DESCRIPTION *Describe material, grain size, color, etc.*
0 80	Fine to course sand
80 90	Fine to course sand w/blue clay
90 100	Fine to med. sand
100 123	Fine to med. sand w/clay lenses
123 143	Blue clay w/fine to med. sand
143 154	Blue clay w/fine to course sand and gravel
154 165	Fine to course sand w/gravel and rock
165 187	Fine to med. sand & cobbles with clay lenses
187 197	Fine to med. sand
197 219	Fine to course sand
219 250	Fine to course sand & gravel
250 304	Fine to course sand & cobbles
304 314	Fine to course sand w/clay and cobbles
314 355	Fine to course sand w/90% clay
355 366	Fine to course sand w/clay
366 387	Fine to med. sand w/clay lenses
387 408	Fine to med. sand w/50% clay
408 418	Fine to course sand
418 440	Fine to course sand & gravel
440 455	Fine to course sand w/40% clay
455 461	Fine to course sand & gravel with 50% clay
461 485	Fine to course sand & gravel
485 505	Fine to course sand
505 556	Fine to course sand & gravel
556 577	Fine to course sand w/red clay

TOTAL DEPTH OF BORING: 1422 (Feet)
TOTAL DEPTH OF COMPLETED WELL 1364 (Feet)

WELL OWNER
Name Monterey Dunes Colony
Mailing Address 195 Monterey Dunes Way
City Castroville STATE CA ZIP 95012

WELL LOCATION
Address 195 Monterey Dunes Way
City Castroville
County Monterey
APN Book 229 Page 041 Parcel 004
Township ___ Range ___ Section ___
Latitude ___ DEG. ___ MIN. ___ SEC. NORTH
Longitude ___ DEG. ___ MIN. ___ SEC. WEST

LOCATION SKETCH

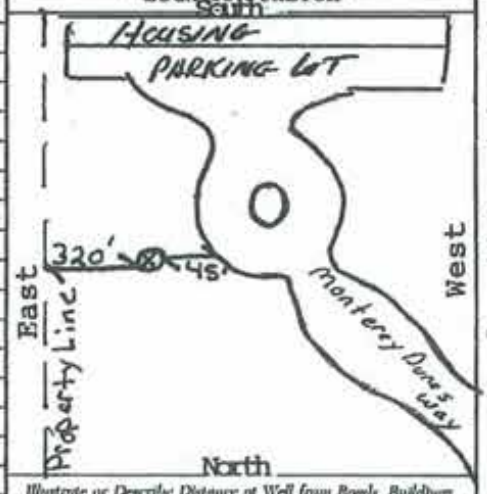

Illustrate or Describe Distance of Well from Roads, Buildings, Fences, Rivers, etc. and attach a map. Use additional paper if necessary. PLEASE BE ACCURATE & COMPLETE.

ACTIVITY (∠)
X NEW WELL
MODIFICATION/REPAIR
___ Deepen
___ Other (Specify)
___ DESTROY (Describe Procedures and Materials Under "GEOLOGIC LOG")

PLANNED USES (∠)
WATER SUPPLY
___ Domestic ___ Public
___ Irrigation ___ Industrial
MONITORING ___
TEST WELL ___
CATHODIC PROTECTION ___
HEAT EXCHANGE ___
DIRECT PUSH ___
INJECTION ___
VAPOR EXTRACTION ___
SPARGING ___
REMEDIATION ___
OTHER (SPECIFY) ___

WATER LEVEL & YIELD OF COMPLETED WELL
DEPTH TO FIRST WATER N/A (Ft.) BELOW SURFACE
DEPTH OF STATIC WATER LEVEL 13 (Ft.) & DATE MEASURED 03/04/04
ESTIMATED YIELD * 200 (GPM) & TEST TYPE Pump
TEST LENGTH 24 (Hrs.) TOTAL DRAWDOWN 42 (Ft.)
* *May not be representative of a well's long-term yield.* 24 hour Test

CASING (S)

DEPTH FROM SURFACE Ft. to Ft.	BORE-HOLE DIA. (inches)	TYPE (∠) BLANK	SCREEN	CONDUCTOR	FILL PIPE	MATERIAL / GRADE	INTERNAL DIAMETER (inches)	GAUGE OR WALL THICKNESS	SLOT SIZE IF ANY (inches)
0 60	36			x		A53B	29.260	.375	
0 321	28			x		A53B	19.260	.375	
+2 1221	18	x				A53B	8"	.322	
1221 1301	18	x				304ss	8"	.322	
1301 1361	18		x			304ss	8"	XXHD	.040
1361 1364	18	x				304ss	8"	.322	

ANNULAR MATERIAL

DEPTH FROM SURFACE Ft. to Ft.	TYPE CEMENT (∠)	BENTONITE (∠)	FILL (∠)	FILTER PACK (TYPE/SIZE)
0 60	x			10 sack
0 321	x			10 sack
0 1220	x			Neat cem.
1220 1370			x	8x16

ATTACHMENTS (∠)
___ Geologic Log
___ Well Construction Diagram
X Geophysical Log(s)
___ Soil/Water Chemical Analyses
X Other Site map
ATTACH ADDITIONAL INFORMATION, IF IT EXISTS.

CERTIFICATION STATEMENT
I, the undersigned, certify that this report is complete and accurate to the best of my knowledge and belief.

NAME Rottman Drilling Co.
(PERSON, FIRM, OR CORPORATION) (TYPED OR PRINTED)

46471 N Division, Lancaster, CA 93535
ADDRESS CITY STATE ZIP

Signed Larry W. Rottman, President 03/19/04 316599
(WELL DRILLER/AUTHORIZED REPRESENTATIVE) DATE SIGNED C-57 LICENSE NUMBER

DWR 188 REV. 11-97

IF ADDITIONAL SPACE IS NEEDED, USE NEXT CONSECUTIVELY NUMBERED FORM

ORIGINAL
File with DWR

Page 2 of 2

Owner's Well No. #4

Date Work Began 01/24/04 , Ended 03/10/04

Local Permit Agency Monterey Dunes Health Dept.

Permit No. 03-01231 Permit Date 11/18/03

STATE OF CALIFORNIA
WELL COMPLETION REPORT
Refer to Instruction Pamphlet

No. e011049

DWR USE ONLY — DO NOT FILL IN
STATE WELL NO./STATION NO.
LATITUDE LONGITUDE
APN/TRS/OTHER

GEOLOGIC LOG

ORIENTATION (✓) X VERTICAL ___ HORIZONTAL ___ ANGLE ___ (SPECIFY)
DRILLING METHOD Direct Rotary FLUID Bentonite

DEPTH FROM SURFACE Ft.	to Ft.	DESCRIPTION *Describe material, grain size, color, etc.*
		lenses
577	610	Fine to course sand, rock & clay
610	620	Fine to course sand
620	630	Fine to course sand & gravel
630	650	Fine to course sand & gravel with clay lenses
650	661	Fine to med. sand with clay
661	681	Fine sand with clay
681	693	Fine sand & gravel w/clay lenses
693	725	80% Silty clay w/20% hard sand
725	737	90% Hard silty clay & sand lenses
737	767	90% Hard silty clay w/sand rock lenses
767	791	95% Hard packed clay - cemented
791	820	Brown silty clay (hard packed)
820	882	Grayish brown clay w/blue stricks
882	945	Clay with rock
945	1011	Clay w/fine sand & silt
1011	1105	20% Clay w/fine to med. sand
1105	1170	Fine sand and silt
1170	1190	Clay w/fine sand, silt & rock
1190	1230	Fine sand, silt & rock
1230	1270	Clay with fine sand
1270	1290	Silt & clay
1290	1365	Fine sand
1365	1391	Clay w/fine sand lenses
1391	1422	Fine sand

TOTAL DEPTH OF BORING: 1422 (Feet)
TOTAL DEPTH OF COMPLETED WELL 1364 (Feet)

WELL OWNER

Name Monterey Dunes Colony
Mailing Address 195 Monterey Dunes Way
City Castroville, CA 95012 STATE ZIP

WELL LOCATION

Address 195 Monterey Dunes Way
City Castroville
County Monterey
APN Book 229 Page 041 Parcel 004
Township ___ Range ___ Section ___
Latitude ___ DEG. ___ MIN. ___ SEC. NORTH
Longitude ___ DEG. ___ MIN. ___ SEC. WEST

LOCATION SKETCH

NORTH / WEST / EAST / SOUTH

Illustrate or Describe Distance of Well from Roads, Buildings, Fences, Rivers, etc. and attach a map. Use additional paper if necessary. PLEASE BE ACCURATE & COMPLETE.

ACTIVITY (✓)

X NEW WELL
MODIFICATION/REPAIR
___ Deepen
___ Other (Specify)
___ DESTROY (Describe Procedures and Materials Under "GEOLOGIC LOG")

PLANNED USES (✓)

WATER SUPPLY
___ Domestic ___ Public
___ Irrigation ___ Industrial
MONITORING ___
TEST WELL ___
CATHODIC PROTECTION ___
HEAT EXCHANGE ___
DIRECT PUSH ___
INJECTION ___
VAPOR EXTRACTION ___
SPARGING ___
REMEDIATION ___
OTHER (SPECIFY) ___

WATER LEVEL & YIELD OF COMPLETED WELL

DEPTH TO FIRST WATER 12 (Ft.) BELOW SURFACE
DEPTH OF STATIC WATER LEVEL 13 (Ft.) & DATE MEASURED 03/02/04
ESTIMATED YIELD * 500 (GPM) & TEST TYPE Pump
TEST LENGTH 4 (Hrs.) TOTAL DRAWDOWN 102 (Ft.)
* *May not be representative of a well's long-term yield.* (Step Test)

CASING (S)

DEPTH FROM SURFACE Ft.	to Ft.	BORE-HOLE DIA. (Inches)	TYPE (✓) BLANK	SCREEN	CONDUCTOR	FILL PIPE	MATERIAL / GRADE	INTERNAL DIAMETER (Inches)	GAUGE OR WALL THICKNESS	SLOT SIZE IF ANY (Inches)
0	60	36			x		A53B	29.260	.375	
0	321	28			x		A53B	19.260	.375	
+2	1221	18	x				A53B	8"	.322	
1221	1301	18	x				304ss	8"	.322	
1301	1361	18		x			304ss	8"	XXHD	.040
1361	1364	18	x				304ss	8"	.322	

ANNULAR MATERIAL

DEPTH FROM SURFACE Ft.	to Ft.	TYPE CEMENT (✓)	BENTONITE (✓)	FILL (✓)	FILTER PACK (TYPE/SIZE)
0	60	x			10 sack
0	321	x			10 sack
0	1220	x			Neat cem.
1220	1370			x	8x16

ATTACHMENTS (✓)

___ Geologic Log
___ Well Construction Diagram
X Geophysical Log(s)
___ Soil/Water Chemical Analyses
___ Other ___

ATTACH ADDITIONAL INFORMATION, IF IT EXISTS.

CERTIFICATION STATEMENT

I, the undersigned, certify that this report is complete and accurate to the best of my knowledge and belief.

NAME Rottman Drilling Co.
(PERSON, FIRM, OR CORPORATION) (TYPED OR PRINTED)

46471 N Division, Lancaster, CA 93535
ADDRESS CITY STATE ZIP

Signed Laura Rottman Pres.
(WELL DRILLER/AUTHORIZED REPRESENTATIVE)

03/19/04 (DATE SIGNED)

316599 (C-57 LICENSE NUMBER)

DWR 188 REV. 11-97

IF ADDITIONAL SPACE IS NEEDED, USE NEXT CONSECUTIVELY NUMBERED FORM

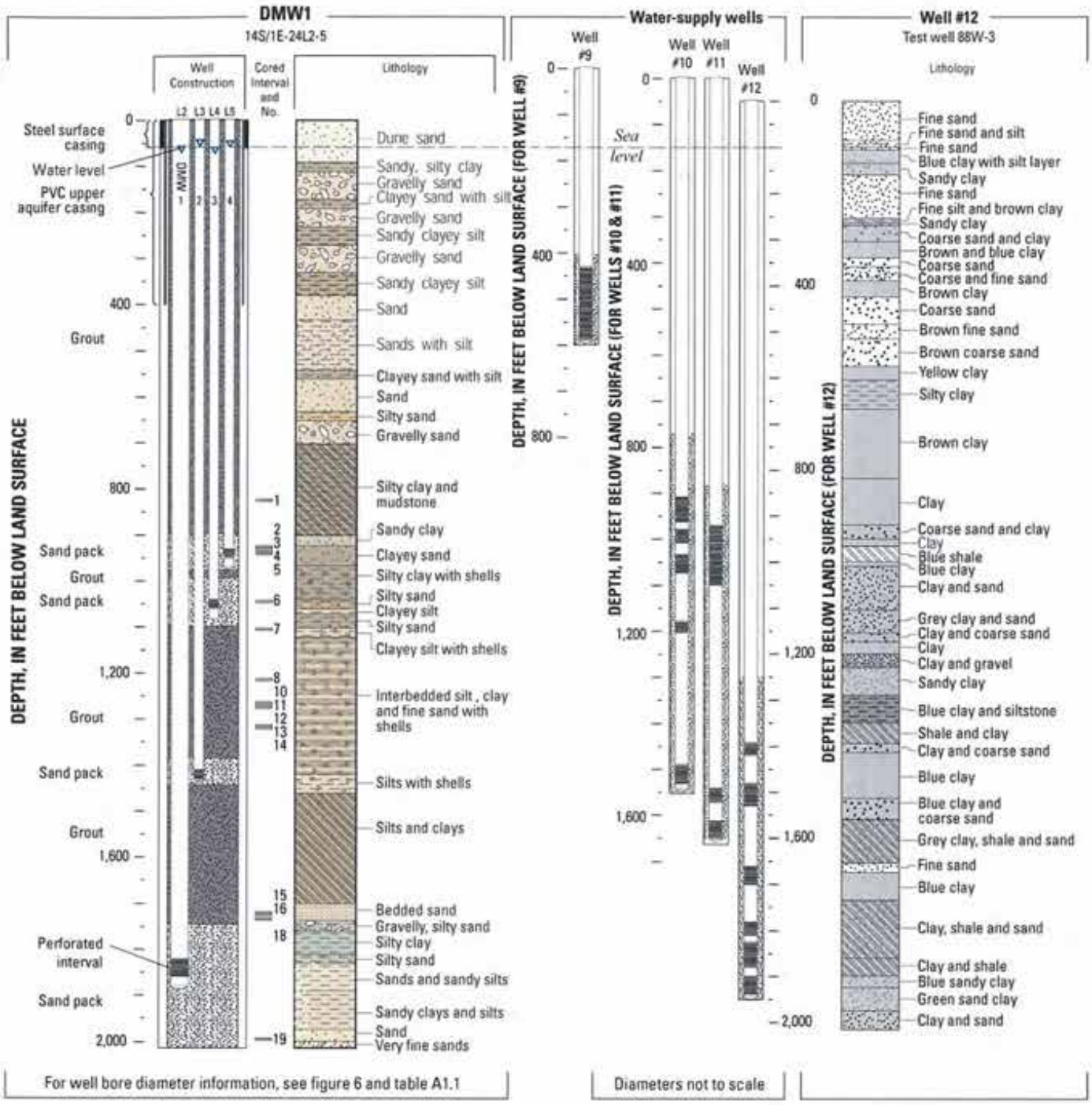

Figure 3. Well construction and lithology for the deep-aquifer monitoring well and selected nearby water-supply wells, Marina, California.

Dennis Haugan

PLICATE Gene Taylor
tain copy

STATE OF CALIFORNIA
THE RESOURCES AGENCY
DEPARTMENT OF WATER RESOURCES

WATER WELL DRILLERS REPORT

Appendix A2
Do Not Fill In

№ 141763

State Well No. 14S/ZE-6L1

Other Well No.

) OWNER:

me Monterey County Flood Control Dist.
dress County Courthouse
Salinas, Ca. 93901

) LOCATION OF WELL:

nty Monterey Owner's number, if any
nship, Range, and Section Mulligan Hill
tance from cities, roads, railroads, etc. See attached map

) TYPE OF WORK *(check)*:

w Well [x] Deepening [ ] Reconditioning [ ] Destroying [ ]
destruction, describe material and procedure in Item 11.

4) PROPOSED USE *(check)*:

Domestic [ ] Industrial [ ] Municipal [ ]
rrigation [ ] Test Well [ ] Other [x]

(5) EQUIPMENT:

Rotary [x]
Cable [ ]
Other [ ]

6) CASING INSTALLED:

STEEL: OTHER
SINGLE [x] DOUBLE [ ]

From ft.	To ft.	Diam.	Gage or Wall	Diameter of Bore	If gravel packed From ft.	To ft.
	600'	16	3/8	28-1/2	0	600
600	603	16	2 reducer	26	600	603
603	1563	12"	3/16	26	603	1563

Size of shoe or well ring: Size of gravel Spec sand

Describe joint Weld

(7) PERFORATIONS OR SCREEN:

Type of perforation or name of screen Chump

From ft.	To ft.	Perf. per row	Rows per ft.	Size in. x in.
~~860~~ 880 per Dick	1540			3/32 Horz. Louvre Full Flo

(8) CONSTRUCTION:

Was a surface sanitary seal provided? Yes [x] No [ ] To what depth 800 ft.
Were any strata sealed against pollution? Yes [x] No [ ] If yes, note depth of strata
From ft. to ft.
From ft. to ft.
Method of sealing Concrete and 30" steel conductor 100'

(9) WATER LEVELS:

Depth at which water was first found, if known ft.
Standing level before perforating, if known ft.
Standing level after perforating and developing ft.

WELL TESTS:

Was pump test made? Yes [ ] No [ ] If yes, by whom?
gal./min. with ft. drawdown after hrs.
Temperature of water Was a chemical analysis made? Yes [ ] No [ ]
Was electric log made of well? Yes [x] No [ ] If yes, attach copy

(11) WELL LOG:

Total depth 1809 ft. Depth of completed well 1560 ft.

Formation. *Describe by color, character, size of material, and structure*

0 ft. to 6 Top Soil ft.

6' - 15'	Blue sandy clay
15' - 32'	Fine blue sand
32' - 60'	Blue clay w/sea shell
60' - 75'	Blue soft sand
75' - 100'	Blue clay
100' - 184'	Blue clay & sand streak
184' - 278'	Coarse sand & gravel
278' - 300'	Yellow Clay
300' - 330'	Blue clay
330' - 360'	Coarse yellow sand, streak of clay
360' - 434'	Yellow clay, streaks blue & brown shale
434' - 440'	Yellow clay, streaks blue & brown shale
440' - 490'	White coarse sand
490' - 528'	Blue clay
528' - 590'	Sand & gravel, streak clay
590' - 610'	Yellow Clay
610' - 621'	Sand & gravel
621' - 715'	Yellow clay w/streak of sand
715' - 747'	Yellow clay w/streak gravel
747' - 778'	Yellow clay w/streak gravel
778' - 795'	yellow clay w/streak gravel blue clay
795' - 840'	Yellow clay w/streak gravel blue clay
840' - 872'	Blue clay
872' - 903'	Blue clay
903' - 934'	Brown clay
934' - 965'	Hard brown clay & shale
965' - 997'	Hard brown clay & shale
997' - 1028'	Hard brown clay & shale
1028' - 1059'	Blue clay
1059' - 1090'	Blue & brown clay

Work started 9/20 19 76 Completed 11/12 19 76

PERF'S

WELL DRILLER'S STATEMENT:

This well was drilled under my jurisdiction and this report is true to the best of my knowledge and belief.

NAME Salinas Pump Co.
(Person, firm or corporation) (Typed or printed)

Address 1128 Madison Lane
Salinas, Ca. 93901

[SIGNED] [signature]
(Well Driller)

License No. 273053 Dated , 19

SKETCH LOCATION OF WELL ON REVERSE SIDE

OVER
CONTINUED ON BACK

6-72 30M TRIP OFF

145/2E-6L1

WELL LOCATION SKETCH

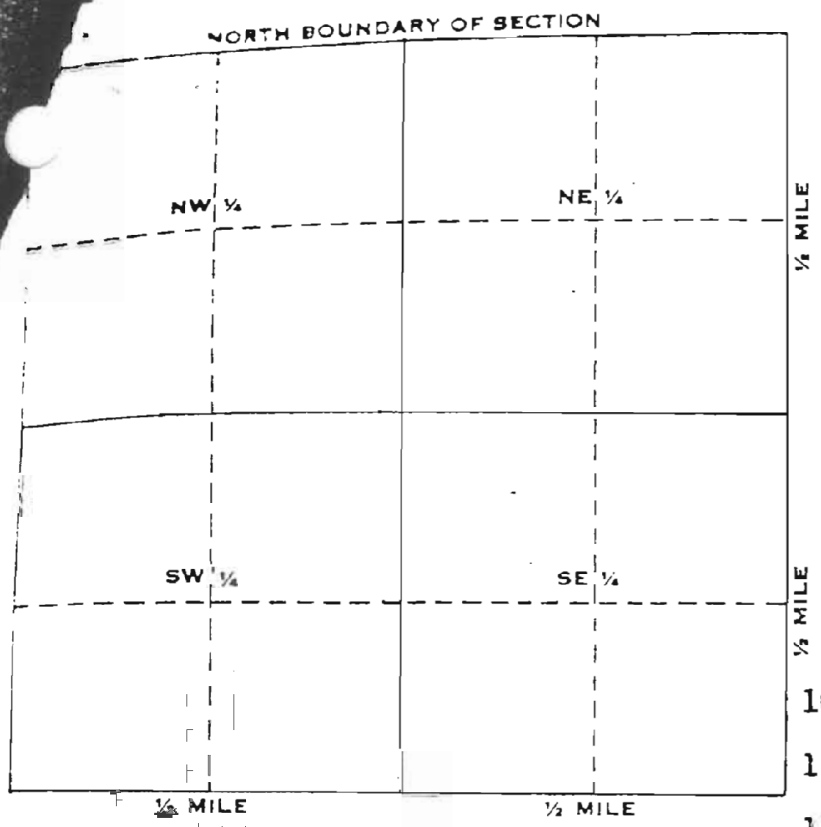

A. Location of well in sectionized areas.
Sketch roads, railroads, streams, or other features as necessary.

Township 14 N/S

Range 2 E/W

Section No. 6L1

1090'	- 1122'	Blue & brown shaley clay
1122'	- 1153'	Blue & brown shaley clay
1153'	- 1184'	Blue shaley clay with streak hard sandstone
1184'	- 1247'	Blue shale streak sand
1247'	- 1300'	Blue clay, streak sand
1300'	- 1340'	Blue clay streak sand
1340'	- 1372'	blue clay & shale
1372'	- 1403'	Blue clay, strk gravel & sand
1403'	- 1435'	Strk gravel & sand
1435'	- 1466'	Strk gravel & sand
1466'	- 1498'	Strk gravel & sand
1498'	- 1529'	Strk gravel & sand
1529'	- 1561'	Strk gravel & sand 1545'
1561'	- 1592'	Strk gravel & sand
1592'	- 1600'	Strk gravel & sand
1600'	- 1630'	XX Blue clay
1630'	- 1645'	Blue clay & sand
1645'	- 1660'	Brown clay & Blue clay
1660'	- 1675'	Shale, blue clay
1675'	- 1690'	Shale, blue clay
1690'	- 1705'	Brown clay, blue clay
1705'	- 1720'	Brown clay, sand streak
1720'	- 1735'	Blue clay
1735'	- 1750'	Blue clay
1750'	- 1809'	Blue shale

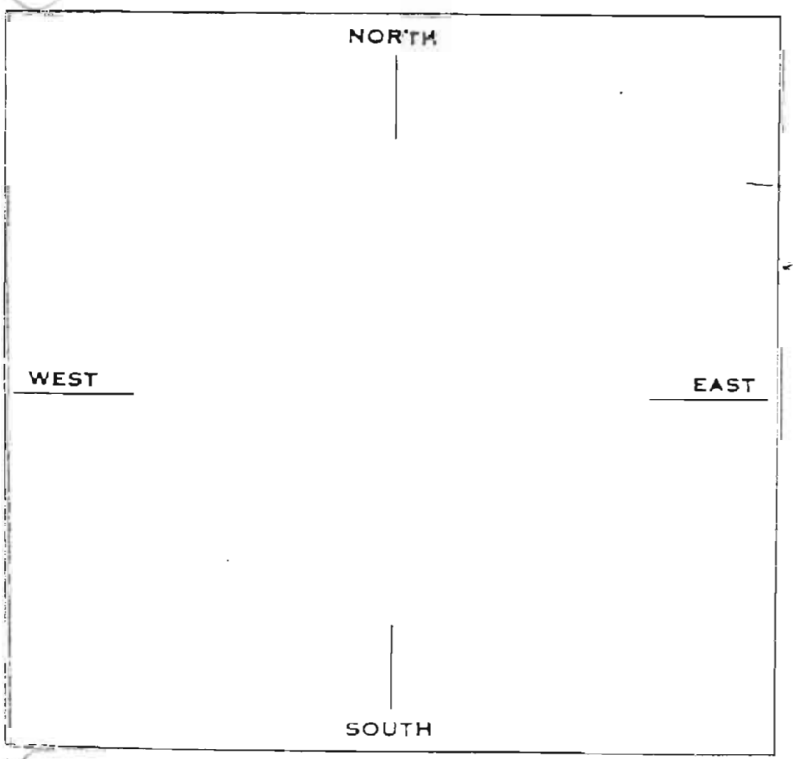

cation of well in areas not sectionized.
ketch roads, railroads, streams, or other features as necessary.
ndicate distances.

14S/02E-17K1

Appendix A2

TRIPLICATE
Owner's Copy

STATE OF CALIFORNIA
THE RESOURCES AGENCY
DEPARTMENT OF WATER RESOURCES

WATER WELL DRILLERS REPORT

Do not fill in

No. 286024

Notice of Intent No. 239439
Local Permit No. or Date 7-28-89 69712

[NEW WATER SUPPLY WELL LOCATED SOUTH OF SCALEHOUSE]

State Well No. 14S/02E-17K01
Other Well No. PRESSURE - 180 Ft.

(1) OWNER: Name Marina Landfill Mtry Regional Waste Mgmnt. Dist
Address P.O. Box 609
City Marina, CA 93933 ZIP

(2) LOCATION OF WELL (See instructions):
County Monterey Owner's Well Number
Well address if different from above Marina Disposal site
Township Range Section
Distance from cities, roads, railroads, fences, etc.

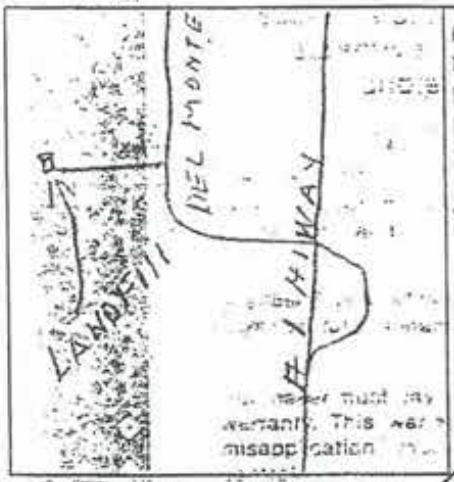

WELL LOCATION SKETCH

(3) TYPE OF WORK:
New Well ☒ Deepening ☐
Reconstruction ☐
Reconditioning ☐
Horizontal Well ☐
Destruction ☐ (Describe destruction materials and procedures in Item 12)

(4) PROPOSED USE:
Domestic ☒
Irrigation ☐
Industrial ☐
Test Well ☐
Municipal ☐
Other ☐
(Describe)

(5) EQUIPMENT:
Rotary ☒ Reverse ☐
Cable ☐ Air ☐
Other ☐ Bucket ☐

(6) GRAVEL PACK:
Yes ☒ No ☐ Size 6
Diameter of bore 14
Packed from 180 to 250 ft.
well pack pea gravel & sand

(7) CASING INSTALLED:
Steel ☐ Plastic ☒ Concrete ☐

(8) PERFORATIONS:
Type of perforation or size of screen

From ft.	To ft.	Dia. in.	Gage or Wall	From ft.	To ft.	Slot size
0	210	6	pvc SDR21F480	210	250	.030 pvc sand screen

(9) WELL SEAL:
Was surface sanitary seal provided? Yes ☒ No ☐ If yes, to depth 180 ft.
Were strata sealed against pollution? Yes ☒ No ☐ Interval solid ft.
Method of sealing neat cement

(10) WATER LEVELS:
Depth of first water, if known 131 ft.
Standing level after well completion ~~136~~ 131 ft.

(11) WELL TESTS:
Was well test made? Yes ☒ No ☐ If yes, by whom? Self
Type of test Pump ☒ Bailer ☐ Air lift ☐
Depth to water at start of test 131 ft. At end of test 136 ft.
Discharge gal/min after 33 hours Water temperature 67
Chemical analysis made? Yes ☒ No ☐ If yes, by whom? Nitrate Al Lab
Was electric log made Yes ☐ No ☐ If yes, attach copy to this report

(12) WELL LOG: Total depth 255 ft. Completed depth 250 ft.

from ft.	to ft.	Formation (Describe by color, character, size or material)
0	4	Top soil
4	35	Beach sand
35	56	Brown silt
56	91	Loose red sand
91	126	Green clay &* sand
126	152	Red sand water bearing
152	159	Green clay
159	194	Coarses sand
194	205	Sticky green clay
205	255	Coarse gravel

WELL DRILLER'S STATEMENT:
This well was drilled under my jurisdiction and this report is true to the best of my knowledge and belief.

Signed James I. Ash (Well Driller)
NAME FRED ASH & SONS, INC. (Person, firm, or corporation) (Typed or printed)
Address 16339 Castroville Blvd.
City Salinas, CA 93907 ZIP
License No. 391942 Date of this report 8-9-89

IF ADDITIONAL SPACE IS NEEDED, USE NEXT CONSECUTIVELY NUMBERED FORM

DWR 188 (REV. 12-86)

CONFIDENTIAL
NOT FOR PUBLIC USE
WATER CODE SEC. 13752

STA-RITE INDUSTRIES, INC.
DELAVAN, WISCONSIN 53115

P. O. BOX 178
1508 ABBOTT ST.

TELEPHONE
408 424-2937

5-17-74

Appendix A2

ROY V. ALSOP & SON

SINCE 1873

Well Drilling

FAIRBANKS-MORSE PUMPS AND PRESSURE SYSTEMS POMONA

INDUSTRIAL PUMPS

SALES AND SERVICE

SALINAS, CALIFORNIA 93901

Dia. 14" #10 ga.

LOG OF WELL
for
Monterey Peninsula Garbage & Refuse Disposal District

June 3, 1972

145/2E-17L1

0 ft.	to 108 ft.	Sand
108	" 132	Blue clay
132	" 144	Yellow sandy-sediment
144	" 148	Blue clay
148	" 162	Sandy yellow sediment
162	" 176	Fine packed sand
176	" 188	Yellow clay
188	" 200	Sand & fine gravel
200	" 206	Fine silty sand
206	" 214	Fine sand & float rock
214	" 226	Blue clay
226	" 236	Yellow clay
-146 > 236	" 240	Fine gravel
240 I	" 303	Sand & gravel
303	" 305	Yellow clay
305	" 320	Mucky sand
320 I	" 351	Sand & gravel
351	" 354	Soft sand stone

Perforations: 244 ft. to 303 ft.
328 " 338

Concrete Plug - 6 ft.

Static Water Level - 139½ ft.

= = = gallons per minute =
= ~~1100~~ =

Pumps 1090 gal per minute

Ground elev. approx 90 feet

14/2 - 18E1

Appendix A2

Do Not Fill In

ORIGINAL

File with DWR

STATE OF CALIFORNIA
THE RESOURCES AGENCY
DEPARTMENT OF WATER RESOURCES

CONFIDENTIAL LOG

Water Code Sec. 13WATER WELL DRILLERS REPORT 33

No 121665

State Well No. 14S/2E-18E1

Other Well No.

(1) OWNER: Armstrong Ranch
Name c/o M. L. Dubach, Inc.
Address PO Box P, Davis, Ca. 95616

(2) LOCATION OF WELL:
County Monterey Owner's number, if any
Township, Range, and Section: Between Marina & Castroville
Distance from cities, roads, railroads, etc.: 2½ Miles from Bridges on Hwy 1,
off Lapis Road

(3) TYPE OF WORK (check):
New Well ☑ Deepening ☐ Reconditioning ☐ Destroying ☐
If destruction, describe material and procedure in Item 11.

(4) PROPOSED USE (check):
Domestic ☐ Industrial ☐ Municipal ☐
Irrigation ☒ Test Well ☐ Other ☐

(5) EQUIPMENT:
Rotary ☑
Cable ☐
Other ☐

(6) CASING INSTALLED:
STEEL: OTHER:
SINGLE ☒ DOUBLE ☐

From ft.	To ft.	Diam.	Gage or Wall
	303	14"	1/4
303	306	14"x12" reducer	
306	870	12	1/4

Size of shoe or well ring:
Describe joint welded

If gravel packed

Diameter of Bore	From ft.	To ft.
26	300	870

Size of gravel: 1/4 pea

(7) PERFORATIONS OR SCREEN:
Type of perforation or name of screen

From ft.	To ft.	Perf. per row	Rows per ft.	Size in. x in.
666	834	8	4½	1/8" std louvre
490				

(8) CONSTRUCTION:
Was a surface sanitary seal provided? Yes ☑ No ☐ To what depth? 300 ft.
Were any strata sealed against pollution? Yes ☑ No ☐ If yes, note depth of strata
From 0 ft. to 300 ft.
From ft. to ft.
Method of sealing cement

(9) WATER LEVELS:
Depth at which water was first found, if known ft.
Standing level before perforating, if known ft.
Standing level after perforating and developing ft.

(10) WELL TESTS: To be tested
Was pump test made? Yes ☐ No ☐X If yes, by whom?
Yield: gal./min. with ft. drawdown after hrs.
Temperature of water Was a chemical analysis made? Yes ☐ No ☐
Was electric log made of well? Yes ☐ No ☐ If yes, attach copy

(11) WELL LOG:
Total depth ft. Depth of completed well 870 ft.
Formation: Describe by color, character, size of material, and structure

ft.	ft.	Formation
0	75	fine sand
75	100	coarse gravel
100	125	gravel-streaks clay
125	150	clay rock
150	175	coarse gravel
175	200	gravel-streak clay
200	225	fine sand streak clay
225	250	fine sand streak clay
250	275	gravel
275	300	fine sand streak clay
300	325	white sand
325	350	sand-clay streaks
350	375	sand
375	400	fine sand
400	425	sand gravel
425	450	sand gravel
450	475	sand streaks clay
475	500	coarse gravel-clay
500	525	sand clay
525	550	sand clay
550	575	sandy clay
575	600	fine sand clay
600	625	sand
625	650	Red clay gravel
650	675	yellow clay
675	700	yellow clay
700	725	fine gravel
725	750	coarse gravel
750	775	coarse gravel
775	800	fine gravel
800	825	coarse gravel
825	850	coarse gravel
850	875	yellow clay
875	890	yellow clay
890	913	yellow clay

Work started 7-2-74 19 Completed 7-9-74 19

WELL DRILLER'S STATEMENT:
This well was drilled under my jurisdiction and this report is true to the best of my knowledge and belief.
NAME Salinas Pump Co.,
(Person, firm, or corporation) (Typed or printed)
Address 1128 Madison Lane, Salinas, Ca. 93901
[SIGNED] (Well Driller)
License No. 273053 Dated 715-74, 19

SKETCH LOCATION OF WELL ON REVERSE SIDE

TRIPLICATE
Owner's Copy
Page 1 of 2

STATE OF CALIFORNIA
WELL COMPLETION REPORT
Refer to Instruction Pamphlet

No. 419777

DWR USE ONLY — DO NOT FILL IN
Appendix A2
STATE WELL NO./STATION NO.
LATITUDE LONGITUDE
APN/TRS/OTHER

Owner's Well No. 701471
Date Work Began 06/18/97, Ended 06/26/97
Local Permit Agency MONTEREY COUNTY DEPARTMENT OF HEALTH
Permit No. WSAL 97 067 Permit Date 04/07/97

GEOLOGIC LOG

ORIENTATION (✓) ___ VERTICAL ___ HORIZONTAL ___ ANGLE ___ (SPECIFY)
DEPTH TO FIRST WATER ___ (Ft.) BELOW SURFACE

DEPTH FROM SURFACE Ft.	to Ft.	DESCRIPTION *Describe material, grain size, color, etc.*
0	3	TOP SOIL
3	60	CLEAN HOLE
60	90	SAND
90	100	SANDY CLAY AND CLAY
100	120	BLUE CLAY AND SANDY CLAY
120	155	CLAY
155	160	SANDY CLAY AND SAND
160	180	SAND AND GRAVEL
180	200	SAND
200	220	CLAY
220	230	CLAY AND SAND
230	240	SAND AND GRAVEL
240	245	SAND
245	255	CLAY
255	260	SAND
260	280	SAND AND LITTLE CLAY
280	345	SAND AND GRAVEL
345	360	CLAY
360	380	CLAY AND SAND
380	400	BROWN AND BLUE CLAY
400	480	CLAY
480	520	CLAY AND SANDY CLAY
520	540	CLAY AND GRAVEL
540	560	CLAY AND SAND
560	562	SAND
562	600	SANDY CLAY
600	640	CLAY AND FINE SANDY CLAY
640	655	CLAY
655	660	SAND

TOTAL DEPTH OF BORING 840 (Feet)
TOTAL DEPTH OF COMPLETED WELL 825 (Feet)

WELL OWNER

Name HINTON
Mailing Address 5 HARRIS COURT
CITY MONTEREY, CA. 93940 STATE ZIP

WELL LOCATION

Address 14811 DEL MONTE AVE.
City MONTEREY
County MONTEREY
APN Book 175 Page 011 Parcel 041
or Township ___ Range ___ Section ___
or Latitude ___ DEG. MIN. SEC. NORTH Longitude ___ DEG. MIN. SEC. WES

LOCATION SKETCH

NORTH
SEE ATTACHED
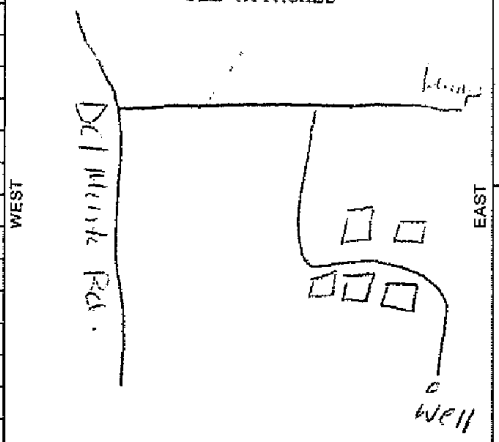

SOUTH
Illustrate or Describe Distance of Well from Landmarks such as Roads, Buildings, Fences, Rivers, etc. PLEASE BE ACCURATE & COMPLETE.

ACTIVITY (✓)

X NEW WELL
MODIFICATION/REPAIR
___ Deepen
___ Other (Specify)
___ DESTROY *(Describe Procedures and Materia Under "GEOLOGIC LOG*

PLANNED USE(S) (✓)

___ MONITORING
WATER SUPPLY
X Domestic
___ Public
___ Irrigation
___ Industrial
___ "TEST WELL"
___ CATHODIC PROTEC TION
___ OTHER (Specify)

DRILLING METHOD REVERSE ROTARY FLUID WATER

WATER LEVEL & YIELD OF COMPLETED WELL

DEPTH OF STATIC WATER LEVEL 162.25 (Ft.) & DATE MEASURED 08/18/97
ESTIMATED YIELD* 250 (GPM) & TEST TYPE PUMP
TEST LENGTH ___ (Hrs.) TOTAL DRAWDOWN 19.35 (Ft.)
** May not be representative of a well's long-term yield.*

CASING(S)

DEPTH FROM SURFACE Ft.	to Ft.	BORE-HOLE DIA. (Inches)	TYPE (✓) BLANK	SCREEN	CONDUCTOR	FILL PIPE	MATERIAL/ GRADE	INTERNAL DIAMETER (Inches)	GAUGE OR WALL THICKNESS	SLOT SIZE IF ANY (Inches)
0	50	32			X		STEEL	.250	STAINLESS .040	
0	670	22	X				STEEL	.250	STAINLESS	
670	730	22		X			STEEL	.250	STAINLESS .040	
730	785	22	X				STEEL	.250	STAINLESS	
785	805	22		X			STEEL	.250	STAINLESS .040	
805	825	22	X				STEEL	.250	STAINLESS	

ANNULAR MATERIAL

DEPTH FROM SURFACE Ft.	to Ft.	TYPE CEMENT (✓)	BENTONITE (✓)	FILL (✓)	FILTER PACK (TYPE/SIZE)
0	650	XX			
650	840			XX	8X16

ATTACHMENTS (✓)

___ Geologic Log
___ Well Construction Diagram
___ Geophysical Log(s)
___ Soil/Water Chemical Analyses
___ Other ___

ATTACH ADDITIONAL INFORMATION, IF IT EXISTS.

CERTIFICATION STATEMENT

I, the undersigned, certify that this report is complete and accurate to the best of my knowledge and belief.

NAME MAGGIORA BROS. DRILLING, INC.
(PERSON, FIRM, OR CORPORATION) (TYPED OR PRINTED)
ADDRESS 595 AIRPORT BLVD. CITY WATSONVILLE, CA STATE 95076
Signed ___ (WELL DRILLER/AUTHORIZED REPRESENTATIVE) DATE SIGNED 11/14/97 C-57 LICENSE NUMBER 243557

TRIPLICATE
Owner's Copy
Page 2 of 2

STATE OF CALIFORNIA
WELL COMPLETION REPORT
Refer to Instruction Pamphlet

No. 419779

DWR USE ONLY — DO NOT FILL IN
STATE WELL NO./STATION NO.
LATITUDE LONGITUDE
APN/TRS/OTHER

Appendix A2

Owner's Well No. 201471
Date Work Began 06/18/97, Ended 06/26/97
Local Permit Agency MONTEREY COUNTY DEPARTMENT OF HEALTH
Permit No. WSAL 97-067 Permit Date 04/07/97

GEOLOGIC LOG

ORIENTATION (✓) ___ VERTICAL ___ HORIZONTAL ___ ANGLE ___ (SPECIFY)
DEPTH TO FIRST WATER ___ (Ft.) BELOW SURFACE

DEPTH FROM SURFACE Ft.	to Ft.	DESCRIPTION *Describe material, grain size, color, etc.*
660	680	COARSE SAND AND GRAVEL
680	700	COARSE SAND
700	715	HARD SAND
715	720	SAND AND GRAVEL
720	730	SAND AND GRAVEL
730	740	CLAY
740	780	HARD CLAY
780	785	CLAY
785	790	SAND AND GRAVEL
790	800	HARD SAND
800	840	CLAY

TOTAL DEPTH OF BORING 840 (Feet)
TOTAL DEPTH OF COMPLETED WELL 825 (Feet)

WELL OWNER

Name MBWPCD
Mailing Address 5 HARRIS COURT
CITY MONTEREY, CA. 93940 STATE ZIP

WELL LOCATION

Address 14811 DEL MONTE AVE.
City MONTEREY
County MONTEREY
APN Book 175 Page 011 Parcel 041
or Township ___ Range ___ Section ___
or Latitude ___ DEG. ___ MIN. ___ SEC. NORTH Longitude ___ DEG. ___ MIN. ___ SEC. WEST

LOCATION SKETCH

NORTH
SEE ATTACHED
WEST EAST
SOUTH
Illustrate or Describe Distance of Well from Landmarks such as Roads, Buildings, Fences, Rivers, etc. PLEASE BE ACCURATE & COMPLETE.

ACTIVITY (✓)

X NEW WELL
MODIFICATION/REPAIR
___ Deepen
___ Other (Specify)
___ DESTROY *(Describe Procedures and Materials Under "GEOLOGIC LOG")*

PLANNED USE(S) (✓)

___ MONITORING
WATER SUPPLY
___ Domestic
X Public
___ Irrigation
___ Industrial
___ "TEST WELL"
___ CATHODIC PROTECTION
___ OTHER (Specify)

DRILLING METHOD REVERSE ROTARY FLUID WATER

WATER LEVEL & YIELD OF COMPLETED WELL

DEPTH OF STATIC WATER LEVEL 162.25 (Ft.) & DATE MEASURED 08/18/97
ESTIMATED YIELD* 250 (GPM) & TEST TYPE PUMP
TEST LENGTH 5.5 (Hrs.) TOTAL DRAWDOWN 19.33 (Ft.)
* *May not be representative of a well's long-term yield.*

CASING(S)

DEPTH FROM SURFACE Ft.	to Ft.	BORE-HOLE DIA. (Inches)	TYPE (✓) BLANK	SCREEN	CONDUCTOR	FILL PIPE	MATERIAL/ GRADE	INTERNAL DIAMETER (Inches)	GAUGE OR WALL THICKNESS	SLOT SIZE IF ANY (Inches)
0	50	32			X		STEEL	.250	STAINLESS .040	
0	670	22	X				STEEL	.250	STAINLESS	
670	730	22		X			STEEL	.250	STAINLESS .040	
730	785	22	X				STEEL	.250	STAINLESS	
785	805	22		X			STEEL	.250	STAINLESS .040	
805	825	22	X				STEEL	.250	STAINLESS	

ANNULAR MATERIAL

DEPTH FROM SURFACE Ft.	to Ft.	TYPE CEMENT (✓)	BENTONITE (✓)	FILL (✓)	FILTER PACK (TYPE/SIZE)
0	650	XX			
650	840			XX	8X16

ATTACHMENTS (✓)

___ Geologic Log
___ Well Construction Diagram
___ Geophysical Log(s)
___ Soil/Water Chemical Analyses
___ Other ___

ATTACH ADDITIONAL INFORMATION, IF IT EXISTS.

CERTIFICATION STATEMENT

I, the undersigned, certify that this report is complete and accurate to the best of my knowledge and belief.

NAME MAGGIORA BROS. DRILLING, INC.
(PERSON, FIRM, OR CORPORATION) (TYPED OR PRINTED)
ADDRESS 595 AIRPORT BLVD. CITY WATSONVILLE, CA STATE 95076 ZIP
Signed [signature] 11/14/97
WELL DRILLER/AUTHORIZED REPRESENTATIVE DATE SIGNED
249957
C-57 LICENSE NUMBER

Appendix A. Summary of Lithology Recorded on Cross-Section Well Logs
Hydrogeologic Investigation of the Salinas Valley Basin in the Vicinity of Fort Ord and Marina
Monterey County Water Resources Agency

Cross-Section B-B' Well Names	Top (feet bgs)	Bottom (feet bgs)	Boring log record	GEOBASE Code
14S/2E-21N01	438	498	sand and gravel (pea to 1") clay at top-streaks	snd/grvl/cly
14S/2E-21N01	498	510	yellow brown clay	yellow clay
14S/2E-21N01	510	534	sand and gravel (1-3" rocks)	gravel/sand
14S/2E-21N01	534	564	sand	sand
14S/2E-21N01	564	580	sand and gravel (1-4" rocks)	gravel/sand
14S/2E-21N01	580	596	red sand	red sand
14S/2E-21N01	596	600	red sandstone	red sand
14S/2E-21E01	0	128	yellow dry sand	yellow sand
14S/2E-21E01	128	130	yellow clay w/streaks of red	yellow clay
14S/2E-21E01	130	144	blue clay - hard	blue clay
14S/2E-21E01	144	156	hard yellow clay	yellow clay
14S/2E-21E01	156	180	fine yellow clay	yellow sand
14S/2E-21E01	180	188	blue clay	blue clay
14S/2E-21E01	188	196	blue sand	blue sand
14S/2E-21E01	196	218	coarse sand w/some gravel	gravel/sand
14S/2E-21E01	218	242	brown sand - fine/some gravel	gravel/sand
14S/2E-21E01	242	272	hard yellow clay w/some sand	sandy clay
14S/2E-21E01	272	280	sand w/some rock	gravel/sand
14S/2E-21E01	280	396	sand/gravel rock (3-6")	gravel/sand
14S/2E-21E01	396	408	yellow clay	yellow clay
14S/2E-21E01	408	428	sand and some gravel	gravel/sand
14S/2E-21E01	428	442	sand and heavy gravel/rock (1-3")	gravel/sand
14S/2E-21E01	442	450	sand and heavy gravel/clay streaks	snd/grvl/cly
14S/2E-21E01	450	456	sand and gravel (1-3")	gravel/sand
14S/2E-21E01	456	460	yellow clay	yellow clay
14S/2E-21E01	460	466	sand	sand
14S/2E-21E01	466	470	yellow clay	yellow clay
14S/2E-21E01	470	484	fine sand and some gravel	gravel/sand
14S/2E-21E01	484	492	coarse sand and heavy gravel	gravel/sand
14S/2E-21E01	492	508	coarse sand and some gravel	gravel/sand
14S/2E-21E01	508	514	hard yellow clay	yellow clay
14S/2E-21E01	514	518	white sandstone w/yellow clay	sandy clay
14S/2E-21E01	518	532	fine sand	fine sand
14S/2E-21E01	532	542	coarse sand and gravel/rocks (1-4")	gravel/sand
14S/2E-21E01	542	550	sandy clay	sandy clay
14S/2E-21E01	550	562	sand and gravel w/clay streaks	gravel/sand
14S/2E-21E01	562	576	sand and heavy gravel	gravel/sand
14S/2E-21E01	576	592	fine sand	fine sand
14S/2E-21E01	592	612	sand and gravel (1-5" rock)	gravel/sand
14S/2E-21E01	612	614	red sandstone	red sand
14S/2E-21F02	0	8	top soil	topsoil
14S/2E-21F02	8	65	sediment	sediment
14S/2E-21F02	65	90	blue sandy clay	blue clay
14S/2E-21F02	90	116	yellow clay	yellow clay
14S/2E-21F02	116	130	mucky sand	sand
14S/2E-21F02	130	134	sandy yellow clay	yellow clay
14S/2E-21F02	134	140	river gravel	gravel
14S/2E-21F02	140	166	yellow clay	yellow clay
14S/2E-21F02	166	186	sand and gravel	gravel/sand
14S/2E-21F02	186	194	sand and fine gravel	gravel/sand
14S/2E-21F02	194	263	heavy gravel	gravel

Appendix A. Summary of Lithology Recorded on Cross-Section Well Logs
Hydrogeologic Investigation of the Salinas Valley Basin in the Vicinity of Fort Ord and Marina
Monterey County Water Resources Agency

Cross-Section B-B' Well Names	Top (feet bgs)	Bottom (feet bgs)	Boring log record	GEOBASE Code
14S/2E-21F02	263	277	red sand	red sand
14S/2E-21F02	277	280	yellow clay	yellow clay
14S/2E-21F02	280	297	gravel and yellow clay	gravelly clay
14S/2E-21F02	297	300	yellow clay	yellow clay
14S/2E-16G01	0	100	clay	clay
14S/2E-16G01	100	170	coarse sand	coarse sand
14S/2E-16G01	170	220	gravel	gravel
14S/2E-16G01	220	230	gravel/brown clay	gravelly clay
14S/2E-16G01	230	240	gravel/clay	gravelly clay
14S/2E-16G01	240	260	coarse sand/clay	sandy clay
14S/2E-16G01	260	360	clay/sand	sandy clay
14S/2E-16G01	360	370	sand/clay	sandy clay
14S/2E-16G01	370	420	coarse sand	coarse sand
14S/2E-16G01	420	440	clay/sand	sandy clay
14S/2E-16G01	440	470	coarse sand	coarse sand
14S/2E-16G01	470	490	sand/clay	sandy clay
14S/2E-16G01	490	520	sand/clay	sandy clay
14S/2E-16G01	520	540	clay	clay
14S/2E-16G01	540	570	sand	sand
14S/2E-16G01	570	610	coarse sand	coarse sand
14S/2E-16G01	610	630	sand/clay	sandy clay
14S/2E-09D04	0	150	brown clay	brown clay
14S/2E-09D04	150	180	coarse sand	coarse sand
14S/2E-09D04	180	220	coarse sand/gravel	gravel/sand
14S/2E-09D04	220	230	clay/gravel	gravelly clay
14S/2E-09D04	230	260	silt stone/clay	clay
14S/2E-09D04	260	270	clay	clay
14S/2E-09D04	270	280	coarse sand/clay	sandy clay
14S/2E-09D04	280	330	clay	clay
14S/2E-09D04	330	420	sand/clay	sandy clay
14S/2E-09D04	420	430	coarse sand/clay	sandy clay
14S/2E-09D04	430	440	coarse sand	coarse sand
14S/2E-09D04	440	460	coarse sand/clay	sandy clay
14S/2E-09D04	460	490	coars sand	coarse sand
14S/2E-09D04	490	500	coarse sand/clay	sandy clay
14S/2E-09D04	500	540	sand/clay	sandy clay
14S/2E-09D04	540	550	hard clay	clay
14S/2E-09D04	550	570	hard clay/sand	sandy clay
14S/2E-09D04	570	580	coarse sand	coarse sand
14S/2E-09D04	580	610	coarse sand/clay	sandy clay
14S/2E-09D04	610	630	clay/sand	sandy clay

Notes:

* a partial boring log description is provided for this well

ORIGINAL
File Original, Duplicate and Triplicate with the
REGIONAL WATER POLLUTION
CONTROL BOARD No. 3
(Insert appropriate number)

WATER WELL DRILLERS REPORT

(Sections 7076, 7077, 7078, Water Code)

STATE OF CALIFORNIA

32
12S/2E

Do Not Fill In
No 751

Appendix A2

State Well No.
Other Well No. 14/2 - 21F
1C-74

(1) OWNER:

Name Mrs. A. Warcken
Address Pomber Street
Castroville, California

(2) LOCATION OF WELL:

County Monterey Owner's number, if any—
R. F. D. or Street No.

On Breschini Ranch 2½ Mi. E. SE of
Twin Bridges & State Highway 1.
50 ft. NE of old well # 46 on Map

(3) TYPE OF WORK (check):

New well ☒ Deepening ☐ Reconditioning ☐ Abandon ☐
If abandonment, describe material and procedure in Item 11.

(4) PROPOSED USE (check):

Domestic ☐ Industrial ☐ Municipal ☐
Irrigation ☒ Test Well ☐ Other ☐

(5) EQUIPMENT:

Rotary ☐
Cable ☒
Dug Well ☐

(6) CASING INSTALLED:

SINGLE ☐ DOUBLE ☒

From ft.	to ft.	Diam.	Gage or Wall
0	300	12"	12

Type and size of shoe or well ring
Describe joint

If gravel packed

Diameter of Bore	from ft.	to ft.

Size of gravel:

(7) PERFORATIONS:

Type of perforator used Mills
Size of perforations 3½ in., length, by ¼ in.

From ft.	to ft.	Perf. per row	Rows per ft.
200	261	6	1

(8) CONSTRUCTION:

Was a surface sanitary seal provided? ☐ Yes ☐ No To what depth ft.
Were any strata sealed against pollution? ☐ Yes ☐ No If yes, note depth of strata

From ft.	to ft.

Method of Sealing

(9) WATER LEVELS:

Depth at which water was first found ft.
Standing level before perforating ft.
Flow level after perforating ft.

(10) WELL TESTS:

Was a pump test made? ☐ Yes ☐ No If yes, by whom?
Yield: gal./min. with ft. draw down after hrs.
Temperature of water Was a chemical analysis made? ☐ Yes ☐ No
Was electric log made of well? ☐ Yes ☐ No

(11) WELL LOG:

Total depth 300 ft. Depth of completed well 300 ft.
Formation: Describe by color, character, size of material, and structure.

0 ft. to	2 ft.	Top soil
2 "	65 "	Sediment
65 "	90 "	Blue sandy clay
90 "	116 "	Yellow clay
116 "	130 "	Mucky sand
130 "	134 "	Sandy yellow clay
134 "	140 "	River gravel
140 "	166 "	Yellow clay
166 "	186 "	Sand & gravel
186 "	194 "	Sand & fine gravel
194 "	263 "	Heavy gravel
264 "	277 "	Red sand
277 "	280 "	Yellow clay
280 "	297 "	Gravel & yellow clay
297 "	300 "	Yellow clay

Work started 19 . Completed 19

WELL DRILLER'S STATEMENT:

This well was drilled under my jurisdiction and this report is true to the best of my knowledge and belief.

NAME Roy V. Alsop & Son
(Person, firm, or corporation) (Typed or printed)
Address 1508 Abbott Street
Salinas, California

[SIGNED] [illegible]
Well Driller

License No. 132870 Dated: October 22, 1956

Water Code Section 7

DWR FORM NO. 246 (REV. 3-54)

STAAL, GARDNER & DUNNE, INC.
Consulting Engineers and Geologists
5855 Olivas Park Drive • Ventura, California 93003-7672

SGD

DRILLING LOG

CLIENT: Monterey Peninsula Water Management District			M91157
WELL: Monterey Sand (TH-1)	No.:	GEOLOGIST: M.S. Burke, M.B. Feeney	
COUNTY: Monterey	STATE: CA	LOGGING PERSONNEL: M.S. Burke	
TOWNSHIP:	RANGE: SECTION:	SERVICES PERFORMED: Project management, lithologic logging, hydrogeologic analysis, contractor supervision.	
LOCATION: Abandoned Monterey Sand Plant, Marina, CA		DATE BEGUN: 12/10/91	DATE RELEASED: 12/10/91
ELEVATION: 10 (DERIVED)	TOTAL DEPTH: 260'	INTERVAL LOGGED: 0-260'	FOOTAGE:
SPUD DATE: 12/10/91	FINAL DATE: 12/10/91	REMARKS: Drilling fluid - Supermud. E-, & Gamma logs performed; Test hole abandoned by pumping neat cement from bottom of hole.	
DRILLING COMPANY: R.L. Redfearn, Bakersfield, CA			
PUSHER: Rick Redfearn, Asst'd By John O'Tool			

HOLE SIZE	
0 - 260	4-3/4"

CASING RECORD		

ABBREVIATIONS			
CO	CIRCULATE OUT	PR	POOR RETURNS
LAT	LOGGED AFTER TRIP	SC	SAND CONTENT (%)
NB	NEW BIT	VIS	VISCOSITY (SECONDS)
NCB	NEW CORE BIT	WL	WATER LOSS (CC/30 MIN)
NR	NO RETURN	WT	FLUID WEIGHT (LBS/CU FT)

CLAY SILT SAND GRAVEL

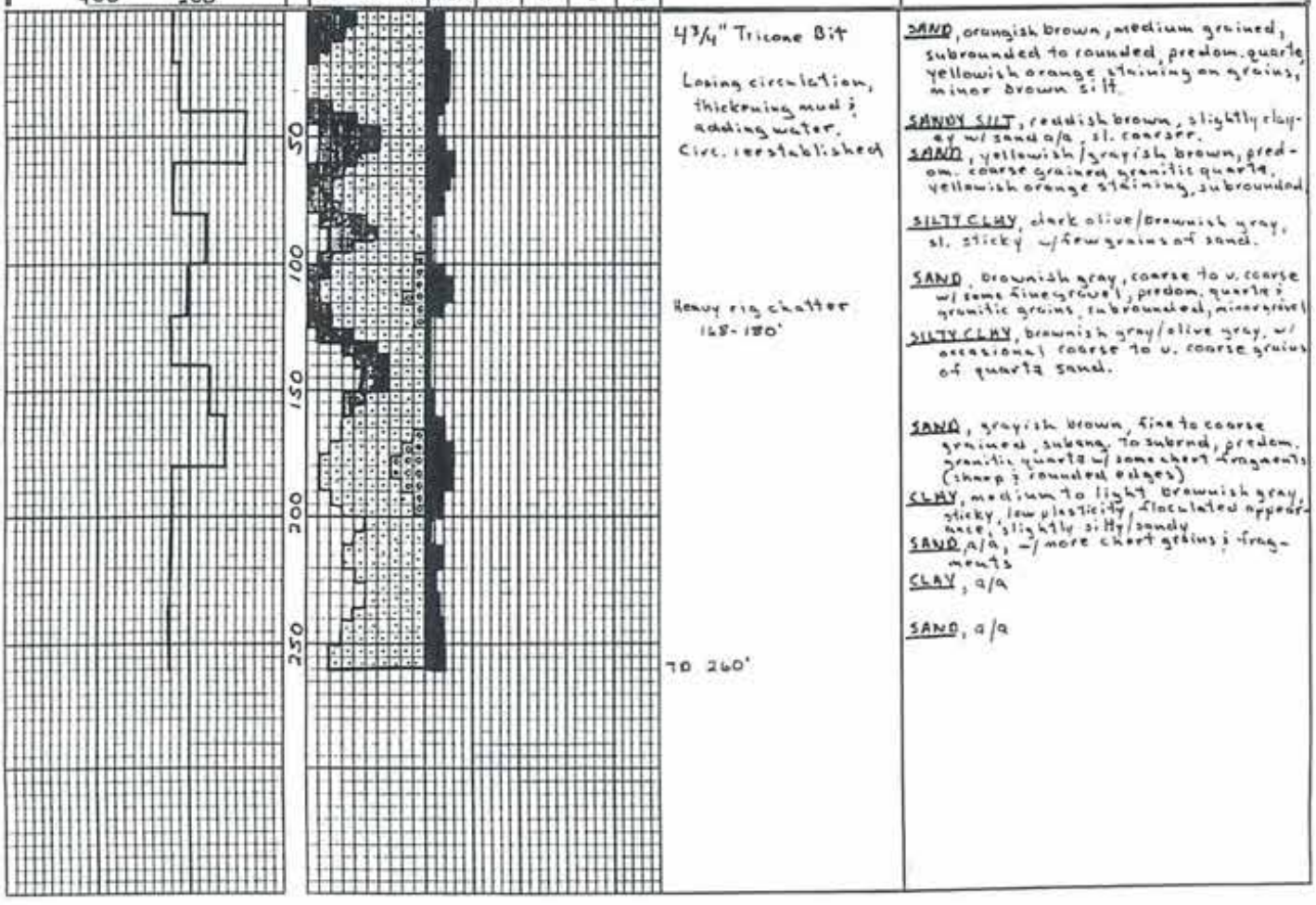

RIG ACTIVITY
MUD ADDITIONS AND PROPERTIES

47/8" Tricone Bit

Losing circulation, thickening mud; adding water.

Circ. reestablished

Heavy rig chatter 128-130'

TD 260'

DESCRIPTION AND REMARKS

SAND, grayish brown, medium grained, subrounded to rounded, predom. quartz, yellowish orange staining on grains, minor brown silt.

SANDY SILT, reddish brown, slightly clayey w/ sand a/a, sl. coarser.

SAND, yellowish/grayish brown, predom. coarse grained granitic quartz, yellowish orange staining, subrounded

SILTY CLAY, dark olive/brownish gray, sl. sticky w/ few grains of sand.

SAND, brownish gray, coarse to v. coarse w/ some fine gravel, predom. quartz & granitic grains, subrounded, minor gravel

SILTY CLAY, brownish gray/olive gray, w/ occasional coarse to v. coarse grains of quartz sand.

SAND, grayish brown, fine to coarse grained, subang. to subrnd, predom. granitic quartz w/ some chert fragments (sharp & rounded edges)

CLAY, medium to light brownish gray, sticky, low plasticity, flocculated appearance, slightly silty/sandy

SAND, a/a, -/more chert grains & fragments

CLAY, a/a

SAND, a/a

TH-2

STAAL, GARDNER & DUNNE, INC.
Consulting Engineers and Geologists
5855 Olivas Park Drive • Ventura, California 93003-7672

DRILLING LOG

CLIENT: Monterey Peninsula Water Management District			M91157
WELL: Regional Park (TH-2)	No.:	GEOLOGIST: M. S. Burke, M. B. Feeney	
COUNTY: Monterey	STATE: CA	LOGGING PERSONNEL: M. S. Burke	
TOWNSHIP:	RANGE: SECTION:	SERVICES PERFORMED: Project management, lithologic logging, hydrogeologic consultation, contractor observation.	
LOCATION: Regional Park District, Marina, CA. Edge of bluff at end of road starting at end of Dune Dr.		DATE BEGUN: 12/18/91	DATE RELEASED: 12/18/91
ELEVATION: 19 ft (DERGE)	TOTAL DEPTH: 277'	INTERVAL LOGGED: 0 - 277'	FOOTAGE: 277'
SPUD DATE: 12/18/91	FINAL DATE: 12/18/91	REMARKS: Drilling fluid - Revert. E- & Gamma logs performed, test hole abandoned w/ neat cement.	
DRILLING COMPANY: Pitcher Drilling, Palo Alto, CA.			
PUSHER: Wayne Baker, Garry Fossiona (asst)			

HOLE SIZE	
0 - 277'	5 1/4"

CASING RECORD		

ABBREVIATIONS			
CO	CIRCULATE OUT	PR	POOR RETURNS
LAT	LOGGED AFTER TRIP	SC	SAND CONTENT (%)
NB	NEW BIT	VIS	VISCOSITY (SECONDS)
NCB	NEW CORE BIT	WL	WATER LOSS (CC/30 MIN)
NR	NO RETURN	WT	FLUID WEIGHT (LBS/CU.FT.)

CLAY SILT SAND GRAVEL

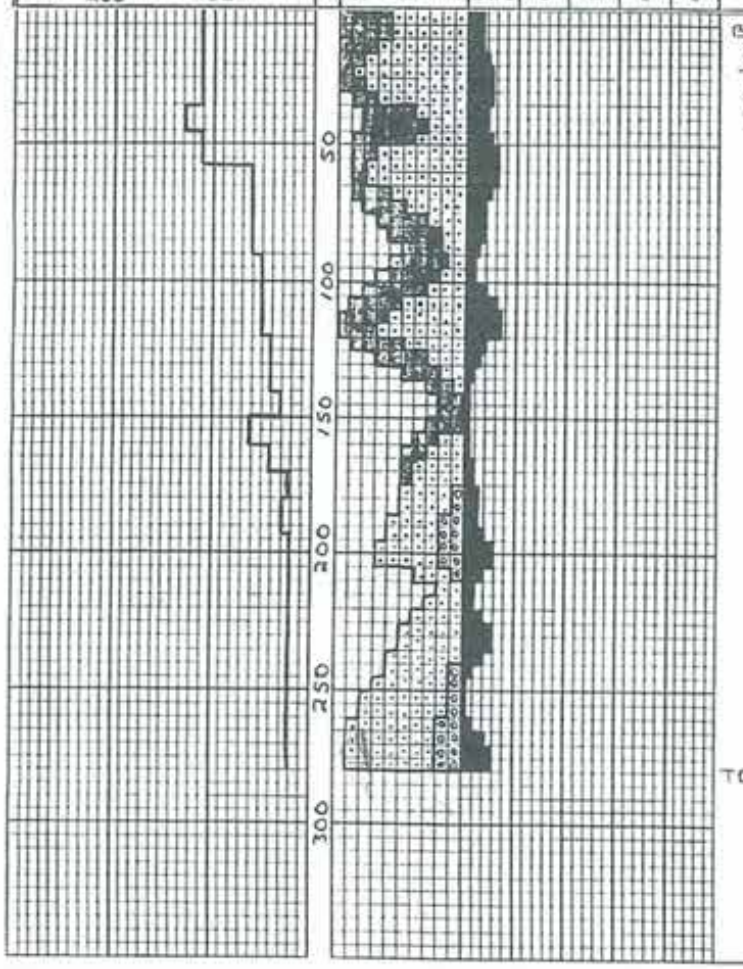

RIG ACTIVITY MUD ADDITIONS AND PROPERTIES

Begin @ 750
5¼" rock bit, revert
Thick mud @ first, cuttings wouldn't drop for first 35'.

TD 277, 1345

DESCRIPTION AND REMARKS

SAND, pale brown to brown, fine to med. grained, predom. subangular quartz, silty.

SANDY SILTY, brown to dark brown, w/ sand a/a

SAND, grayish brown, f. to c. grained, sub rounded to subang., predom quartz grains w/ short mafic flecks, some yellowish orange staining, silty, sl. clay.

CLAYEY SILT, lt. brownish gray w/ some fine grained sand

Dark brownish gray.

SANDY SILT, dk brownish gray silt a/a, w/ f. to med. grained, subrounded quartz sand.

SAND, dk yellowish brown, f. to c. grained w/ abdt coarse, subrnd granitic quartz w/ yellowish brown silt.

SANDY SILT, pale brown to brown, sl. clayey w/ fine quartz sand.

CLAY, grayish brown, sl. to med. sticky high plasticity, little silt, no sand, tight

SANDY CLAY, clay a/a w/ some silt, sticky, low plasticity, more coarse grained sand. (subang quartz w/ some orange staining) (common chert gravel fragments (rounded & sharp edges). Few coarse grains & fine gravel (chert & granite)

Coarse to very coarse.

SANDY CLAY, grayish brown, sticky, w/ sand a/a, @ brownish gray @ 220' w/ spongy consistency

SAND a/a w/ brown clay.

CLAY, bluish gray, tight, sticky, high plastic. Color change to brownish gray @ 260.

SAND, brownish gray to yellowish brown predom quartz (2/3) w/ chert (1/3) some gravel, minor clay.

STAAL, GARDNER & DUNNE, INC.

Consulting Engineers and Geologists
5855 Olivas Park Drive • Ventura, California 93003-7672

SGD

DRILLING LOG

CLIENT: Monterey Peninsula Water Management District		M91157
WELL: Granite Rock Co. (TH-3)	No.:	GEOLOGIST: M. S. Burke, M. B. Feeney
COUNTY: Monterey	STATE: CA	LOGGING PERSONNEL: M. S. Burke
TOWNSHIP:	RANGE: SECTION:	SERVICES PERFORMED: Project management, lithologic logging, hydrogeologic consultation, contractor supervision.
LOCATION: On the beach at the Granite Rock Co. property in Marina, CA		DATE BEGUN: 12/19/91 DATE RELEASED: 12/19/91
ELEVATION: 7ft (per GE)	TOTAL DEPTH: 250'	INTERVAL LOGGED: 0-250' FOOTAGE: 250'
SPUD DATE: 12/19/91	FINAL DATE: 12/19/91	REMARKS: Drilling fluid - Revert, E & Gamma logs performed, test hole abandoned w/ neat cement.
DRILLING COMPANY: Pitcher Drilling, Palo Alto, CA.		
PUSHER: Wayne Baker, asst'd by Garry Foppiano		

HOLE SIZE	
0-250'	5 1/4"

CASING RECORD		

ABBREVIATIONS			
CO	CIRCULATE OUT	PR	POOR RETURNS
LAT	LOGGED AFTER TRIP	SC	SAND CONTENT (%)
NB	NEW BIT	VIS	VISCOSITY (SECONDS)
NCB	NEW CORE BIT	WL	WATER LOSS (CC/30 MIN)
NR	NO RETURN	WT	FLUID WEIGHT (LBS/CU.FT.)

CLAY SILT SAND GRAVEL

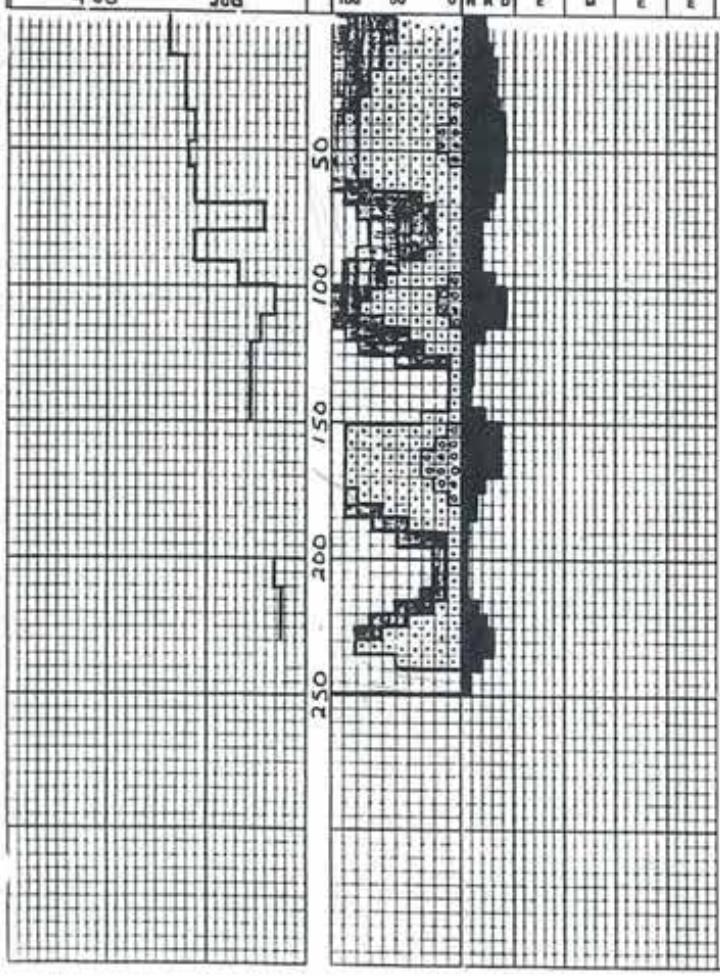

RIG ACTIVITY MUD ADDITIONS AND PROPERTIES	DESCRIPTION AND REMARKS
Begin drilling @ 8.55 w/ drag bit.	SAND, brown, fine to coarse gr., predom. med grained, subrounded, predom. quartz w/ many brown/olive gray grains, silty.
	SAND, brownish gray, a/a, though coarser grained granitic source for quartz, less silt, some fine gravel.
Wiper run, 11.30-12.00, "mud rings" forming in bore hole.	CLAYEY SILT, olive gray to dark olive gray, micaceous, sl. sandy
	SAND, fine to coarse grained, though predom. med brown, predom. granitic quartz, subang. to subround, silty, w/ minor/~~possible~~ chert grains & few, f. chert gravel (rounded)
	CLAY, bluish gray to olive gray, moderately tight, sticky, silty.
	Very tight, less silt.
Change to rock bit.	SAND, pale brown, fine to coarse grained, subangular to subrounded, predom. quartz w/ about grains of chert, common chert gravel frags w/ sharp & rounded edges.
	CLAY, olive to olive gray, sticky, low plastic, silty, sl. sandy.
	Tighter, less silt & sand.
	SAND, a/a
TD 250', 14.50	CLAY, olive brown to grayish brown, sticky, tight, very little sand or silt

APPENDIX B

Photographs of Cores and Chip Trays

(See attached DVD)

GEOSCIENCE

APPENDIX C

Soil Physical Properties Data Reports

GEOSCIENCE

APPENDIX C:

SOIL PHYSICAL PROPERTIES DATA REPORTS

CONTENTS

Description **Page**

Cover Letter (October 14, 2013) *C-1*

Cover Letter (March 5, 2014) *C-2*

Soil Physical Properties Data Reports *C-3*

Chain of Custody Records *C-10*

PTS Laboratories, Inc.

8100 Secura Way • Santa Fe Springs, CA 90670
Telephone (562) 347-2500 • Fax (562) 907-3610

October 14, 2013

Brian Villalobos
Geoscience Support Services
P.O. Box 220
Claremont, CA 91711

Re: PTS File No: 43626
Physical Properties Data
MPWSP; 13017-13

Dear Mr. Villalobos:

Please find enclosed report for Physical Properties analyses conducted upon samples received from your MPWSP; 13017-13 project. All analyses were performed by applicable ASTM, EPA, or API methodologies. An electronic version of the report has previously been sent to your attention via the internet. The samples are currently in storage and will be retained for thirty days past completion of testing at no charge. Please note that the samples will be disposed of at that time. You may contact me regarding storage, disposal, or return of the samples.

PTS Laboratories appreciates the opportunity to be of service. If you have any questions or require additional information, please contact Rachel Spitz at (562) 347-2504.

Sincerely,
PTS Laboratories, Inc.

Michael Mark Brady, P.G.
District Manager

Encl.

PTS Laboratories, Inc.

8100 Secura Way • Santa Fe Springs, CA 90670
Telephone (562) 347-2500 • Fax (562) 907-3610

March 5, 2014

Brian Villalobos
Geoscience Support Services
P.O. Box 220
Claremont, CA 91711

Re: PTS File No: 44073
Physical Properties Data
MPWSP; 13017-13

Dear Mr. Villalobos:

Please find enclosed report for Physical Properties analyses conducted upon samples received from your MPWSP; 13017-13 project. All analyses were performed by applicable ASTM, EPA, or API methodologies. An electronic version of the report has previously been sent to your attention via the internet. The samples are currently in storage and will be retained for thirty days past completion of testing at no charge. Please note that the samples will be disposed of at that time. You may contact me regarding storage, disposal, or return of the samples.

PTS Laboratories Inc. appreciates the opportunity to be of service. If you have any questions or require additional information, please contact Morgan Richards at (562) 347-2509.

Sincerely,
PTS Laboratories, Inc.

Michael Mark Brady, P.G.
District Manager

Encl.

PTS Laboratories, Inc.

8100 Secura Way • Santa Fe Springs, CA 90670
Telephone (562) 347-2500 • Fax (562) 907-3610

March 13, 2014

Brian Villalobos
Geoscience Support Services
P.O. Box 220
Claremont, CA 91711

Re: PTS File No: 44073
Revised Physical Properties Data Rev.01
MPWSP; 13017-13

Dear Mr. Villalobos:

Please find enclosed revised report for Physical Properties analyses conducted upon samples received from your MPWSP; 13017-13 project. The report has been revised to correct a unit calculation error for horizontal Hydraulic Conductivity for sample ML-4 146.5-147 at 146.95. All analyses were performed by applicable ASTM, EPA, or API methodologies. An electronic version of the report has previously been sent to your attention via the internet. The samples are currently in storage and will be retained for thirty days past completion of testing at no charge. Please note that the samples will be disposed of at that time. You may contact me regarding storage, disposal, or return of the samples.

PTS Laboratories Inc. appreciates the opportunity to be of service. If you have any questions or require additional information, please contact Morgan Richards at (562) 347-2509.

Sincerely,
PTS Laboratories, Inc.

Michael Mark Brady, P.G.
District Manager

Encl.

Project Name: MPWSP
Project Number: 13017-13

PTS File No: 44073
Client: Geoscience Support Services

TEST PROGRAM - 20140206

CORE ID	Depth ft.	Core Recovery ft.	Hydraulic Conductivity Pkg.	Hydraulic Conductivity API RP40/EPA 9100		Notes
		Plugs:	Vert. 1"	Horz. 1"		
Date Received: 20140204						
CX-B1 66.5-67	66.5-67	0.50	X	X		
CX-B1 166.5-167.0	166.5-167.0	0.50	X	X		
CX-B1 257.5-258	257.5-258	0.50	X			
CX-B2 207.5-208	207.5-208	0.50	X	X		
CX-B2 259-259.5	259-259.5	0.50	X			
CX-B3 107.5-108	107.5-108	0.50	X	X		
CX-B3 129-129.5	129-129.5	0.50	X			
CX-B3 177.5-178	177.5-178	0.50				
CX-B3 197.5-198	197.5-198	0.50	X	X		
ML-1 76-76.5	76-76.5	0.50	X			
ML-1 107.5-108	107.5-108	0.50	X	X		
ML-1 147-147.5	147-147.5	0.50	X			
ML-2 87-87.5	87-87.5	0.50	X			
ML-2 117.5-118	117.5-118	0.50	X	X		
ML-2 157.5-158	157.5-158	0.50	X	X		
ML-3 106.5-107	106.5-107	0.50	X	X		
ML-3 166.5-167	166.5-167	0.50	X	X		
ML-4 76.5-77	76.5-77	0.50	X	X		
ML-4 126.5-127	126.5-127	0.50	X			
ML-4 146.5-147	146.5-147	0.50	X	X		
ML-6 79.5-80	79.5-80	0.50	X			
ML-6 107.5-108	107.5-108	0.50	X	X		
ML-6 167-168.5	167-168.5	0.50	X	X		
TOTALS:	23 cores	11.50	22	14		23

Project Name: **MPWSP**
Project Number: **13017-13**

PTS File No: **44073**
Client: **Geoscience Support Services**

TEST PROGRAM - 20140206

CORE ID	Depth ft.	Core Recovery ft.	Hydraulic Conductivity Pkg.	Hydraulic Conductivity API RP40/EPA 9100		Notes
		Plugs:	Vert. 1"	Horz. 1"		

Laboratory Test Program Notes

Contaminant identification: **NONE**

Standard TAT for basic analysis is 10 business days.

Hydraulic Conductivity Package – Saturated Zone: Native-state permeability to water, total and air-filled porosity, grain and bulk density, moisture content, total pore fluid (water only) saturation.

PTS Laboratories

PTS File No: 44073
Client: Geoscience Support Services
Report Date: 03/05/14

PHYSICAL PROPERTIES DATA - HYDRAULIC CONDUCTIVITY PACKAGE

Project Name: MPWSP
Project No: 13017-13

		METHODS:	API RP 40 / ASTM D2216	API RP 40		API RP 40		API RP 40	API RP 40; EPA 9100	
									25 PSI CONFINING STRESS	
SAMPLE ID.	DEPTH, ft.	SAMPLE ORIENTATION (1)	MOISTURE CONTENT, % weight	DENSITY		POROSITY, %Vb (2)		TOTAL PORE FLUID SATURATIONS (3), % Pv	EFFECTIVE (4,5) PERMEABILITY TO WATER, millidarcy	HYDRAULIC CONDUCTIVITY (4,5), cm/s
				DRY BULK, g/cc	GRAIN, g/cc	TOTAL	AIR-FILLED			
CX-B1 66.5-67	66.6	V	22.9	1.46	2.66	45.0	11.6	74.2	273	2.76E-04
CX-B1 166.5-167.0	166.6	V	24.7	1.58	2.82	43.8	4.7	89.3	484	4.87E-04
CX-B1 257.5-258	257.5-258	V	41.1	1.11	2.61	57.7	12.2	78.8	1.75	1.75E-06
CX-B2 207.5-208	207.6	V	21.5	1.48	2.67	44.6	12.9	71.1	3820	3.76E-03
CX-B2 259-259.5	259.1	V	31.0	1.33	2.63	49.3	7.9	83.9	1.83	1.85E-06
CX-B3 107.5-108	107.6	V	20.6	1.43	2.64	45.8	16.4	64.2	5210	5.26E-03
CX-B3 129-129.5	129.1	V	35.5	1.25	2.62	52.1	7.6	85.5	2.83	2.86E-06
CX-B3 197.5-198	197.6	V	18.1	1.66	2.69	38.2	8.1	78.8	101	1.00E-04
ML-1 76-76.5	76.1	V	42.4	1.17	2.67	56.1	6.3	88.7	4.89	4.83E-06
ML-1 107.5-108	107.6	V	15.0	1.53	2.65	42.1	19.0	54.8	8540	8.52E-03
ML-1 147-147.5	147.1	V	32.4	1.31	2.66	50.8	8.4	83.4	1.97	1.98E-06
ML-2 87-87.5	87.1	V	20.5	1.50	2.66	43.4	12.7	70.8	101	1.00E-04
ML-2 117.5-118	117.6	V	24.3	1.43	2.64	45.8	11.0	76.0	47.3	4.70E-05
ML-2 157.5-158	157.6	V	19.2	1.52	2.61	41.6	12.3	70.5	110	1.10E-04
ML-3 106.5-107	106.6	V	12.9	1.53	2.64	42.0	22.3	47.0	1900	1.87E-03
ML-3 166.5-167	166.6	V	28.6	1.31	2.65	50.7	13.2	73.9	9.6	9.51E-06
ML-4 76.5-77	76.6	V	21.4	1.41	2.62	46.3	16.2	65.1	954	9.49E-04
ML-4 126.5-127	126.6	V	25.0	1.44	2.64	45.5	9.5	79.1	1.18	1.18E-06
ML-4 146.5-147	146.6	V	14.1	1.45	2.61	44.3	23.8	46.3	6180	6.10E-03
ML-6 79.5-80	79.6	V	32.2	1.33	2.64	49.7	6.9	86.0	2.43	2.43E-06
ML-6 107.5-108	107.6	V	15.0	1.41	2.64	46.3	25.2	45.6	4710	4.65E-03
ML-6 167-168.5	167.6	V	25.6	1.38	2.62	47.4	12.1	74.3	72.6	7.23E-05

(1) Sample Orientation: H = horizontal; V = vertical; R = remold

(2) Total Porosity = all interconnected pore channels; Air Filled = pore channels not occupied by pore fluids.

(3) Fluid density used to calculate pore fluid saturations: Water = 0.9996 g/cc.

(4) Effective (Native) = With as-received pore fluids in place.

(5) Permeability to water and hydraulic conductivity measured at saturated conditions.

Vb = Bulk Volume, cc; Pv = Pore Volume, cc; ND = Not Detected

Water = filtered Laboratory Fresh (tap) or Site water.

PTS Laboratories

PTS File No: 44073
Client: Geoscience Support Services
Report Date: 03/13/14

PHYSICAL PROPERTIES DATA - HYDRAULIC CONDUCTIVITY Rev.01

(Methodology: API RP 40; EPA 9100)

Project Name: MPWSP
Project No: 13017-13

				25 PSI CONFINING STRESS		
SAMPLE ID.	DEPTH, ft.	SAMPLE ORIENTATION (1)	ANALYSIS DATE	EFFECTIVE PERMEABILITY TO WATER (2,3), millidarcy	HYDRAULIC CONDUCTIVITY (3), cm/s	INTRINSIC PERMEABILITY TO WATER (3), cm^2
CX-B1 66.5-67	66.95	H	20140305	1560	1.53E-03	1.54E-08
CX-B1 166.5-167.0	466.95	H	20140305	622	6.10E-04	6.14E-09
CX-B2 207.5-208	207.95	H	20140305	1440	1.41E-03	1.42E-08
CX-B3 107.5-108	107.95	H	20140305	5200	5.12E-03	5.13E-08
CX-B3 197.5-198	197.95	H	20140305	644	6.34E-04	6.35E-09
ML-1 107.5-108	107.95	H	20140305	6330	6.26E-03	6.25E-08
ML-2 117.5-118	117.95	H	20140305	111	1.10E-04	1.10E-09
ML-2 157.5-158	157.95	H	20140305	3270	3.21E-03	3.23E-08
ML-3 106.5-107	106.95	H	20140305	851	8.42E-04	8.40E-09
ML-3 166.5-167	166.95	H	20140305	7.59	7.53E-06	7.49E-11
ML-4 76.5-77	76.95	H	20140305	873	8.68E-04	8.62E-09
ML-4 146.5-147	146.95	H	20140305	12900	1.29E-02	1.28E-07
ML-6 107.5-108	107.95	H	20140305	3990	4.00E-03	3.94E-08
ML-6 167-168.5	167.95	H	20140305	130	1.30E-04	1.28E-09

(1) Sample Orientation: H = horizontal; V = vertical; R = remold

(2) Effective (Native) = With as-received pore fluids in place.

(3) Permeability to water and hydraulic conductivity measured at saturated conditions.
Water = filtered Laboratory Fresh (tap) or Site water.

Project Name: MPWSP
Project Number: 13017-13

PTS File No: 43626
Client: Geoscience Support Services

TEST PROGRAM - 20131002

CORE ID	Depth ft.	Core Recovery ft.	Hydraulic Conductivity Pkg.	Hydraulic Conductivity API RP40/EPA 9100		Notes
		Plugs:	Vert. 1"	Horz. 1"		
Date Received: 20130926						
PR-1 67 ft - 67.5 ft	67-67.5	0.50	X	X		
PR-1 145.5 ft - 146 ft	145.5-146	0.50	X			
PR-1 152 ft - 152.5 ft	152-152.5	0.50	X			
PR-1 200.5 ft - 201 ft	200.5-201	0.50	X	X		
TOTALS:	4 cores	2.00	4	2		4

Laboratory Test Program Notes

Contaminant identification: _____

Standard TAT for basic analysis is 10 business days.

Hydraulic Conductivity Package – Saturated Zone: Native-state permeability to water, total and air-filled porosity, grain and bulk density, moisture content, total pore fluid (water only) saturation.

PTS Laboratories

PTS File No: 43626
Client: Geoscience Support Services
Report Date: 10/14/13

PHYSICAL PROPERTIES DATA - HYDRAULIC CONDUCTIVITY PACKAGE

Project Name: MPWSP
Project No: 13017-13

		METHODS:	API RP 40 / ASTM D2216	API RP 40		API RP 40		API RP 40	API RP 40; EPA 9100	
									25 PSI CONFINING STRESS	
SAMPLE ID.	DEPTH, ft.	SAMPLE ORIENTATION (1)	MOISTURE CONTENT, % weight	DENSITY		POROSITY, %Vb (2)		TOTAL PORE FLUID SATURATIONS (3), % Pv	EFFECTIVE (4,5) PERMEABILITY TO WATER, millidarcy	HYDRAULIC CONDUCTIVITY (4,5), cm/s
				DRY BULK, g/cc	GRAIN, g/cc	TOTAL	AIR-FILLED			
PR-1 67 ft - 67.5 ft	67.2	V	15.1	1.69	2.59	34.8	9.4	73.0	91.1	9.13E-05
PR-1 145.5 ft - 146 ft	145.6	V	28.6	1.38	2.68	48.5	9.0	81.4	2.08	2.08E-06
PR-1 152 ft - 152.5 ft	152.1	V	27.1	1.45	2.72	46.5	7.1	84.8	2.03	2.04E-06
PR-1 200.5 ft - 201 ft	200.65	V	16.5	1.61	2.67	39.8	13.3	66.6	5120	5.10E-03

(1) Sample Orientation: H = horizontal; V = vertical; R = remold
(2) Total Porosity = all interconnected pore channels; Air Filled = pore channels not occupied by pore fluids.
(3) Fluid density used to calculate pore fluid saturations: Water = 0.9996 g/cc.
(4) Effective (Native) = With as-received pore fluids in place.
(5) Permeability to water and hydraulic conductivity measured at saturated conditions.
Vb = Bulk Volume, cc; Pv = Pore Volume, cc; ND = Not Detected
Water = filtered Laboratory Fresh (tap) or Site water.

PTS Laboratories

PTS File No: 43626
Client: Geoscience Support Services
Report Date: 10/14/13

PHYSICAL PROPERTIES DATA - HYDRAULIC CONDUCTIVITY

(Methodology: API RP 40; EPA 9100)

Project Name: MPWSP
Project No: 13017-13

				25 PSI CONFINING STRESS		
SAMPLE ID.	DEPTH, ft.	SAMPLE ORIENTATION (1)	ANALYSIS DATE	EFFECTIVE PERMEABILITY TO WATER (2,3), millidarcy	HYDRAULIC CONDUCTIVITY (3), cm/s	INTRINSIC PERMEABILITY TO WATER (3), cm^2
PR-1 67 ft - 67.5 ft	67.05	H	20131010	61.1	6.03E-05	6.03E-10
PR-1 200.5 ft - 201 ft	200.55	H	20131010	269	2.73E-04	2.65E-09

(1) Sample Orientation: H = horizontal; V = vertical; R = remold

(2) Effective (Native) = With as-received pore fluids in place.

(3) Permeability to water and hydraulic conductivity measured at saturated conditions.
Water = filtered Laboratory Fresh (tap) or Site water.

PTS Laboratories, Inc.

CHAIN OF CUSTODY RECORD

PAGE Appendix **OF**

COMPANY	Geoscience Support Services
ADDRESS	PO 220
CITY	Claremont, CA
ZIP CODE	91711
PROJECT MANAGER	Brian Villalobos
	bvillalobos@geoscience-water.com
PROJECT NAME	MPWSP
PHONE NUMBER	909-451-6650
PROJECT NUMBER	13017-13
FAX NUMBER	909-451-6638
SITE LOCATION	CEMEX
SAMPLER SIGNATURE	

ANALYSIS REQUEST

PO# 13017-13

TURNAROUND TIME: 24 HOURS [ ] 48 HOURS [ ] 72 HOURS [ ] 5 DAYS [ ] NORMAL [X] OTHER: _____

SAMPLE INTEGRITY (CHECK): INTACT X ON ICE ___

PTS QUOTE NO.

PTS FILE: 44073

SAMPLE ID NUMBER	DATE	TIME	DEPTH, FT	NUMBER OF SAMPLES	SOIL PROPERTIES PACKAGE	HYDRAULIC CONDUCTIVITY PACKAGE	PORE FLUID SATURATIONS PACKAGE	TOPOGENIC PROPERTIES PACKAGE	CAPILLARITY PACKAGE	FLUID PROPERTIES PACKAGE	PHOTOLOGICAL CORE PHOTOGRAPHY	MOISTURE CONTENT, ASTM D2216	POROSITY, TOTAL, APPROX	POROSITY, EFFECTIVE, ASTM D425M	SPECIFIC GRAVITY, ASTM D854	BULK DENSITY (DRY), APPROX or ASTM D2937	AIR PERMEABILITY, APPROX	HYDRAULIC CONDUCTIVITY, LP9100, APPROX, ASTM D422/4464M	GRAIN SIZE DISTRIBUTION, ASTM D422/4464M	TOO WALKLY BLACK	ATTERBERG LIMITS, ASTM D4318	Horizontal Conductivity				COMMENTS
CX-B1 66.5-67	10/22/13	1500	66.5-67	1		X																X				
CX-B1 166.5-167.0	10/23/13	1500	166.5-167	1		X																X				
CX-B1 257.5-258	10/25/13	1500	257.5-258	1		X																X				2 inches of sample missing
CX-B2 207.5-208	11/5/13	1345	207.5-208	1		X																X				
CX-B2 259-259.5	11/6/13	1000	259-259.5	1		X																X				
CX-B3 107.5-108	11/10/13	1500	107.5-108	1		X																X				
CX-B3 129-129.5	11/10/13	1500	129-129.5	1		X																X				
CX-B3 177.5-178	11/10/13	1500	177.5-178	1		X																X				
CX-B3 197.5-198	11/10/13	1500	197.5-198	1		X																X				
																										76°F

1. RELINQUISHED BY	2. RECEIVED BY	3. RELINQUISHED BY	4. RECEIVED BY
Nathan Reynolds [signature]	[signature]	[signature]	[signature]
COMPANY: GEOSCIENCE	COMPANY: Geoscience	COMPANY: Geoscience	COMPANY: PTS LABS
DATE: 2-3-14 TIME: 17:00	DATE: 2-3-14 TIME: 17:00	DATE: 2-4-14 TIME: 10:26	DATE: 2/4/14 TIME: 10:26

PTS Laboratories Inc. • 8100 Secura Way • Santa Fe Springs, CA 90670 • Phone (562) 347-2500 • Fax (562) 907-3610

PTS Laboratories, Inc.

CHAIN OF CUSTODY RECORD

PAGE Appendix C OF

COMPANY	Geoscience Support Services
ADDRESS	PO 220
CITY	Claremont, CA
ZIP CODE	91711
PROJECT MANAGER	Brian Villalobos bvillalobos@geoscience-water.com
PROJECT NAME	MPWSP
PHONE NUMBER	909-451-6650
PROJECT NUMBER	13017-13
FAX NUMBER	909-451-6638
SITE LOCATION	Sandholdt dr area, Moss Landing
SAMPLER SIGNATURE	

PO# 13017-13

TURNAROUND TIME: 24 HOURS ☐ 48 HOURS ☐ 72 HOURS ☐ 5 DAYS ☐ NORMAL ☑ OTHER: _____

SAMPLE INTEGRITY (CHECK): INTACT X ON ICE ____

PTS QUOTE NO.

PTS FILE: 44073

ANALYSIS REQUEST

SAMPLE ID NUMBER	DATE	TIME	DEPTH, FT	NUMBER OF SAMPLES	SOIL PROPERTIES PACKAGE	HYDRAULIC CONDUCTIVITY PACKAGE	PORE FLUID SATURATIONS PACKAGE	TOPOGENOIC PROPERTIES PACKAGE	CAPILLARITY PACKAGE	FLUID PROPERTIES PACKAGE	PHOTOLOGY CORE PHOTOGRAPHY	MOISTURE CONTENT, ASTM D2216	POROSITY TOTAL, API RP40	POROSITY EFFECTIVE, ASTM D425M	SPECIFIC GRAVITY, ASTM D854	BULK DENSITY (DRY), API RP40 or ASTM D2937	AIR PERMEABILITY, API RP40	HYDRAULIC CONDUCTIVITY, EPA8100, API RP40, D5084	GRAIN SIZE DISTRIBUTION, ASTM D422/4464M	TOC, WALKLEY-BLACK	ATTERBERG LIMITS, ASTM D4318	Horizontal Conductivity				COMMENTS
ML-1 76-76.5	10/3/13	10:30	76-76.5	1		X																X				
ML-1 107.5-108	10/3/13	13:10	107.5-108	1		X																X				
ML-1 147-147.5	10/3/13	14:00	147-147.5	1		X																X				

76°F

1. RELINQUISHED BY	2. RECEIVED BY	3. RELINQUISHED BY	4. RECEIVED BY
Matthew Reynolds	[illegible]	[illegible]	[illegible]
COMPANY: GEOSCIENCE	COMPANY: Geoscience	COMPANY: Geoscience	COMPANY: PTS LABS
DATE: 2-3-14 TIME: 17:00	DATE: 2-4-14 TIME: 17:00	DATE: 2-4-14 TIME: 10:26	DATE: 2/4/14 TIME: 10:26

PTS Laboratories, Inc. • 8100 Secura Way • Santa Fe Springs, CA 90670 • Phone (562) 347-2500 • Fax (562) 907-3610

PTS Laboratories, Inc.

CHAIN OF CUSTODY RECORD

PAGE Appendix C OF

COMPANY	Geoscience Support Services
ADDRESS	PO 220
CITY	Claremont, CA
ZIP CODE	91711
PROJECT MANAGER	Brian Villalobos bvillalobos@geoscience-water.com
PROJECT NAME	MPWSP
PHONE NUMBER	909-451-6650
PROJECT NUMBER	13017-13
FAX NUMBER	909-451-6638
SITE LOCATION	Del Mar Fisheries, Moss Landing
SAMPLER SIGNATURE	

PO# 13017-13

TURNAROUND TIME: 24 HOURS ☐ 48 HOURS ☐ 72 HOURS ☐ 5 DAYS ☐ NORMAL ☒

OTHER: _____

SAMPLE INTEGRITY (CHECK): INTACT X ON ICE ____

PTS QUOTE NO.

PTS FILE: 44073

ANALYSIS REQUEST

SAMPLE ID NUMBER	DATE	TIME	DEPTH, FT	NUMBER OF SAMPLES	SOIL PROPERTIES PACKAGE	HYDRAULIC CONDUCTIVITY PACKAGE	PORE FLUID SATURATIONS PACKAGE	ICE CONTROL PROPERTIES PACKAGE	CAPILLARITY PACKAGE	FLUID PROPERTIES PACKAGE	PHOTOLOG: CORE PHOTOGRAPHY	MOISTURE CONTENT, ASTM D2216	POROSITY: TOTAL, API RP40	POROSITY: EFFECTIVE, ASTM D425M	SPECIFIC GRAVITY, ASTM D854	BULK DENSITY (DRY), API RP40 or ASTM D2937	AIR PERMEABILITY, API RP40	HYDRAULIC CONDUCTIVITY, EPA9100, API RP40, D5084	GRAIN SIZE DISTRIBUTION, ASTM D422/4464M	TOC: WALKLEY BLACK	ATTERBERG LIMITS, ASTM D4318	Horizontal Conductivity				COMMENTS
ML-2 87-87.5	12/9/13	1610	87-87.5	1		X																X				
ML-2 117.5-118	12/10/13	0935	117.5-118	1		X																X				
ML-2 157.5-158	12/10/13	1430	157.5-158	1		X																X				

76F

1. RELINQUISHED BY	2. RECEIVED BY	3. RELINQUISHED BY	4. RECEIVED BY
Nathan Reynolds / [signature]	Andrea Keta / [signature]	[signature]	[signature]
COMPANY: GEOSCIENCE	COMPANY: Geoscience	COMPANY: Geoscience	COMPANY: PTS LABS
DATE: 2-3-14 TIME: 17:00	DATE: 2-3-14 TIME: 17:00	DATE: 2-4-14 TIME: 10:26	DATE: 2/4/14 TIME: 10:26

PTS Laboratories, Inc. • 8100 Secura Way • Santa Fe Springs, CA 90670 • Phone (562) 347-2500 • Fax (562) 907-3610

PTS Laboratories, Inc.

CHAIN OF CUSTODY RECORD

PAGE Appendix C OF

COMPANY: Geoscience Support Services		
ADDRESS: PO 220	CITY: Claremont, CA	ZIP CODE: 9171[illegible]
PROJECT MANAGER: Brian Villalobos	bvillalobos@geoscience-water.com	
PROJECT NAME: MPWSP	PHONE NUMBER: 909-451-6650	
PROJECT NUMBER: 13017-13	FAX NUMBER: 909-451-6638	
SITE LOCATION: Moss Landing, Nadar Agha property		
SAMPLER SIGNATURE:		

ANALYSIS REQUEST

PO# 13017-13

TURNAROUND TIME
24 HOURS ☐ 5 DAYS ☐
48 HOURS ☐ NORMAL ☒
72 HOURS ☐
OTHER: _____

SAMPLE INTEGRITY (CHECK):
INTACT X ON ICE ____

PTS QUOTE NO.:

PTS FILE: 44073

SAMPLE ID NUMBER	DATE	TIME	DEPTH, FT	NUMBER OF SAMPLES	SOIL PROPERTIES PACKAGE	HYDRAULIC CONDUCTIVITY PACKAGE	PORE FLUID SATURATIONS PACKAGE	ION EXCHANGE CAPACITY PACKAGE	CAPILLARITY PACKAGE	FLUID PROPERTIES PACKAGE	PHOTOMICROGRAPHY	MOISTURE CONTENT, ASTM D2216	POROSITY, TOTAL, API RP40	POROSITY, EFFECTIVE, ASTM D4525M	SPECIFIC GravITY, ASTM D854	BULK DENSITY (DRY), API RP40 or ASTM D2937	AIR PERMEABILITY, API RP40	HYDRAULIC CONDUCTIVITY, FALLING HEAD, API RP40	GRAIN SIZE DISTRIBUTION, ASTM D422/D4464	TOC, WALKLEY-BLACK	ATTERBERG LIMITS, ASTM D4318	Hg Porosimetry			COMMENTS
ML-3 106.5-107	1/7/14	1600	106.5-107	1		X																X			
ML-3 166.5-167	1/8/14	1360	166.5-167	1		X																X			
ML-4 76.5-77	11/26/13	1320	76.5-77	1		X																X			
ML-4 126.5-127	12/2/13	1350	126.5-127	1		X																X			
ML-4 146.5-147	12/2/13	1745	146.5-147	1		X																X			

76 °F

1. RELINQUISHED BY	2. RECEIVED BY	3. RELINQUISHED BY	4. RECEIVED BY
Nathan Reynolds			
COMPANY: GEOSCIENCE	COMPANY: GEOSCIENCE	COMPANY: GEOSCIENCE	COMPANY: PTS LABS
DATE: 2-3-14 TIME: 17:00	DATE: 2-3-14 TIME: 17:00	DATE: 2-4-14 TIME: 10:26	DATE: 2/4/14 TIME: 10:26

PTS Laboratories, Inc. • 8100 Secura Way • Santa Fe Springs, CA 90670 • Phone (562) 347-2500 • Fax (562) 907-3510

PTS Laboratories, Inc.

CHAIN OF CUSTODY RECORD

COMPANY	Geoscience Support Services
ADDRESS	PO 220
CITY	Claremont, CA
ZIP CODE	91711
PROJECT MANAGER	Brian Villalobos
EMAIL	bvillalobos@geoscience-water.com
PROJECT NAME	MPWSP
PHONE NUMBER	909-451-6650
PROJECT NUMBER	13017-13
FAX NUMBER	909-451-6638
SITE LOCATION	MBARI, Moss Landing
SAMPLER SIGNATURE	

ANALYSIS REQUEST

PO# 13017-13

TURNAROUND TIME
24 HOURS [ ] 5 DAYS
48 HOURS [ ] NORMAL [X]
72 HOURS [ ]
OTHER: _____ _____

SAMPLE INTEGRITY (CHECK)
INTACT X ON ICE ____

PTS QUOTE NO.

PTS FILE: 44073

SAMPLE ID NUMBER	DATE	TIME	DEPTH, FT	NUMBER OF SAMPLES	SOIL PROPERTIES PACKAGE	HYDRAULIC CONDUCTIVITY PACKAGE	POINT FLUID SATURATIONS PACKAGE	DISPERSIVITY PROPERTIES PACKAGE	CAPILLARITY PACKAGE	FLUID PROPERTIES PACKAGE	PHOTOMICROGRAPHY	MOISTURE CONTENT, ASTM D2216	POROSITY, TOTAL, API RP40	PERMEABILITY, EFFECTIVE, ASTM D4525M	SPECIFIC GRAVITY, ASTM D854	BULK DENSITY (DRY), API RP40 or ASTM D2937	AIR PERMEABILITY, API RP40	HYDRAULIC CONDUCTIVITY, FLEXIBLE WALL, API RP40, D5084	GRAIN SIZE DISTRIBUTION, ASTM D422M/D4464M	TOC, WALKLEY-BLACK	ATTERBERG LIMITS, ASTM D4318	Hexavalent Chromium			COMMENTS
ML-6 79.5-80	11/19/13	1310	79.5-80	1		X																X			
ML-6 107.5-108	11/19/13	1320	107.5-108	1		X																X			
ML-6 167-168.5	11/20/13	0935	167-168.5	1		X																X			

76F

1. RELINQUISHED BY	2. RECEIVED BY	3. RELINQUISHED BY	4. RECEIVED BY
COMPANY: GEOSCIENCE	COMPANY: PTS	COMPANY: GeoScience	COMPANY: PTS LABS
DATE: 2-3-14 TIME: 17:00	DATE: 2-3-14 TIME: 17:00	DATE: 2-4-14 TIME: 10:26	DATE: 2/4/14 TIME: 10:26

PTS Laboratories, Inc. • 8100 Secura Way • Santa Fe Springs, CA 90670 • Phone (562) 347-2500 • Fax (562) 907-3610

PTS Laboratories, Inc.

CHAIN OF CUSTODY RECORD

PAGE OF

COMPANY: Geoscience Support Services

ADDRESS: PO 220 | CITY: Claremont, CA | ZIP CODE: 91711

PROJECT MANAGER: Brian Villalobos | bvillalobos@geoscience-water.com

PROJECT NAME: MPWSP | PHONE NUMBER: 909-451-6650

PROJECT NUMBER: 13017-13 | FAX NUMBER: 909-451-6638

SITE LOCATION: Potrero Rd Parking Area, Moss Landing

SAMPLER SIGNATURE:

PO#:

TURNAROUND TIME
24 HOURS ☐ 5 DAYS ☐
48 HOURS ☐ NORMAL ☐
72 HOURS ☐
OTHER

SAMPLE INTEGRITY CHECK
INTACT X ON ICE

PTS QUOTE NO.:

PTS FILE: 43626

ANALYSIS REQUEST

SAMPLE ID NUMBER	DATE	TIME	DEPTH FT	NUMBER OF SAMPLES	SOIL PROPERTIES PACKAGE	HYDRAULIC CONDUCTIVITY PACKAGE	PORE FLUID SATURATIONS PACKAGE	ION MINERALOGY PACKAGE	CAPILLARITY PACKAGE	FLUID PROPERTIES PACKAGE	PRESSURE CORE GAMMA PHOTOGRAPHY	MOISTURE CONTENT, ASTM D2216	POROSITY, TOTAL API RP40	BOREHOLE EFFECTIVE AGING PROGRAM	SWCTC IC CHARGE ASTM D4327	BULK DENSITY (DRY), API RP40 OR ASTM D2937	AIR PERMEABILITY API RP40	HYDRAULIC CONDUCTIVITY, FLEXIBLE WALL, ASTM D5084	GRAIN SIZE DISTRIBUTION, ASTM D422/D1140	TOC, WALKLEY BLACK	ATTERBERG LIMITS, ASTM D4318	Hydrocarbon Compatibility			COMMENTS
PR-1 67 ft - 67.5 ft	9/23/13	1500	67 - 67.5	1		X															X				
PR-1 145.5 ft -146 ft	9/23/13	1400	145.5 - 146	1		X															X				Road @ 74°F
PR-1 152 ft - 152.5 ft	9/23/13	1420	152 -152.5	1		X															X				
PR-1 200.5 ft - 201 ft	9/23/13	1730	200.5 -201	1		X															X				

1. RELINQUISHED BY: [signature] | COMPANY: GeoScience | DATE: 9/24/13 | TIME: [illegible]

2. RECEIVED BY: [signature] | COMPANY: GeoScience | DATE: 9/24/13 | TIME: 10:40

3. RELINQUISHED BY: [signature] | COMPANY: GeoScience | DATE: 9/24/13 | TIME: 11:45

4. RECEIVED BY: [signature] | COMPANY: PTS 43626 | DATE: 9/24/13 | TIME: 11:45

PTS Laboratories Inc. • 5100 Secura Way • Santa Fe Springs, CA 90670 • Phone (562) 347-2500 • Fax (562) 907-3610

Project Name: MPWSP
Project Number: 13017-13

PTS File No: 44073
Client: Geoscience Support Services

TEST PROGRAM - 20140206

CORE ID	Depth ft.	Core Recovery ft.	Hydraulic Conductivity Pkg.	Hydraulic Conductivity API RP40/EPA 9100		Notes
		Plugs:	Vert. 1"	Horz. 1"		
Date Received: 20140204						
CX-B1 66.5-67	66.5-67	0.50	X	X		
CX-B1 166.5-167.0	166.5-167.0	0.50	X	X		
CX-B1 257.5-258	257.5-258	0.50	X			
CX-B2 207.5-208	207.5-208	0.50	X	X		
CX-B2 259-259.5	259-259.5	0.50	X			
CX-B3 107.5-108	107.5-108	0.50	X	X		
CX-B3 129-129.5	129-129.5	0.50	X			
CX-B3 177.5-178	177.5-178	0.50				
CX-B3 197.5-198	197.5-198	0.50	X	X		
ML-1 76-76.5	76-76.5	0.50	X			
ML-1 107.5-108	107.5-108	0.50	X	X		
ML-1 147-147.5	147-147.5	0.50	X			
ML-2 87-87.5	87-87.5	0.50	X			
ML-2 117.5-118	117.5-118	0.50	X	X		
ML-2 157.5-158	157.5-158	0.50	X	X		
ML-3 106.5-107	106.5-107	0.50	X	X		
ML-3 166.5-167	166.5-167	0.50	X	X		
ML-4 76.5-77	76.5-77	0.50	X	X		
ML-4 126.5-127	126.5-127	0.50	X			
ML-4 146.5-147	146.5-147	0.50	X	X		
ML-6 79.5-80	79.5-80	0.50	X			
ML-6 107.5-108	107.5-108	0.50	X	X		
ML-6 167-168.5	167-168.5	0.50	X	X		
TOTALS:	23 cores	11.50	22	14		23

Project Name: **MPWSP** **PTS File No:** **44073**
Project Number: **13017-13** **Client:** **Geoscience Support Services**

TEST PROGRAM - 20140206

CORE ID	Depth ft.	Core Recovery ft.	Hydraulic Conductivity Pkg.	Hydraulic Conductivity API RP40/EPA 9100		Notes
		Plugs:	Vert. 1"	Horz. 1"		

Laboratory Test Program Notes

Contaminant identification: **NONE**

Standard TAT for basic analysis is 10 business days.

Hydraulic Conductivity Package – Saturated Zone: Native-state permeability to water, total and air-filled porosity, grain and bulk density, moisture content, total pore fluid (water only) saturation.

PTS Laboratories

PTS File No: 44073
Client: Geoscience Support Services
Report Date: 03/13/14

PHYSICAL PROPERTIES DATA - HYDRAULIC CONDUCTIVITY PACKAGE Rev.01

Project Name: MPWSP
Project No: 13017-13

		METHODS:	API RP 40 / ASTM D2216	API RP 40		API RP 40		API RP 40	API RP 40; EPA 9100	
									25 PSI CONFINING STRESS	
SAMPLE ID.	DEPTH, ft.	SAMPLE ORIENTATION (1)	MOISTURE CONTENT, % weight	DENSITY		POROSITY, %Vb (2)		TOTAL PORE FLUID SATURATIONS (3), % Pv	EFFECTIVE (4,5) PERMEABILITY TO WATER, millidarcy	HYDRAULIC CONDUCTIVITY (4,5), cm/s
				DRY BULK, g/cc	GRAIN, g/cc	TOTAL	AIR-FILLED			
CX-B1 66.5-67	66.6	V	22.9	1.46	2.66	45.0	11.6	74.2	273	2.76E-04
CX-B1 166.5-167.0	166.6	V	24.7	1.58	2.82	43.8	4.7	89.3	484	4.87E-04
CX-B1 257.5-258	257.5-258	V	41.1	1.11	2.61	57.7	12.2	78.8	1.75	1.75E-06
CX-B2 207.5-208	207.6	V	21.5	1.48	2.67	44.6	12.9	71.1	3820	3.76E-03
CX-B2 259-259.5	259.1	V	31.0	1.33	2.63	49.3	7.9	83.9	1.83	1.85E-06
CX-B3 107.5-108	107.6	V	20.6	1.43	2.64	45.8	16.4	64.2	5210	5.26E-03
CX-B3 129-129.5	129.1	V	35.5	1.25	2.62	52.1	7.6	85.5	2.83	2.86E-06
CX-B3 197.5-198	197.6	V	18.1	1.66	2.69	38.2	8.1	78.8	101	1.00E-04
ML-1 76-76.5	76.1	V	42.4	1.17	2.67	56.1	6.3	88.7	4.89	4.83E-06
ML-1 107.5-108	107.6	V	15.0	1.53	2.65	42.1	19.0	54.8	8540	8.52E-03
ML-1 147-147.5	147.1	V	32.4	1.31	2.66	50.8	8.4	83.4	1.97	1.98E-06
ML-2 87-87.5	87.1	V	20.5	1.50	2.66	43.4	12.7	70.8	101	1.00E-04
ML-2 117.5-118	117.6	V	24.3	1.43	2.64	45.8	11.0	76.0	47.3	4.70E-05
ML-2 157.5-158	157.6	V	19.2	1.52	2.61	41.6	12.3	70.5	110	1.10E-04
ML-3 106.5-107	106.6	V	12.9	1.53	2.64	42.0	22.3	47.0	1900	1.87E-03
ML-3 166.5-167	166.6	V	28.6	1.31	2.65	50.7	13.2	73.9	9.6	9.51E-06
ML-4 76.5-77	76.6	V	21.4	1.41	2.62	46.3	16.2	65.1	954	9.49E-04
ML-4 126.5-127	126.6	V	25.0	1.44	2.64	45.5	9.5	79.1	1.18	1.18E-06
ML-4 146.5-147	146.6	V	14.1	1.45	2.61	44.3	23.8	46.3	6180	6.10E-03
ML-6 79.5-80	79.6	V	32.2	1.33	2.64	49.7	6.9	86.0	2.43	2.43E-06
ML-6 107.5-108	107.6	V	15.0	1.41	2.64	46.3	25.2	45.6	4710	4.65E-03
ML-6 167-168.5	167.6	V	25.6	1.38	2.62	47.4	12.1	74.3	72.6	7.23E-05

(1) Sample Orientation: H = horizontal; V = vertical; R = remold

(2) Total Porosity = all interconnected pore channels; Air Filled = pore channels not occupied by pore fluids.

(3) Fluid density used to calculate pore fluid saturations: Water = 0.9996 g/cc.

(4) Effective (Native) = With as-received pore fluids in place.

(5) Permeability to water and hydraulic conductivity measured at saturated conditions.

Vb = Bulk Volume, cc; Pv = Pore Volume, cc; ND = Not Detected

Water = filtered Laboratory Fresh (tap) or Site water.

PTS Laboratories, Inc.

CHAIN OF CUSTODY RECORD

PAGE Appendix OF

COMPANY	Geoscience Support Services
ADDRESS	PO 220
CITY	Claremont, CA
ZIP CODE	91711
PROJECT MANAGER	Brian Villalobos
	bvillalobos@geoscience-water.com
PROJECT NAME	MPWSP
PHONE NUMBER	909-451-6650
PROJECT NUMBER	13017-13
FAX NUMBER	909-451-6638
SITE LOCATION	CEMEX
SAMPLER SIGNATURE	

ANALYSIS REQUEST

PO# 13017-13

TURNAROUND TIME: 24 HOURS [ ] 48 HOURS [ ] 72 HOURS [ ] 5 DAYS [ ] NORMAL [X] OTHER: ____

SAMPLE INTEGRITY (CHECK): INTACT X ON ICE ____

PTS QUOTE NO.

PTS FILE: 44073

SAMPLE ID NUMBER	DATE	TIME	DEPTH, FT	NUMBER OF SAMPLES	SOIL PROPERTIES PACKAGE	HYDRAULIC CONDUCTIVITY PACKAGE	PORE FLUID SATURATIONS PACKAGE	TOPOGENOUS PROPERTIES PACKAGE	CAPILLARITY PACKAGE	FLUID PROPERTIES PACKAGE	PHOTOLOGICAL CORE PHOTOGRAPHY	MOISTURE CONTENT, ASTM D2216	POROSITY, TOTAL, API RP40	POROSITY, EFFECTIVE, ASTM D425M	SPECIFIC GRAVITY, ASTM D854	BULK DENSITY (DRY), API RP40 or ASTM D2937	AIR PERMEABILITY, API RP40	HYDRAULIC CONDUCTIVITY, LP9100, API RP40, D5084	GRAIN SIZE DISTRIBUTION, ASTM D422/4464M	TOO WALKLY BLACK	ATTERBERG LIMITS, ASTM D4318	Horizontal Conductivity				COMMENTS
CX-B1 66.5-67	10/22/13	1500	66.5-67	1		X																X				
CX-B1 166.5-167.0	10/23/13	1500	166.5-167	1		X																X				
CX-B1 257.5-258	10/25/13	1500	257.5-258	1		X																X				2 inches of sample missing
CX-B2 207.5-208	11/5/13	1345	207.5-208	1		X																X				
CX-B2 259-259.5	11/6/13	1000	259-259.5	1		X																X				
CX-B3 107.5-108	11/10/13	1500	107.5-108	1		X																X				
CX-B3 129-129.5	11/10/13	1500	129-129.5	1		X																X				
CX-B3 177.5-178	11/10/13	1500	177.5-178	1		X																X				
CX-B3 197.5-198	11/10/13	1500	197.5-198	1		X																X				
																										76°F

1. RELINQUISHED BY	2. RECEIVED BY	3. RELINQUISHED BY	4. RECEIVED BY
Nathan Reynolds	[signature]	[signature]	[signature]
COMPANY: GEOSCIENCE	COMPANY: Geoscience	COMPANY: Geoscience	COMPANY: PTS LABS
DATE: 2-3-14 TIME: 17:00	DATE: 2-3-14 TIME: 17:00	DATE: 2-4-14 TIME: 10:26	DATE: 2/4/14 TIME: 10:26

PTS Laboratories Inc. • 8100 Secura Way • Santa Fe Springs, CA 90670 • Phone (562) 347-2500 • Fax (562) 907-3610

PTS Laboratories, Inc.

CHAIN OF CUSTODY RECORD

PAGE Appendix C OF

COMPANY: Geoscience Support Services		
ADDRESS: PO 220	CITY: Claremont, CA	ZIP CODE: 91711
PROJECT MANAGER: Brian Villalobos	bvillalobos@geoscience-water.com	
PROJECT NAME: MPWSP	PHONE NUMBER: 909-451-6650	
PROJECT NUMBER: 13017-13	FAX NUMBER: 909-451-6638	
SITE LOCATION: Sandholdt dr area, Moss Landing		
SAMPLER SIGNATURE:		

ANALYSIS REQUEST

PO# 13017-13

TURNAROUND TIME
24 HOURS [ ] 5 DAYS [ ]
48 HOURS [ ] NORMAL [X]
72 HOURS [ ]
OTHER: _____

SAMPLE INTEGRITY (CHECK):
INTACT X ON ICE ____

PTS QUOTE NO.:

PTS FILE: 4403

SAMPLE ID NUMBER	DATE	TIME	DEPTH, FT	NUMBER OF SAMPLES	SOIL PROPERTIES PACKAGE	HYDRAULIC CONDUCTIVITY PACKAGE	PORE FLUID SATURATIONS PACKAGE	CORE INDEX PROPERTIES PACKAGE	EQUILIBRIUM PACKAGE	FLUID PROPERTIES PACKAGE	PHOTOLOGIC CORE PHOTOGRAPHY	MOISTURE CONTENT, ASTM D2216	POROSITY TOTAL, API RP40	POROSITY EFFECTIVE, ASTM D4525M	SPECIFIC GRAVITY, ASTM D854	BULK DENSITY (DRY), API RP40 OR ASTM D2937	AIR PERMEABILITY, API RP40	HYDRAULIC CONDUCTIVITY, FALLING HEAD, API RP40	GRAIN SIZE DISTRIBUTION, ASTM D422/4464M	TDS, WALMLY-BLACK	ATTERBERG LIMITS, ASTM D4318	Hydraulic Conductivity			COMMENTS
ML-1 76-76.5	10/3/13	10:30	76-76.5	1		X																X			
ML-1 107.5-108	10/3/13	13:10	107.5-108	1		X																X			
ML-1 147-147.5	10/3/13	14:00	147-147.5	1		X																X			
																									76°F

1. RELINQUISHED BY	2. RECEIVED BY	3. RELINQUISHED BY	4. RECEIVED BY
Nathan Franklin			
COMPANY: GEOSCIENCE	COMPANY:	COMPANY: GEOSCIENCE	COMPANY: PTS LABS
DATE: 2-3-14 TIME: 17:00	DATE: 2-4-14 TIME: 10:26	DATE: 2-4-14 TIME: 10:26	DATE: 2/4/14 TIME: 10:26

PTS Laboratories Inc. • 8100 Secura Way • Santa Fe Springs, CA 90670 • Phone (562) 347-2500 • Fax (562) 907-3610

PTS Laboratories, Inc.

CHAIN OF CUSTODY RECORD

COMPANY: Geoscience Support Services		PO# 13017-13
ADDRESS: PO 220	CITY: Claremont, CA	ZIP CODE: 91711
PROJECT MANAGER: Brian Villalobos	bvillalobos@geoscience-water.com	
PROJECT NAME: MPWSP	PHONE NUMBER: 909-451-6650	
PROJECT NUMBER: 13017-13	FAX NUMBER: 909-451-6638	
SITE LOCATION: Del Mar Fisheries, Moss Landing		
SAMPLER SIGNATURE:		

TURNAROUND TIME
24 HOURS ☐ 5 DAYS ☐
48 HOURS ☐ NORMAL ☑
72 HOURS ☐
OTHER: _____

SAMPLE INTEGRITY (CHECK):
INTACT ☑ ON ICE ☐

PTS QUOTE NO.:

PTS FILE: 44073

SAMPLE ID NUMBER	DATE	TIME	DEPTH, FT	NUMBER OF SAMPLES	SOIL HYDRAULIC PROPERTIES PACKAGE	HYDRAULIC CONDUCTIVITY PACKAGE	PORE FLUID SATURATIONS PACKAGE	ION EXCHANGE PROPERTIES PACKAGE	CAPILLARITY PACKAGE	FLUID PROPERTIES PACKAGE	PHOTOGRAPHY	MOISTURE CONTENT, ASTM D2216	CONSOLIDITY, TOTAL, API RP40	POROSITY, API RP40	SPECIFIC GRAVITY, ASTM D854	BULK DENSITY (DRY), API RP40 or ASTM D2937	AIR ENTRY, API RP40	HYDRAULIC CONDUCTIVITY, EPA9100, API RP40, D5084	GRAIN SIZE DISTRIBUTION, ASTM D422/4464M	TOC WALKLEY BLACK	ATTERBERG LIMITS, ASTM D4318	Hydrocarbon Quantity			COMMENTS
ML-2 87-87.5	12/9/13	1610	87-87.5	1		X																X			
ML-2 117.5-118	12/10/13	0935	117.5-118	1		X																X			
ML-2 157.5-158	12/10/13	1430	157.5-158	1		X																X			

1. RELINQUISHED BY	2. RECEIVED BY	3. RELINQUISHED BY	4. RECEIVED BY
Nathan Reynolds / Matt Thayer	[illegible]	[illegible]	[illegible]
COMPANY: GEOSCIENCE	COMPANY: [illegible]	COMPANY: Geoscience	COMPANY: PTS LABS
DATE: 2-3-14 TIME: 17:00	DATE: 2-3-14 TIME: 2200	DATE: 2-4-14 TIME: 10:00	DATE: 2/4/14 TIME: 10:20

PTS Laboratories, Inc. • 8100 Secura Way • Santa Fe Springs, CA 90670 • Phone (562) 347-2500 • Fax (562) 907-3610

PTS Laboratories, Inc.

CHAIN OF CUSTODY RECORD

COMPANY	Geoscience Support Services
ADDRESS	PO 220
CITY	Claremont, CA
ZIP CODE	9171[illegible]
PROJECT MANAGER	Brian Villalobos
EMAIL	bvillalobos@geoscience-water.com
PROJECT NAME	MPWSP
PHONE NUMBER	909-451-6650
PROJECT NUMBER	13017-13
FAX NUMBER	909-451-6638
SITE LOCATION	Moss Landing, Nadar Agha property
SAMPLER SIGNATURE	

ANALYSIS REQUEST

PO# 13017-13

TURNAROUND TIME
24 HOURS ☐ 5 DAYS ☐
48 HOURS ☐ NORMAL ☒
72 HOURS ☐
OTHER: _____

SAMPLE INTEGRITY (CHECK):
INTACT X ON ICE ____

PTS QUOTE NO.

PTS FILE: 44073

SAMPLE ID NUMBER	DATE	TIME	DEPTH, FT	NUMBER OF SAMPLES	SOIL PROPERTIES PACKAGE	HYDRAULIC CONDUCTIVITY PACKAGE	PORE FLUID SATURATIONS PACKAGE	HYDROCARBON PROPERTIES PACKAGE	CAPILLARITY PACKAGE	FLUID PROPERTIES PACKAGE	PHOTOMICROGRAPHY	MOISTURE CONTENT, ASTM D2216	POROSITY, TOTAL, API RP40	POROSITY, EFFECTIVE, ASTM D4525M	SPECIFIC GravITY, ASTM D854	BULK DENSITY (DRY), API RP40 or ASTM D2937	AIR PERMEABILITY, API RP40	HYDRAULIC CONDUCTIVITY, FALLING HEAD, API RP40	GRAIN SIZE DISTRIBUTION, ASTM D422/4464M	TOC, WALKLEY-BLACK	ATTERBERG LIMITS, ASTM D4318	Hg Intrusion Capillarity			COMMENTS
ML-3 106.5-107	1/7/14	1600	106.5-107	1		X																X			
ML-3 166.5-167	1/8/14	1360	166.5-167	1		X																X			
ML-4 76.5-77	11/26/13	1320	76.5-77	1		X																X			
ML-4 126.5-127	12/2/13	1350	126.5-127	1		X																X			
ML-4 146.5-147	12/2/13	1745	146.5-147	1		X																X			

76 °F

1. RELINQUISHED BY	2. RECEIVED BY	3. RELINQUISHED BY	4. RECEIVED BY
Nathan Reynolds			
COMPANY: GEOSCIENCE	COMPANY: [illegible]	COMPANY: GEOSCIENCE	COMPANY: PTS LABS
DATE: 2-3-14 TIME: 17:00	DATE: [illegible] TIME: [illegible]	DATE: 2-4-14 TIME: 10:26	DATE: 2/4/14 TIME: 10:26

PTS Laboratories, Inc. • 8100 Secura Way • Santa Fe Springs, CA 90670 • Phone (562) 347-2500 • Fax (562) 907-3510

PTS Laboratories, Inc.

CHAIN OF CUSTODY RECORD

PAGE Appendix OF

COMPANY	Geoscience Support Services
ADDRESS	PO 220
CITY	Claremont, CA
ZIP CODE	91711
PROJECT MANAGER	Brian Villalobos bvillalobos@geoscience-water.com
PROJECT NAME	MPWSP
PHONE NUMBER	909-451-6650
PROJECT NUMBER	13017-13
FAX NUMBER	909-451-6638
SITE LOCATION	MBARI, Moss Landing
SAMPLER SIGNATURE	

ANALYSIS REQUEST

PO# 13017-13

TURNAROUND TIME: 24 HOURS ☐ 48 HOURS ☐ 72 HOURS ☐ 5 DAYS NORMAL ☒ OTHER: _____

SAMPLE INTEGRITY (CHECK): INTACT X ON ICE ____

PTS QUOTE NO.

PTS FILE: 44073

SAMPLE ID NUMBER	DATE	TIME	DEPTH, FT	NUMBER OF SAMPLES	SOIL PROPERTIES PACKAGE	HYDRAULIC CONDUCTIVITY PACKAGE	PORE FLUID SATURATIONS PACKAGE	TOPOGENOUS PROPERTIES PACKAGE	CAPILLARITY PACKAGE	FLUID PROPERTIES PACKAGE	PHOTOLOG, CORE PHOTOGRAPHY	MOISTURE CONTENT, ASTM D2216	POROSITY, TOTAL, API RP40	POROSITY: EFFECTIVE, ASTM D425M	SPECIFIC GRAVITY, ASTM D854	BULK DENSITY (DRY), API RP40 or ASTM D2937	AIR PERMEABILITY, API RP40	HYDRAULIC CONDUCTIVITY, LPA100, API RP40, D5084	GRAIN SIZE DISTRIBUTION, ASTM D422/4464M	TOC: WALKLEY-BLACK	ATTERBERG LIMITS, ASTM D4318	Horizontal Conductivity				COMMENTS
ML-6 79.5-80	11/19/13	1310	79.5-80			X																X				
ML-6 107.5-108	11/19/13	1320	107.5-108			X																X				
ML-6 167-168.5	11/20/13	0935	167-168.5			X																X				

76°F

1. RELINQUISHED BY	2. RECEIVED BY	3. RELINQUISHED BY	4. RECEIVED BY
Nathan Reynolds / [signature]	[signature]	[signature]	[signature]
COMPANY: GEOSCIENCE	COMPANY: Geoscience	COMPANY: Geoscience	COMPANY: PTS LABS
DATE: 2-3-14 TIME: 17:00	DATE: 2-3-14 TIME: 17:00	DATE: 2-4-14 TIME: 10:26	DATE: 2/4/14 TIME: 10:26

PTS Laboratories, Inc. • 8100 Secura Way • Santa Fe Springs, CA 90670 • Phone (562) 347-2500 • Fax (562) 907-3610

APPENDIX D

Mechanical Grading Analyses – Formation Materials

GEOSCIENCE

APPENDIX D:

MECHANICAL GRADING ANALYSES – FORMATION MATERIALS

CONTENTS

Description **Page**

Borehole CX-B1 ..... *D-1*

Borehole CX-B2 ..... *D-2*

Borehole CX-B3 ..... *D-3*

Borehole CX-B4 ..... *D-4*

Borehole MDW-1 ..... *D-5*

Borehole ML-1 ..... *D-6*

Borehole ML-2 ..... *D-7*

Borehole ML-3 ..... *D-8*

Borehole ML-4 ..... *D-9*

Borehole ML-6 ..... *D-10*

Borehole PR-1 ..... *D-11*

DRAFT

Mechanical Grading Analysis
RBF-MPWSP CX-B1

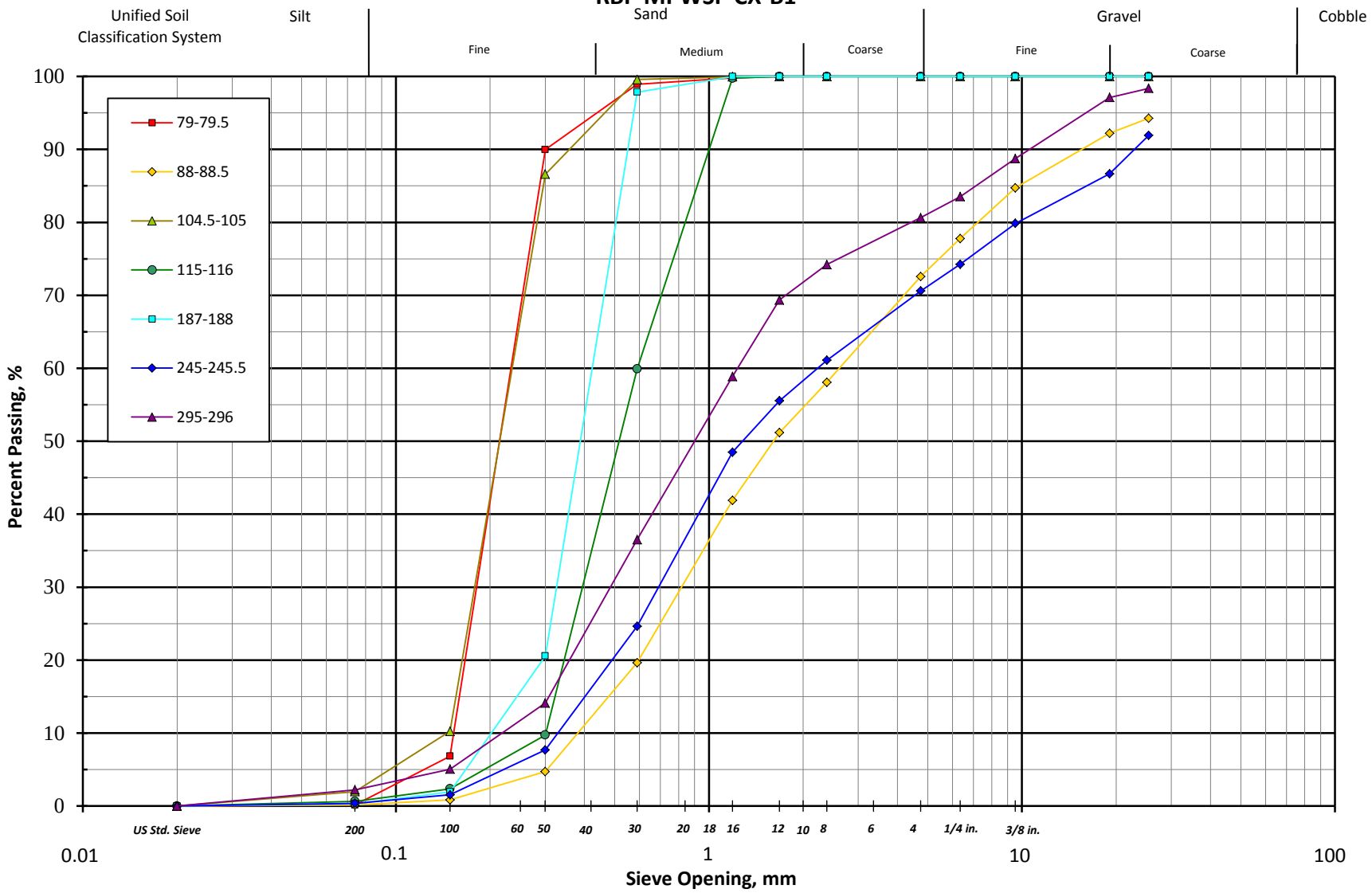

Appendix D

DRAFT

Mechanical Grading Analysis
RBF-MPWSP CX-B2

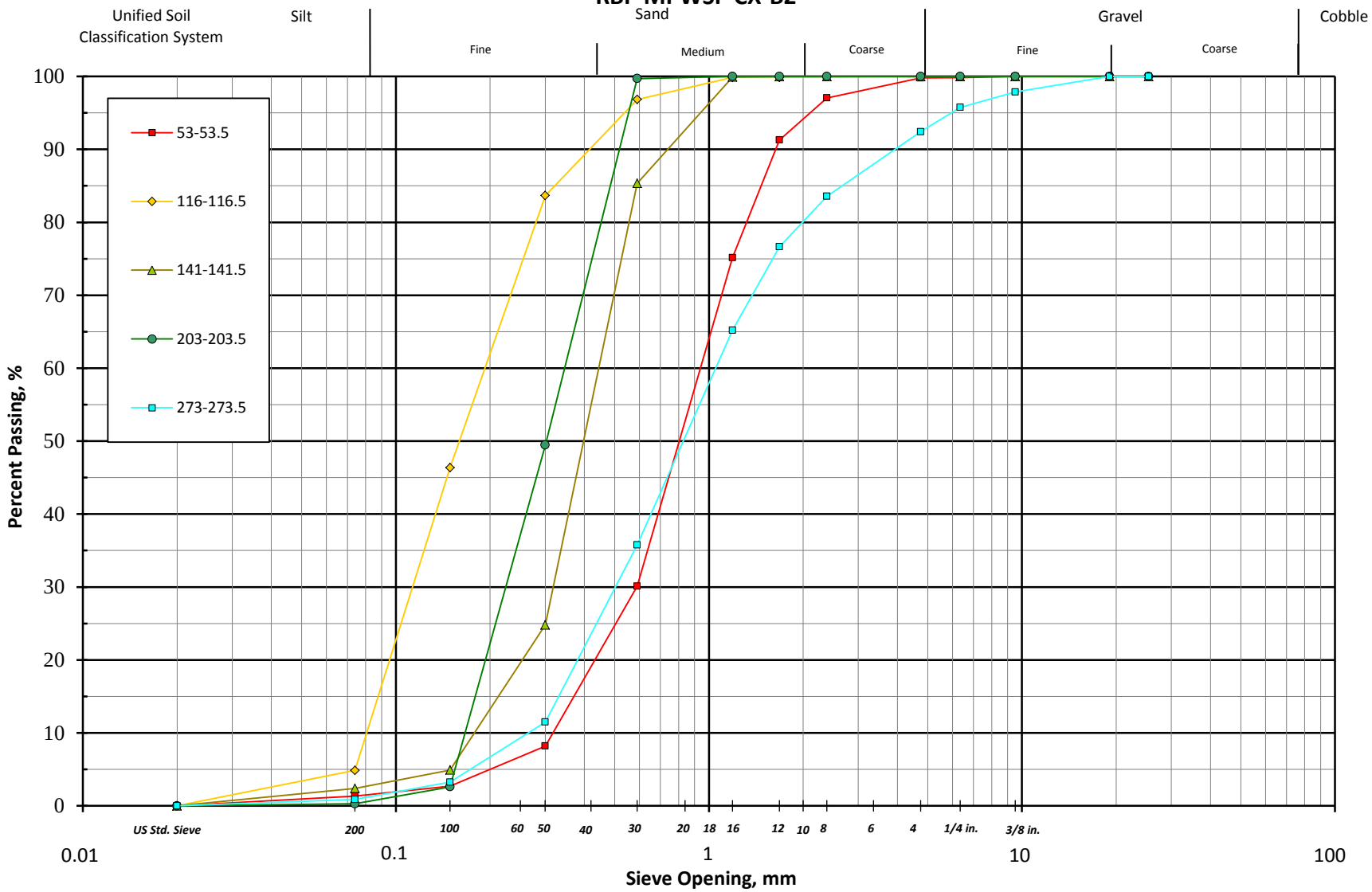

Appendix D

DRAFT

Mechanical Grading Analysis
RBF-MPWSP CX-B3

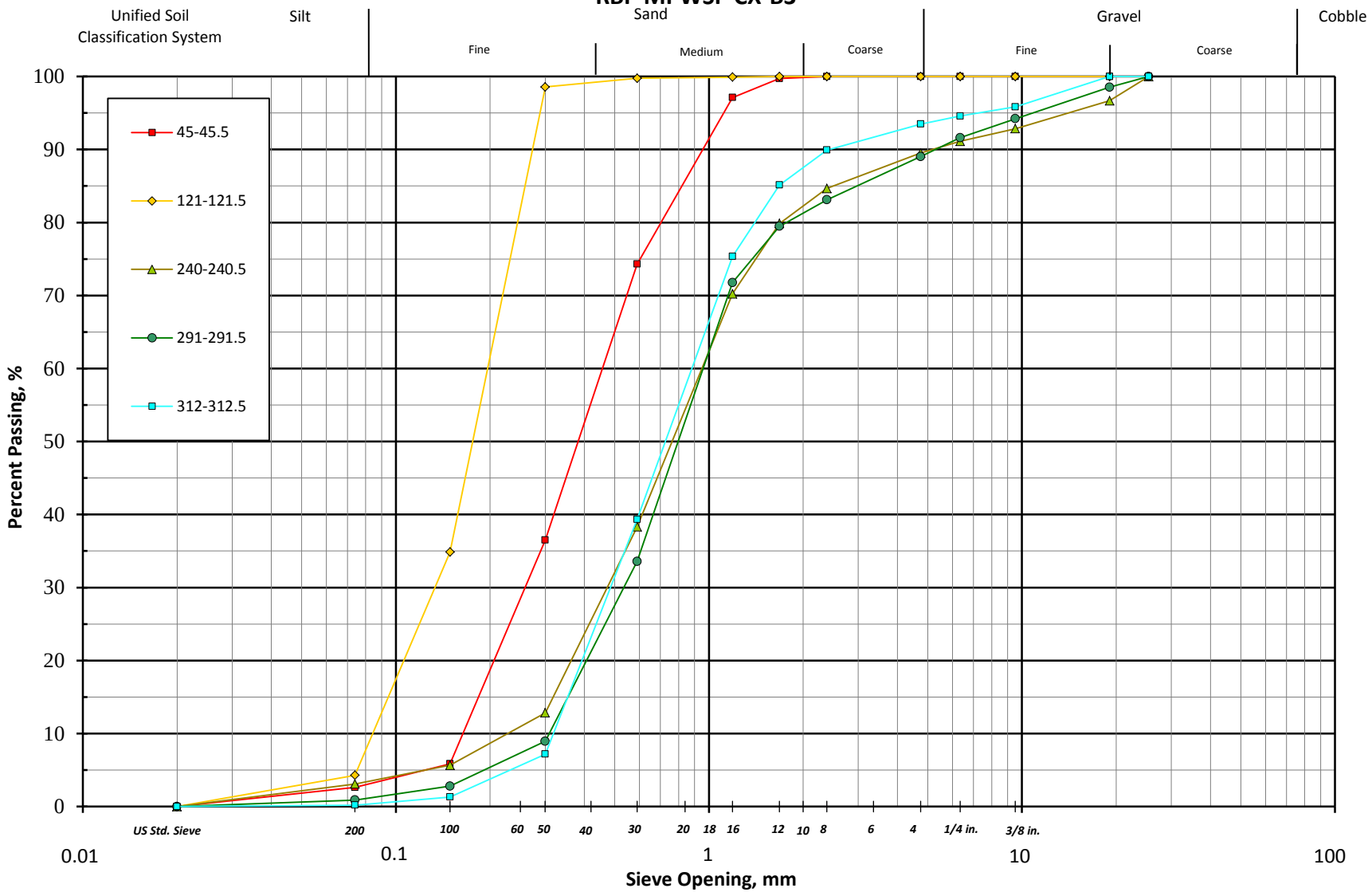

Appendix D

DRAFT

Mechanical Grading Analysis
RBF-MPWSP CX-B4

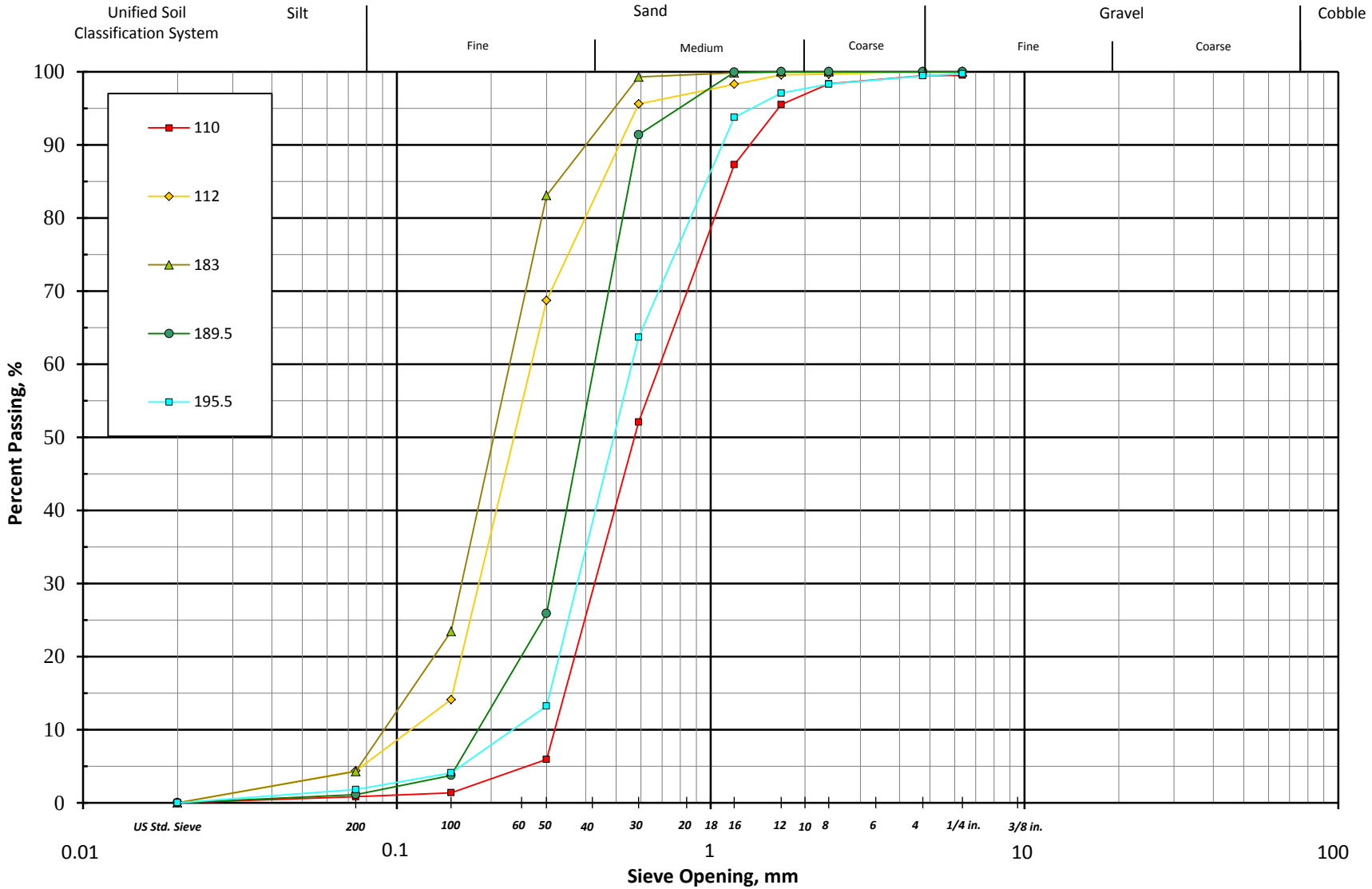

Appendix D

DRAFT

Mechanical Grading Analysis
RBF-MPWSP MDW-1

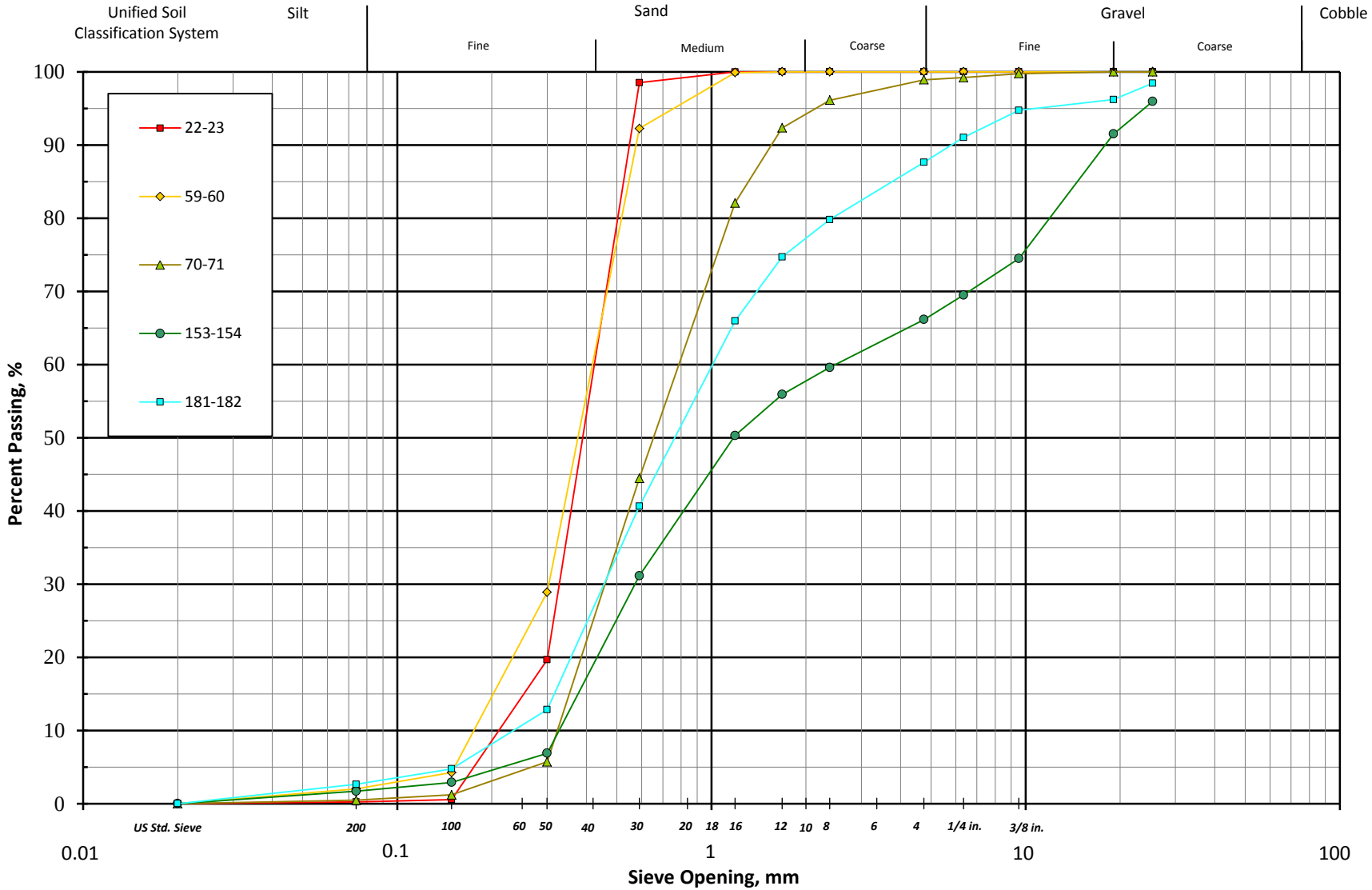

Appendix D

DRAFT

Mechanical Grading Analysis
RBF-MPWSP ML-1

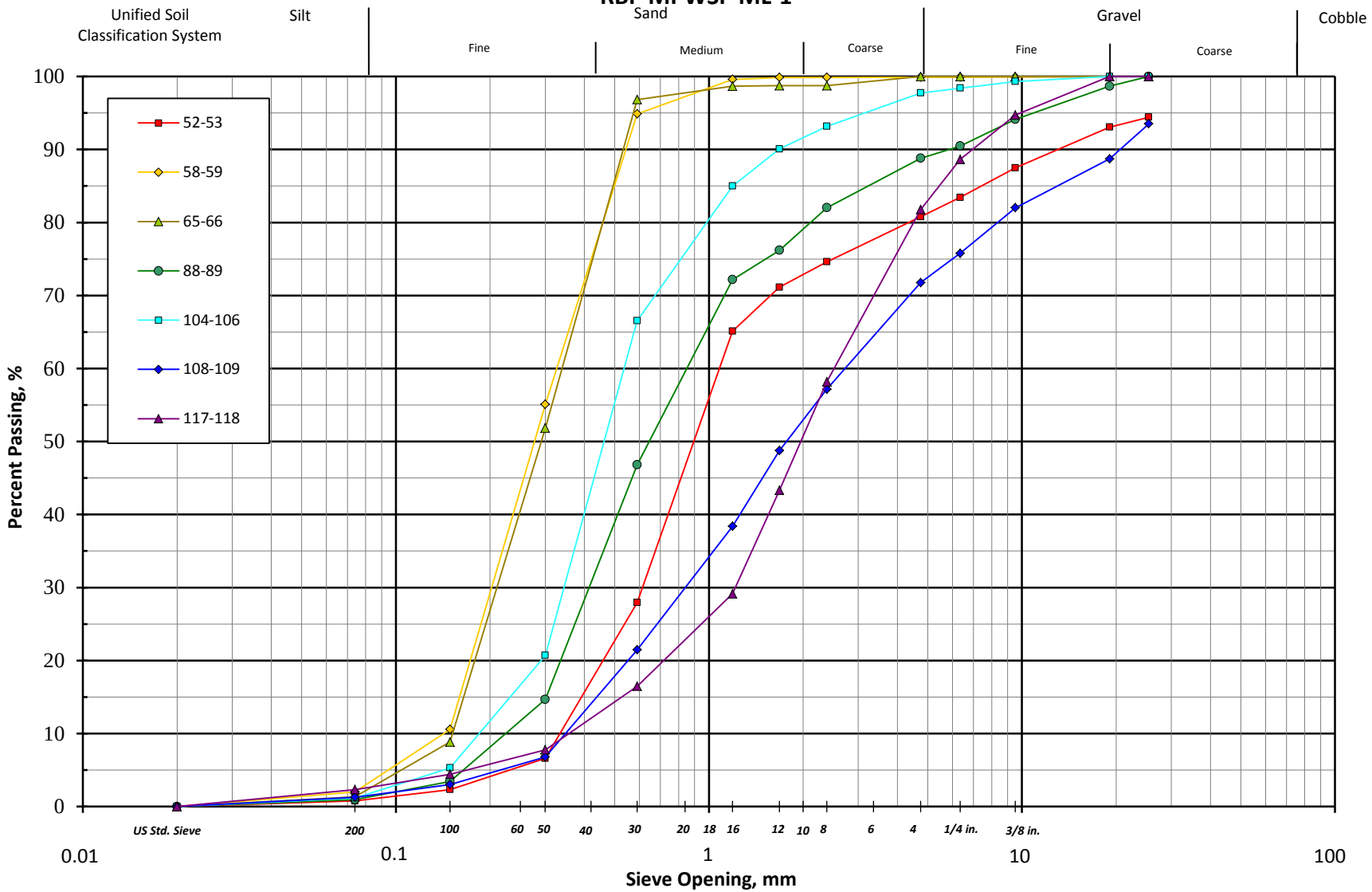

Appendix D

DRAFT

Mechanical Grading Analysis
RBF-MPWSP ML-2

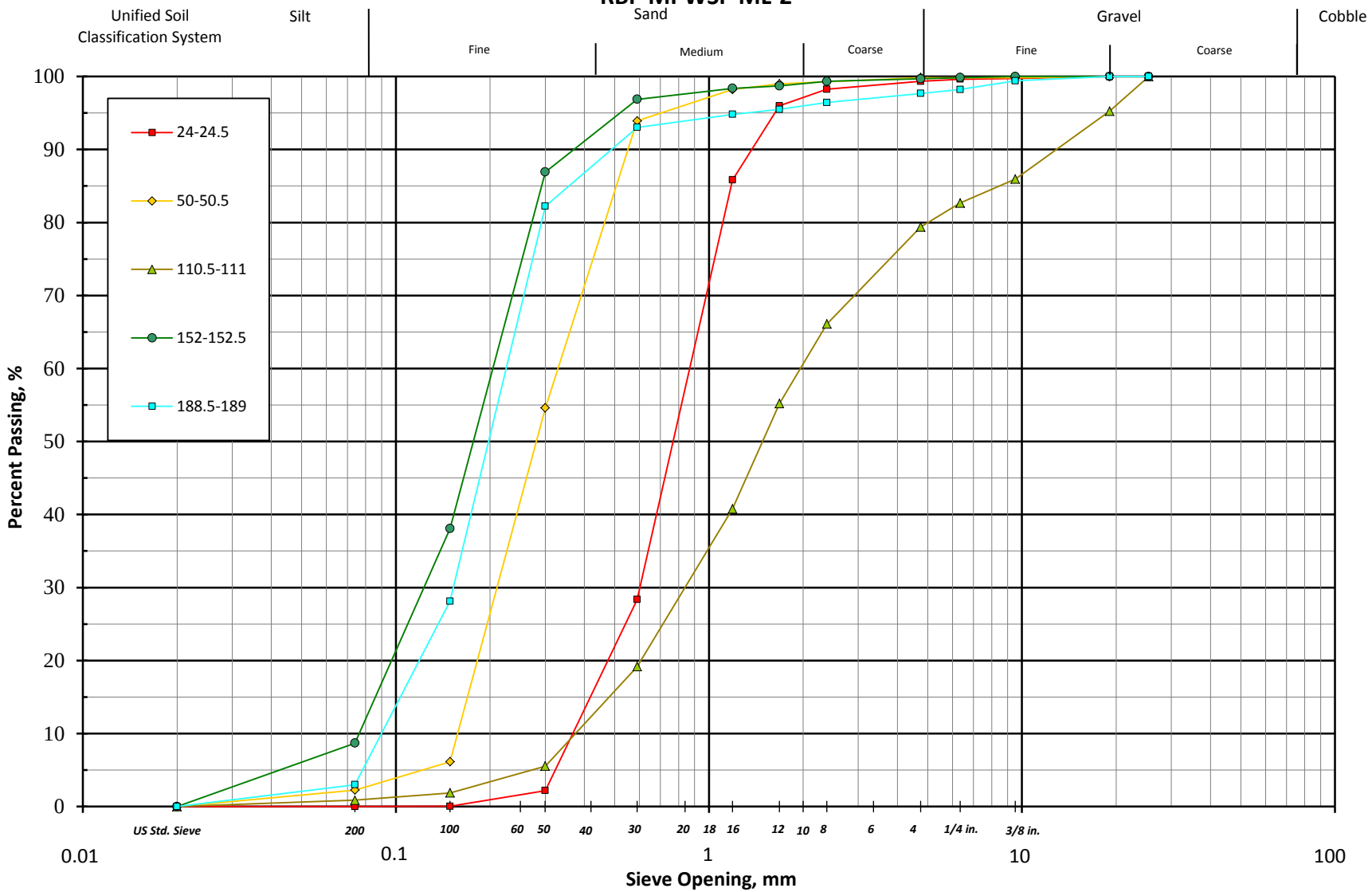

Appendix D

DRAFT

Mechanical Grading Analysis
RBF-MPWSP ML-3

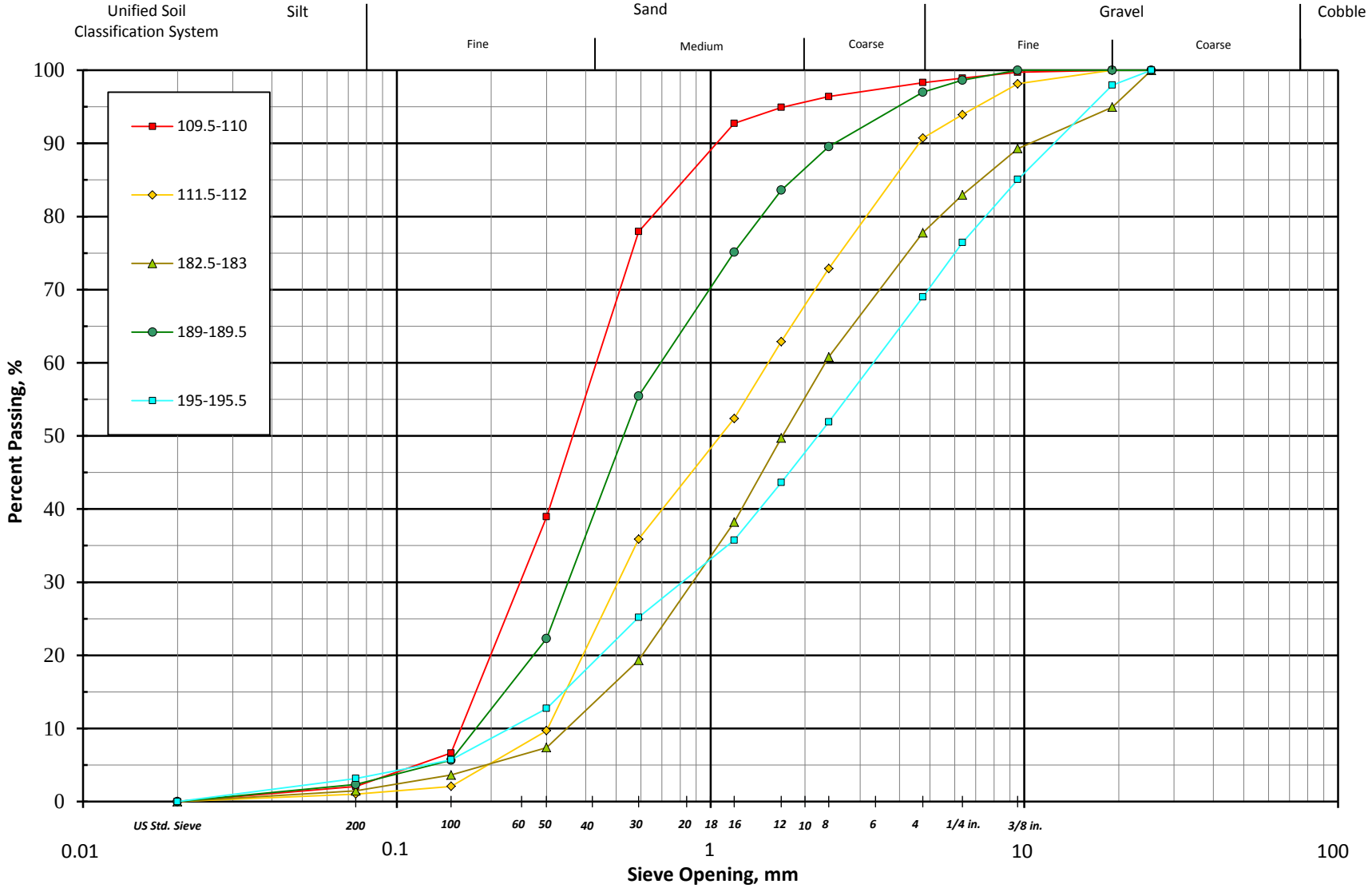

Appendix D

DRAFT

Mechanical Grading Analysis
RBF-MPWSP ML-4

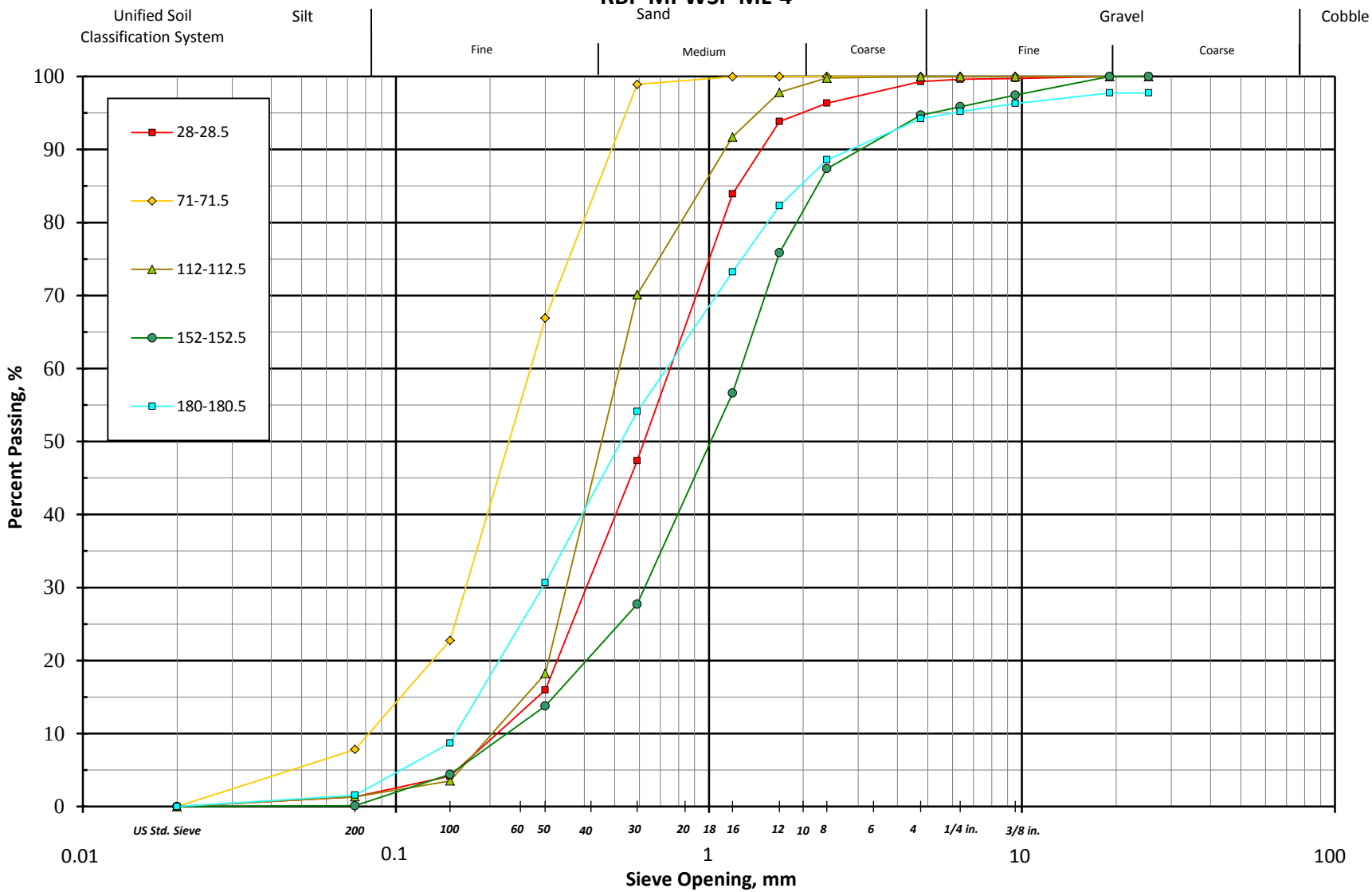

Appendix D

DRAFT

Mechanical Grading Analysis
RBF-MPWSP ML-6

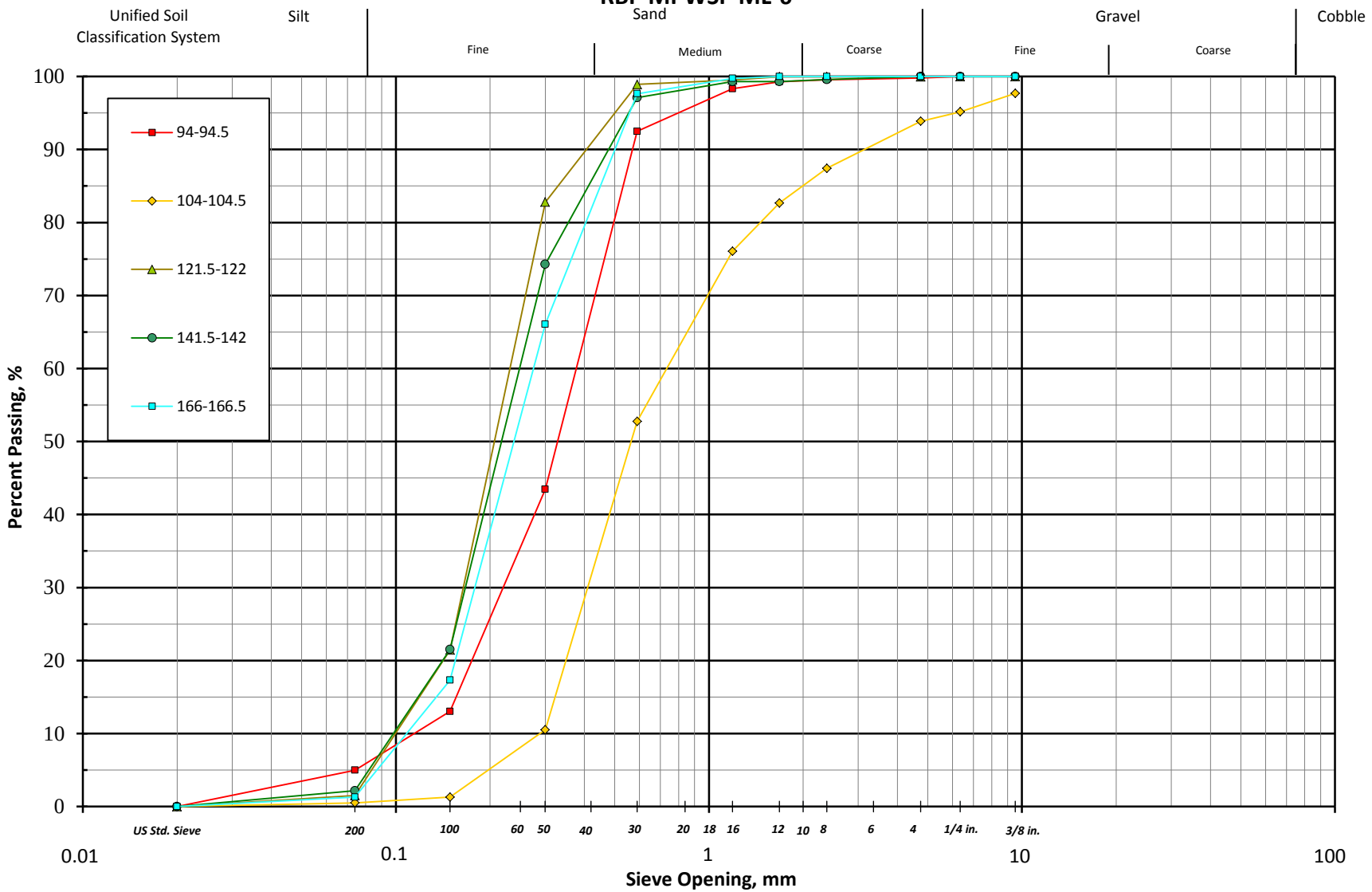

Appendix D

DRAFT

Mechanical Grading Analysis
RBF-MPWSP PR-1

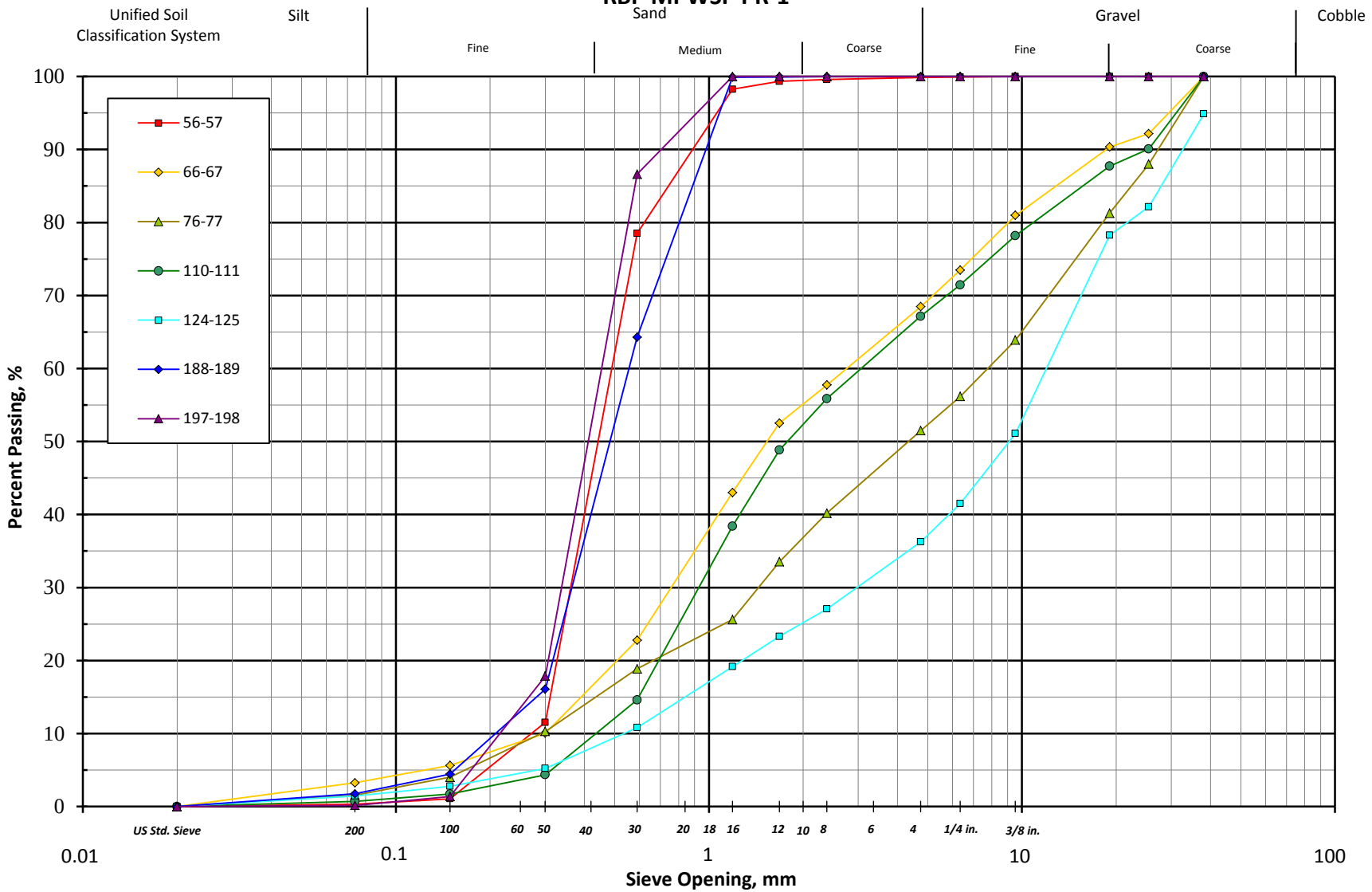

Appendix D

APPENDIX E

Geophysical Borehole Logs

GEOSCIENCE

APPENDIX E:

GEOPHYSICAL BOREHOLE LOGS

CONTENTS

Description **Page**

Borehole CX-B1 ..... *E-1*

Borehole CX-B2 ..... *E-6*

Borehole CX-B3 ..... *E-11*

Borehole CX-B4 ..... *E-17*

Borehole MDW-1 ..... *E-22*

Borehole ML-1 ..... *E-27*

Borehole ML-2 ..... *E-31*

Borehole ML-3 ..... *E-35*

Borehole ML-4 ..... *E-39*

Borehole ML-6 ..... *E-42*

Borehole PR-1 ..... *E-46*

PACIFIC SURVEYS

DUAL INDUCTION GAMMA-RAY

Job No. 17725

File No.

Company CASCADE DRILLING, INC.

Well CX-B1

Field MARINA

County MONTEREY State CA

Location

OFF OF LAPIS RD.
GPS: N 36o 42.797' W 121o 48.360'

Other Services:

TEMPERATURE
FLUID RESISTIVITY

Permanent Datum	G.L.	Elevation above perm. datum	Elevation K.B.
Log Measured From	G.L. 0'		D.F.
Drilling Measured From	G.L.		G.L.

Date	10-26-2013	
Run Number	ONE	
Depth Driller	305'	
Depth Logger	304'	
Bottom Logged Interval	304'	
Top Log Interval	0'	
Open Hole Size	9" (0'-100')	8" (100'-306')
Type Fluid	N/A	
Density / Viscosity	N/A	
Fluid Level	N/A	
Bentonite Seal	N/A	
Time Well Ready	1330	
Time Logger on Bottom	1400	
Equipment Number	PS-3	
Location	LA	
Recorded By	SCHUMACHER	
Witnessed By	B. VILLALOBOS	

Borehole Record				Tubing Record			
Run Number	Bit	From	To	Size	Weight	From	To
ONE	9"	0'	100'				
TWO	8"	100'	306'				

Casing Record	Size	Wgt/Ft	Top	Bottom
Surface String	9"	N/A	0'	3.5'
Prot. String	4" PVC	N/A	0'	305'
Production String				
Liner				

<<< Fold Here >>>

All interpretations are opinions based on inferences from electrical or other measurements and Pacific Surveys cannot and do not guarantee the accuracy or correctness of any interpretation, and we shall not, except in the case of gross or willful negligence on our part, be liable or responsible for any loss, costs, damages, or expenses incurred or sustained by anyone resulting from any interpretation made by any of our officers, agents or employees. These interpretations are also subject to Pacific Surveys' general terms and conditions set out in our current Price Schedule.

Comments

0.010" SLOT FROM 5'-305' BGS

Calibration Report

Database File 17725.db
Dataset Pathname DIL
Dataset Creation Sat Oct 26 14:46:45 2013

Dual Induction Calibration Report

Serial-Model:	0001-ALT	
Surface Cal Performed:	Wed Aug 31 18:21:15 2011	**Appendix E**

	Readings			References			Results	
Loop:	Air	Loop		Air	Loop		m	b
Deep	1407.490	3493.640	cps	0.000	612.000	mmho/m	0.293	-412.905
Medium	1908.120	14487.900	cps	0.000	1960.000	mmho/m	0.156	-297.296

Gamma Ray Calibration Report

Serial Number:	PS_1	
Tool Model:	01	
Performed:	Wed Aug 31 18:22:13 2011	
Calibrator Value:	162.0	GAPI
Background Reading:	46.1	cps
Calibrator Reading:	180.8	cps
Sensitivity:	1.2020	GAPI/cps

Database File	17725.db
Dataset Pathname	DIL
Presentation Format	dil_ps
Dataset Creation	Sat Oct 26 14:46:45 2013
Charted by	Depth in Feet scaled 1:120

10	SP (mV)	160	0	RILM (Ohm-m)	5	1500	CILM (mmho/m)	0
10	Gamma Ray (GAPI)	110	0	RILD (Ohm-m)	5	1500	CILD (mmho/m)	0
			5	RILM backup (Ohm-m)	10	15000	CILM backup (mmho/m)	1500
			5	RILD backup (Ohm-m)	10	15000	CILD backup (mmho/m)	1500

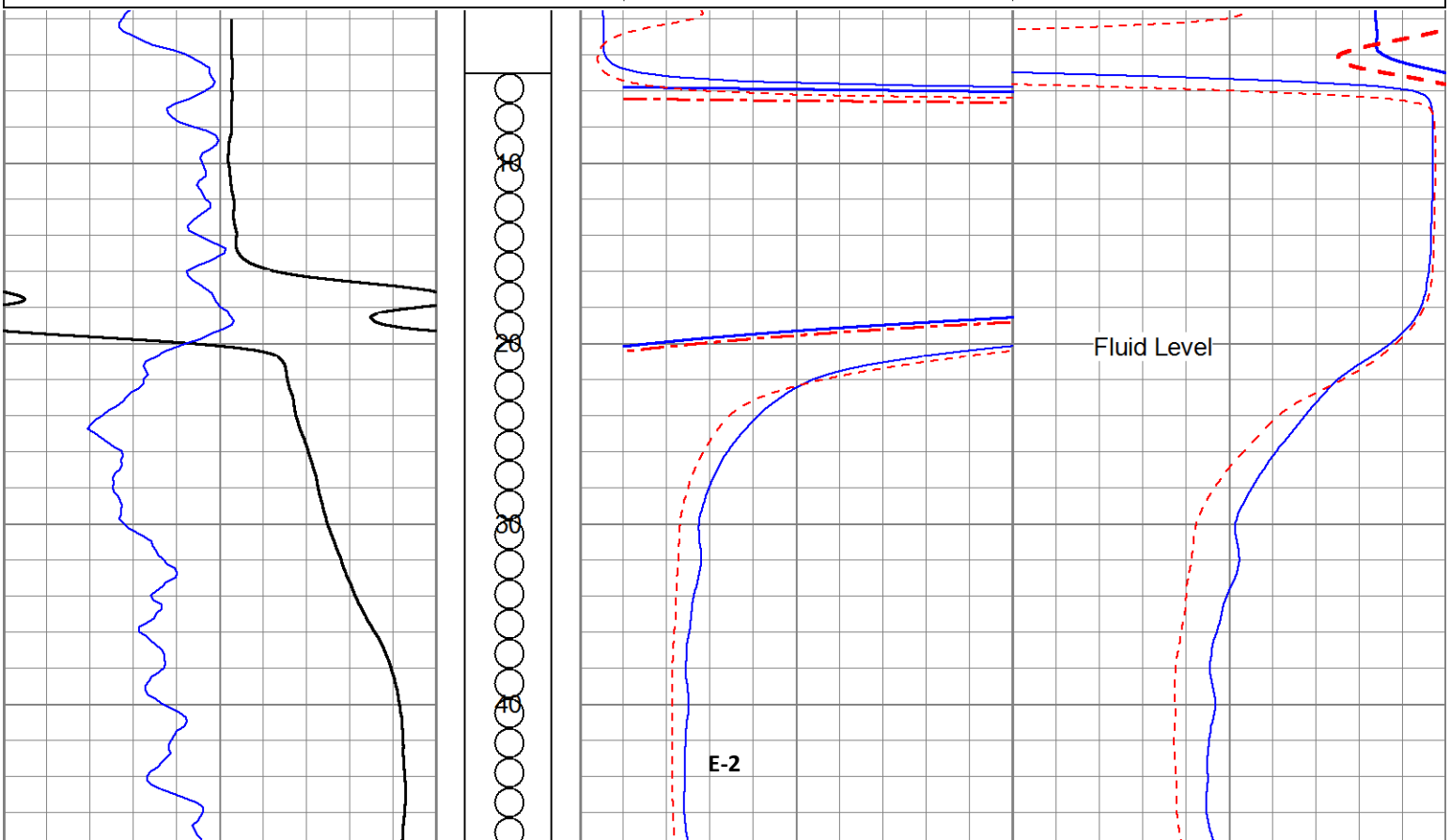

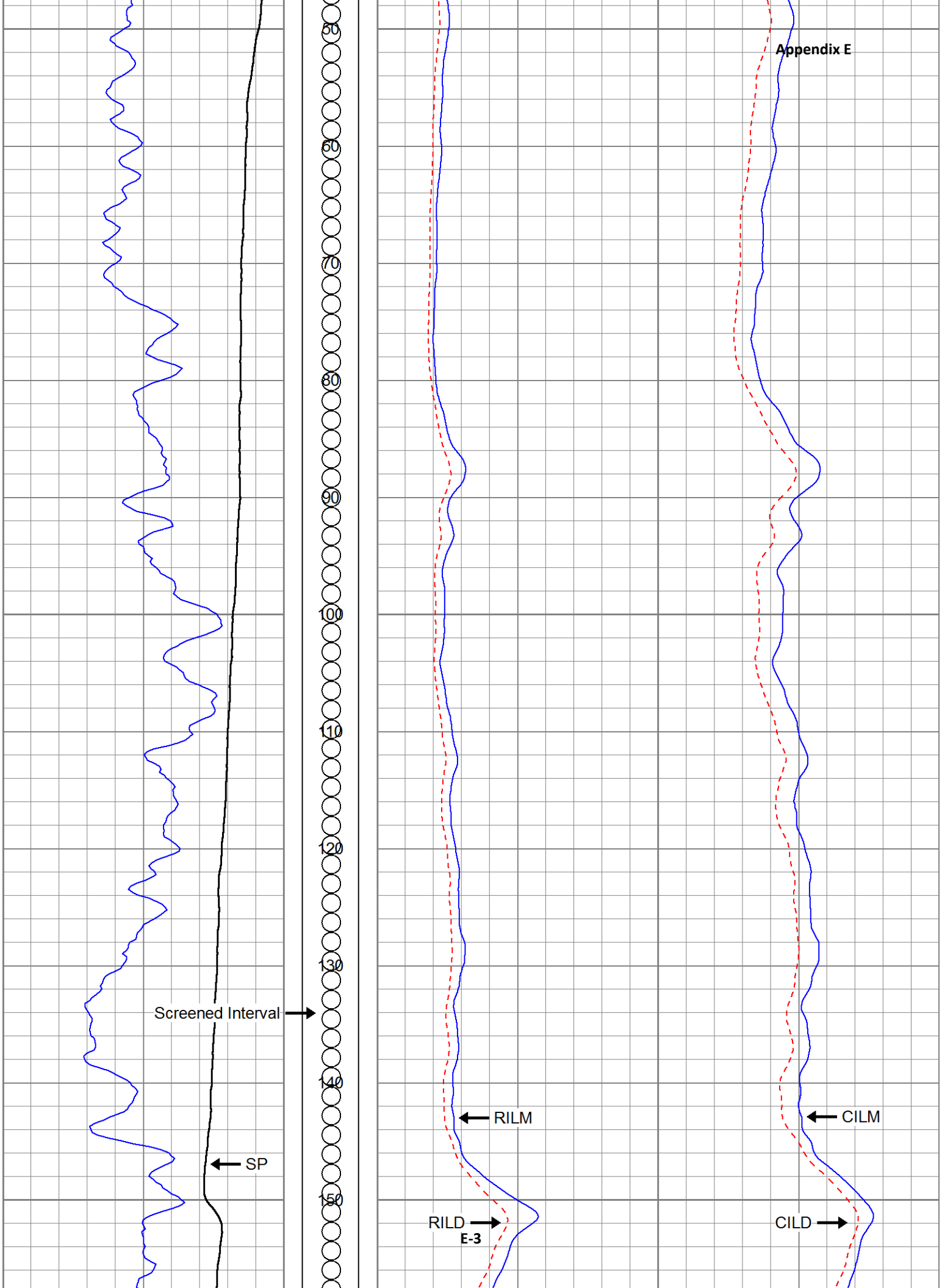
50
60
70
80
90
100
110
120
130
140
150
Screened Interval
SP
RILM
RILD
CILM
CILD

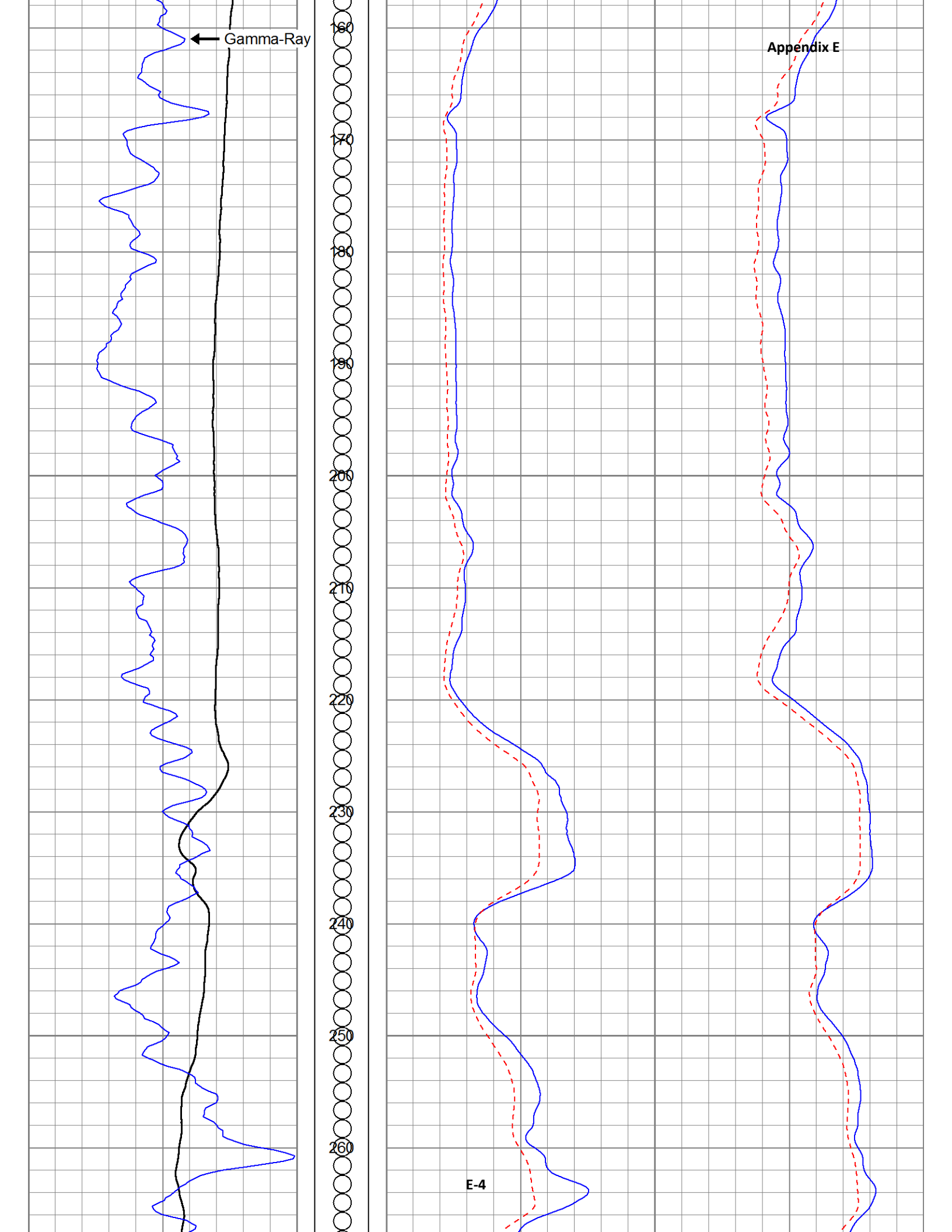
Gamma-Ray
160
170
180
190
200
210
220
230
240
250
260

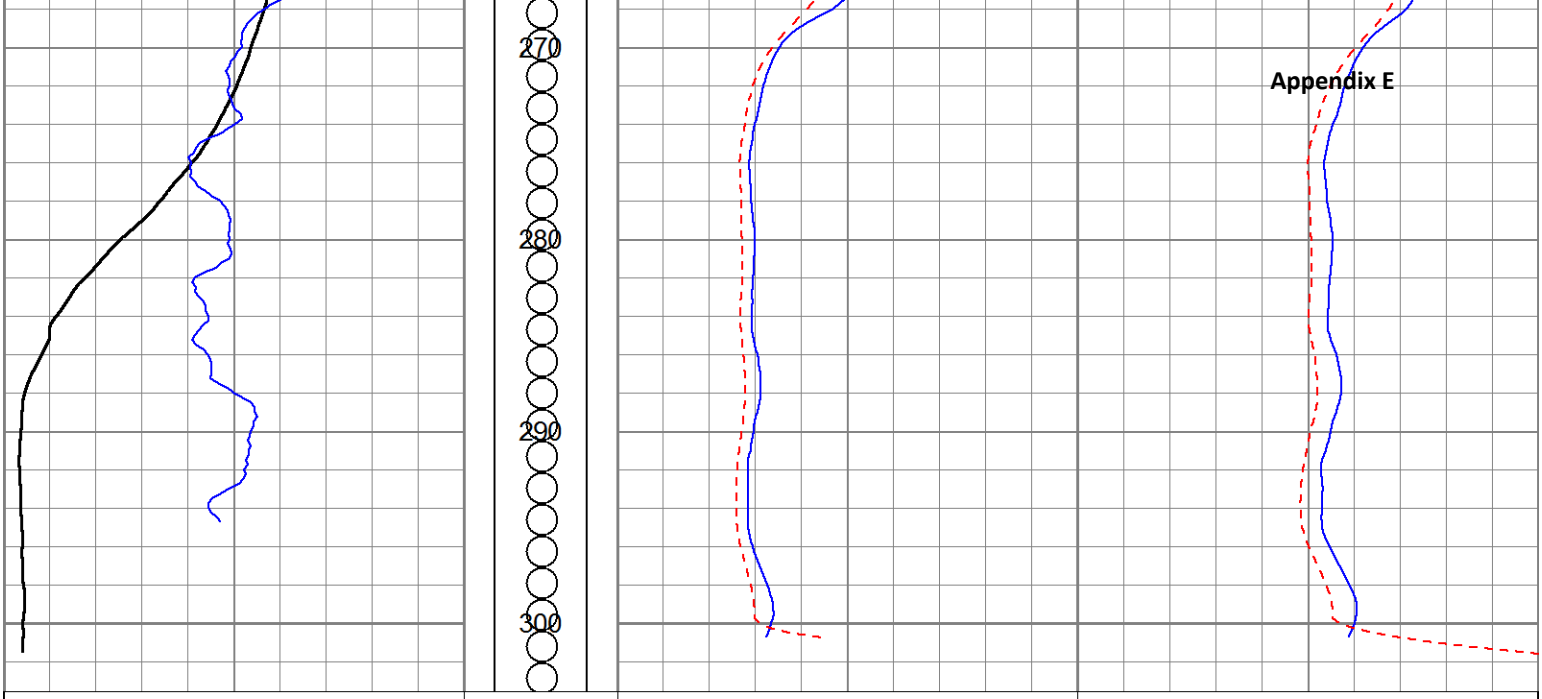

10 SP (mV) 160	0 RILM (Ohm-m) 5	1500 CILM (mmho/m) 0
10 Gamma Ray (GAPI) 110	0 RILD (Ohm-m) 5	1500 CILD (mmho/m) 0
	5 RILM backup (Ohm-m) 10	15000 CILM backup (mmho/m) 1500
	5 RILD backup (Ohm-m) 10	15000 CILD backup (mmho/m) 1500

PACIFIC SURVEYS

DUAL INDUCTION GAMMA RAY

Job No. 17805

File No.

Company CASCADE DRILLING INC.

Well CX-B2

Field MARINA

County MONTEREY State CA

Location

OFF OF LAPIS RD.
GPS: N36o42.768' W121o48.226'

Other Services:

TEMPERATURE
FLUID RESISTIVITY

Permanent Datum	G.L.	Elevation above perm. datum	Elevation K.B.
Log Measured From	G.L. 0'		D.F.
Drilling Measured From	G.L.		G.L.

Date	11-07-2013	
Run Number	ONE	
Depth Driller	305.5'	
Depth Logger	301.5'	
Bottom Logged Interval	300'	
Top Log Interval	0'	
Open Hole Size	7" (0'-30')	6.5" (30'-307')
Type Fluid	WATER	
Density / Viscosity	N/A	
Fluid Level	27'	
Bentonite Seal	N/A	
Time Well Ready	11:00 AM	
Time Logger on Bottom	11:30 AM	
Equipment Number	PS-5	
Location	L.A.	
Recorded By	ABREAU	
Witnessed By	N. REYNOLDS	

Borehole Record				Tubing Record			
Run Number	Bit	From	To	Size	Weight	From	To
ONE	7"	0'	30'				
TWO	6.5"	30'	307'				

Casing Record	Size	Wgt/Ft	Top	Bottom
Surface String	7.25"	N/A	0'	30'
Prot. String				
Production String	4" PVC	SCH 40	0'	305.5'
Liner				

<<< Fold Here >>>

All interpretations are opinions based on inferences from electrical or other measurements and Pacific Surveys cannot and do not guarantee the accuracy or correctness of any interpretation, and we shall not, except in the case of gross or willful negligence on our part, be liable or responsible for any loss, costs, damages, or expenses incurred or sustained by anyone resulting from any interpretation made by any of our officers, agents or employees. These interpretations are also subject to Pacific Surveys' general terms and conditions set out in our current Price Schedule.

Comments

Calibration Report

Database File 17805.db
Dataset Pathname DIL
Dataset Creation Thu Nov 07 12:02:28 2013

Dual Induction Calibration Report

Serial-Model:	0001-ALT	
Surface Cal Performed:	Tue Feb 19 09:35:46 2013	**Appendix E**

Loop:	Readings Air	Readings Loop		References Air	References Loop		Results m	Results b
Deep	1421.120	3677.430	cps	0.000	612.000	mmho/m	0.271	-385.466
Medium	2115.060	14165.800	cps	0.000	1960.000	mmho/m	0.163	-344.005

Gamma Ray Calibration Report

Serial Number:	PS_1	
Tool Model:	01	
Performed:	Tue Feb 19 09:35:55 2013	
Calibrator Value:	162.0	GAPI
Background Reading:	46.1	cps
Calibrator Reading:	180.8	cps
Sensitivity:	1.2020	GAPI/cps

Database File	17805.db
Dataset Pathname	DIL
Presentation Format	dil_ps
Dataset Creation	Thu Nov 07 12:02:28 2013
Charted by	Depth in Feet scaled 1:120

-150	SP (mV)	-50	0	RILM (Ohm-m)	5	1500	CILM (mmho/m)	0
10	Gamma Ray (GAPI)	110	0	RILD (Ohm-m)	5	1500	CILD (mmho/m)	0
0	Line Speed (ft/min)	-100	5	RILM backup (Ohm-m)	10	15000	CILM backup (mmho/m)	1500
			5	RILD backup (Ohm-m)	10	15000	CILD backup (mmho/m)	1500

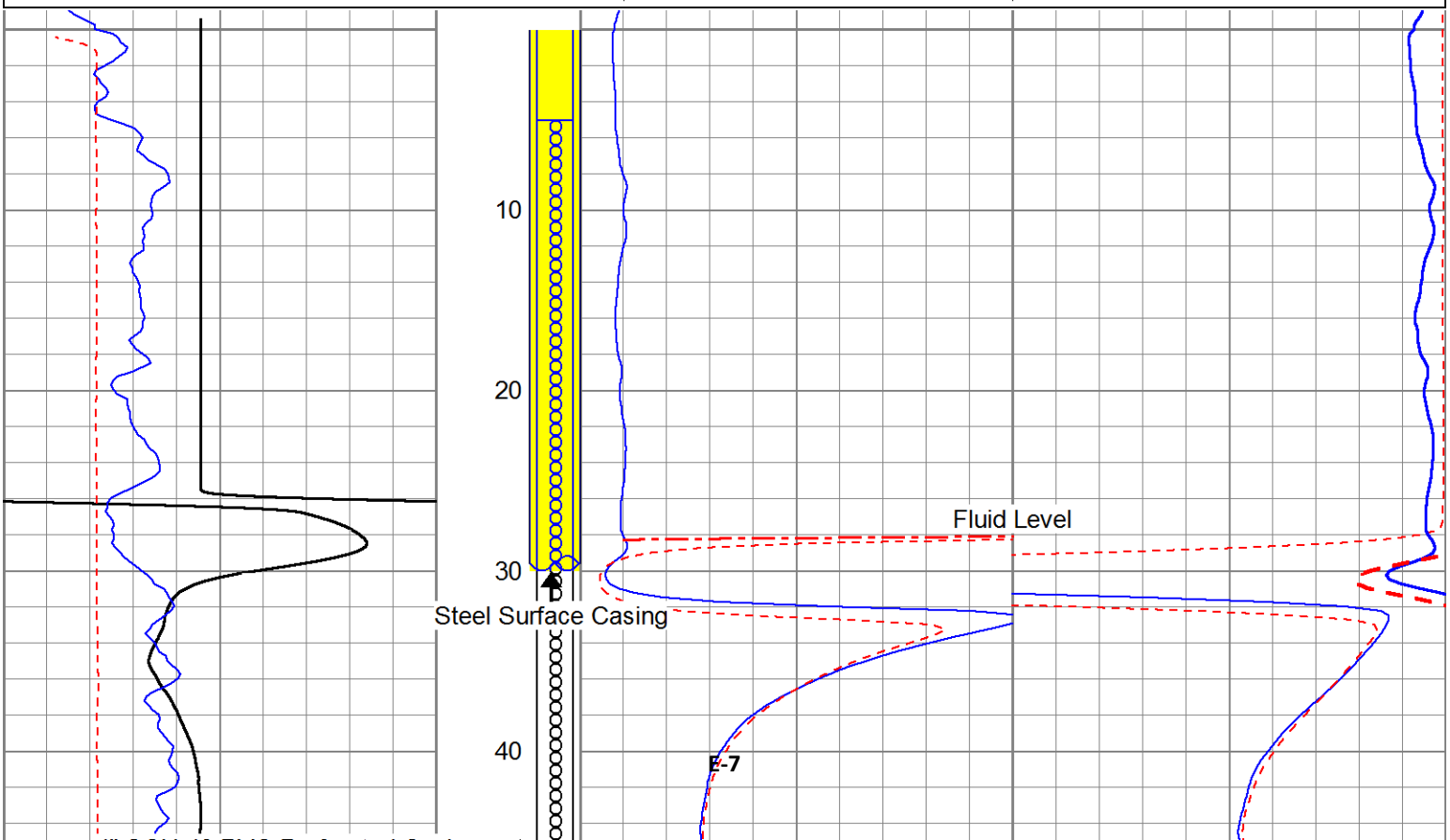

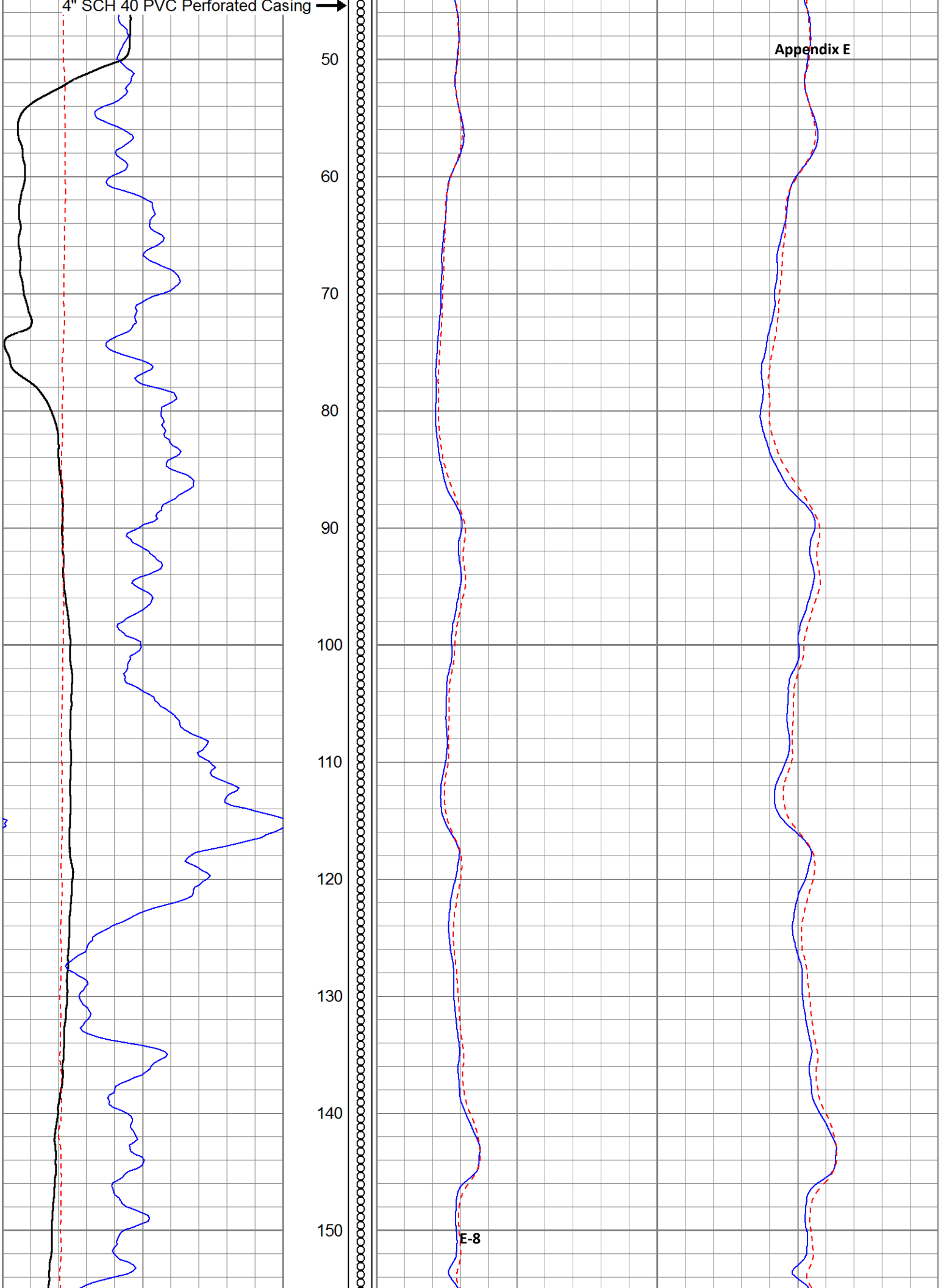
4" SCH 40 PVC Perforated Casing
50
60
70
80
90
100
110
120
130
140
150

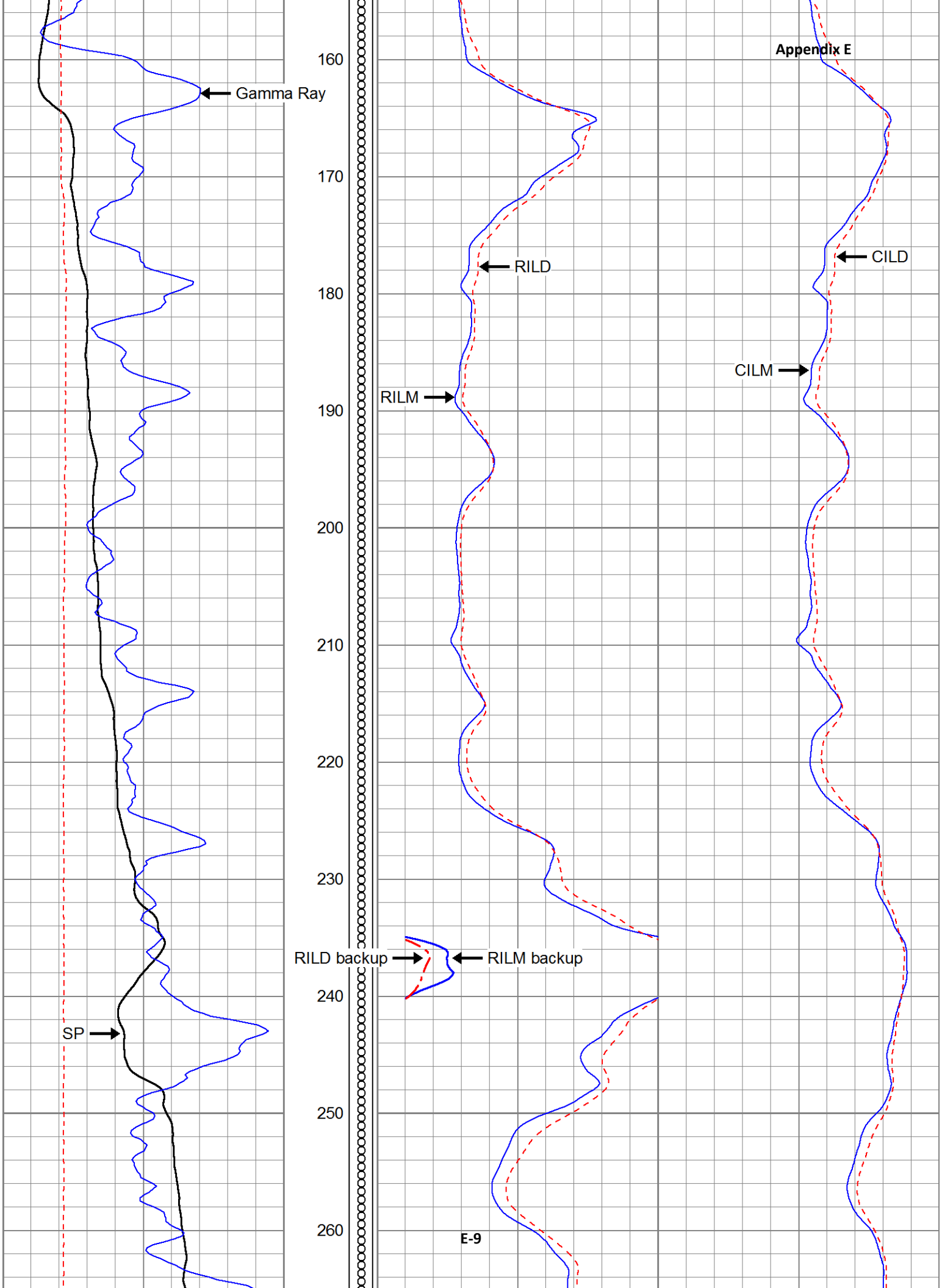
Gamma Ray
160
170
180
190
200
210
220
230
240
250
260
RILD
RILM
RILD backup
RILM backup
SP
CILD
CILM

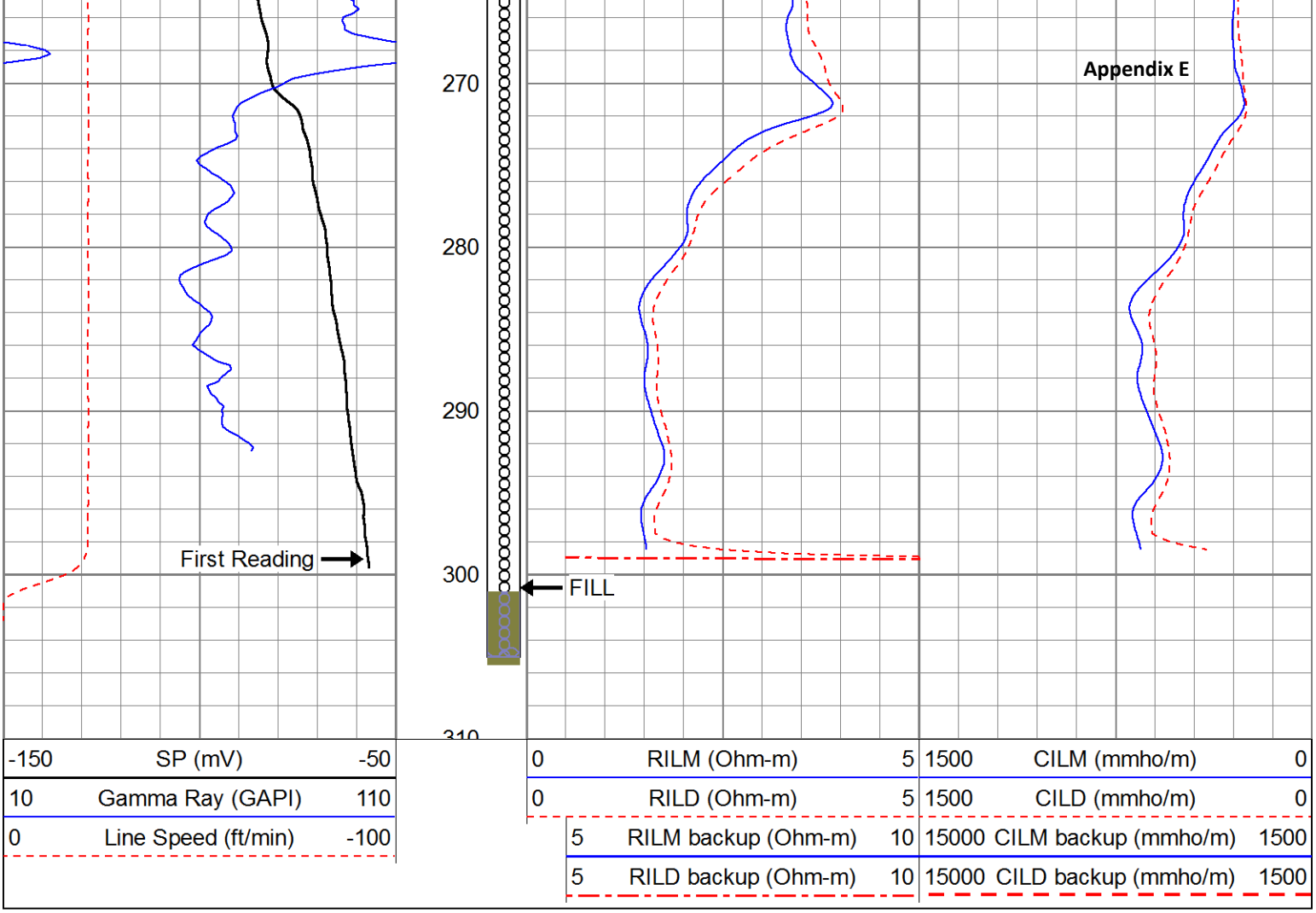
270
280
290
300
First Reading
FILL
-150 SP (mV) -50
10 Gamma Ray (GAPI) 110
0 Line Speed (ft/min) -100
0 RILM (Ohm-m) 5
0 RILD (Ohm-m) 5
5 RILM backup (Ohm-m) 10
5 RILD backup (Ohm-m) 10
1500 CILM (mmho/m) 0
1500 CILD (mmho/m) 0
15000 CILM backup (mmho/m) 1500
15000 CILD backup (mmho/m) 1500

PACIFIC SURVEYS

TEMPERATURE
DELTA TEMPERATURE
FLUID RESISTIVITY
DELTA FLUID RESISTIVITY

Job No. 17821

File No.

Company CASCADE DRILLING INC.

Well CX-B3

Field MARINA

County MONTEREY State CA

Location

OFF OF LAPIS RD.
GPS: N36o42.721' W121o47.985'

Other Services:

DUAL INDUCTION
GAMMA RAY

			Elevation	Elevation
Permanent Datum	G.L.			
Log Measured From	G.L.	0'	above perm. datum	K.B.
Drilling Measured From	G.L.			D.F.
				G.L.

Date	11-12-2013		
Run Number	ONE		
Depth Driller	348.5'		
Depth Logger	346.5'		
Bottom Logged Interval	346'		
Top Log Interval	0'		
Open Hole Size	7" (0-30')	6.5" (30'-348.5')	
Type Fluid	WATER		
Density / Viscosity	N/A		
Fluid Level	26'		
Bentonite Seal	N/A		
Time Well Ready	10:00 AM		
Time Logger on Bottom	10:10 AM		
Equipment Number	PS-5		
Location	L.A.		
Recorded By	ABREAU		
Witnessed By	N. REYNOLDS		

Borehole Record				Tubing Record			
Run Number	Bit	From	To	Size	Weight	From	To
ONE	7"	0'	30'				
TWO	6.5"	30'	348.5'				

Casing Record	Size	Wgt/Ft	Top	Bottom
Surface String	7.25"	N/A	0'	30'
Prot. String				
Production String	4" PVC	SCH 40	0'	348.5'
Liner				

<<< Fold Here >>>

All interpretations are opinions based on inferences from electrical or other measurements and Pacific Surveys cannot and do not guarantee the accuracy or correctness of any interpretation, and we shall not, except in the case of gross or willful negligence on our part, be liable or responsible for any loss, costs, damages, or expenses incurred or sustained by anyone resulting from any interpretation made by any of our officers, agents or employees. These interpretations are also subject to Pacific Surveys' general terms and conditions set out in our current Price Schedule.

Comments

Calibration Report

Database File 17821.db
Dataset Pathname tmp
Dataset Creation Tue Nov 12 10:04:04 2013

Temperature Calibration Report

Serial Number:	5269A	
Tool Model:	MLS	
Performed:	Fri Nov 30 10:30:16 2012	
	Reference	Reading
Low Reference:	46.04 degF	1527.00cps
High Reference:	146.30 degF	4253.00cps
Gain:	0.04	
Offset:	-9.42	
Delta Spacing	2	

Database File	17821.db
Dataset Pathname	tmp
Presentation Format	frttemp2
Dataset Creation	Tue Nov 12 10:04:04 2013
Charted by	Depth in Feet scaled 1:120

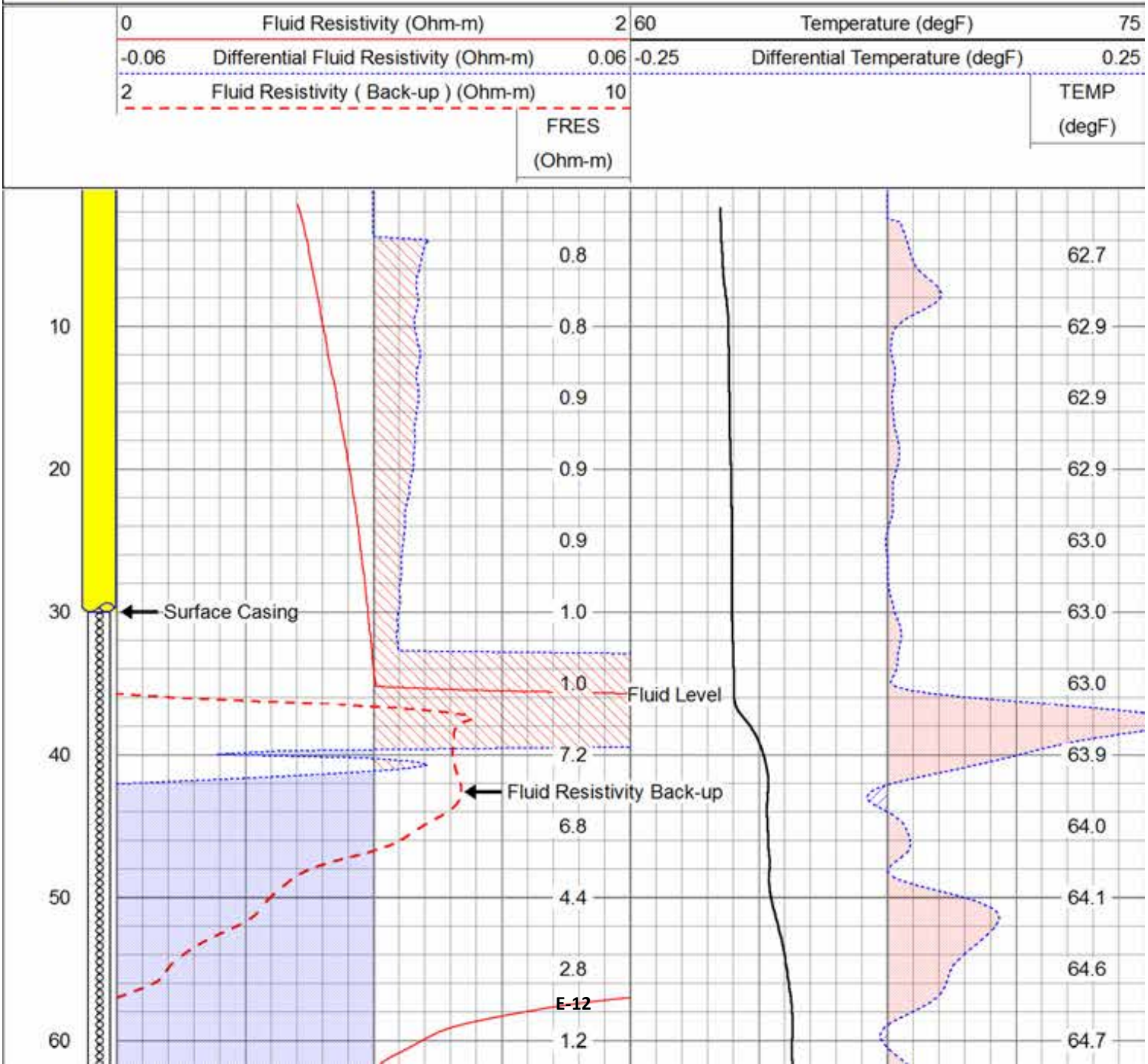

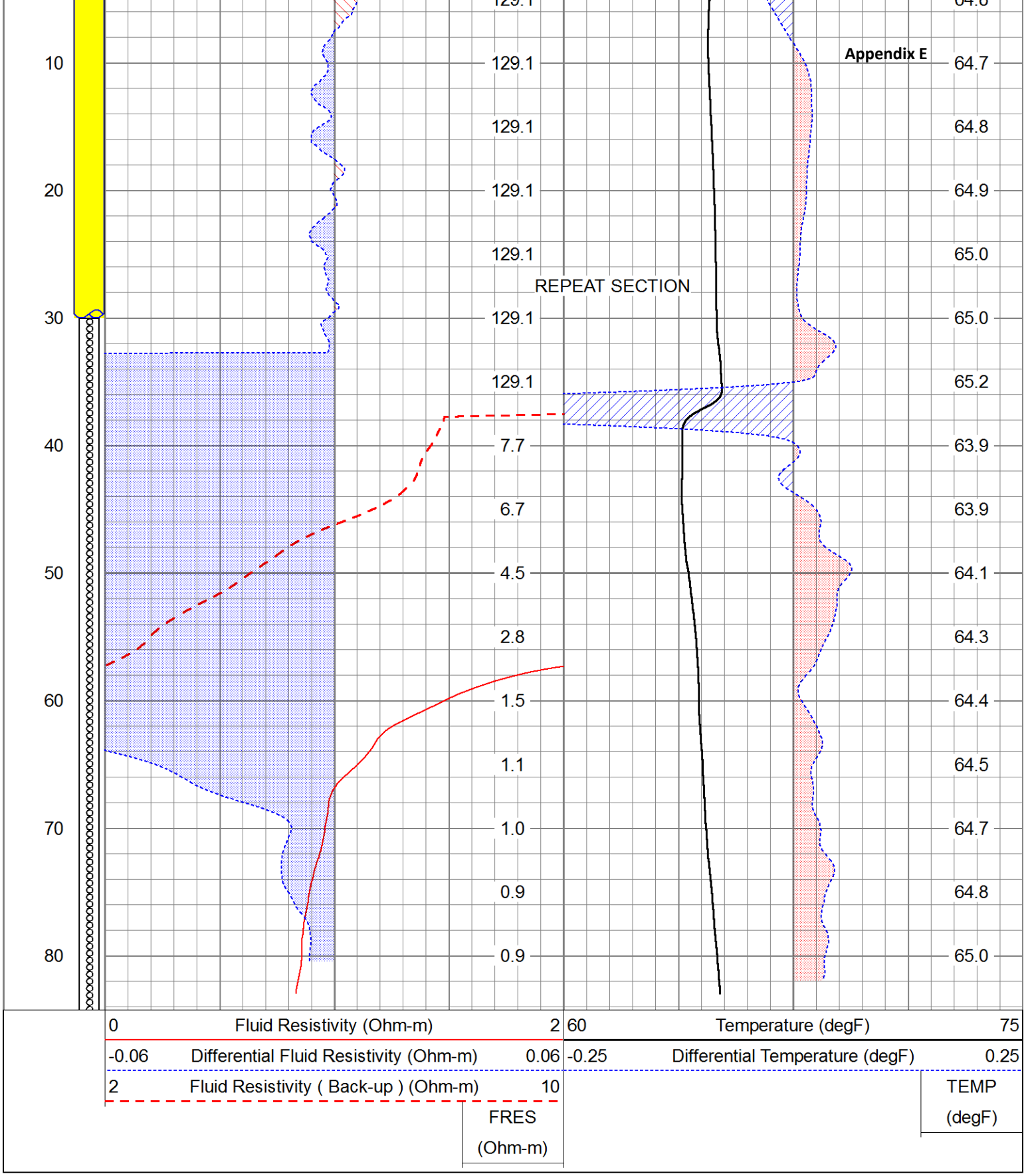
10
20
30
40
50
60
70
80
129.1
129.1
129.1
129.1
REPEAT SECTION
129.1
129.1
7.7
6.7
4.5
2.8
1.5
1.1
1.0
0.9
0.9
64.7
64.8
64.9
65.0
65.0
65.2
63.9
63.9
64.1
64.3
64.4
64.5
64.7
64.8
65.0
0
Fluid Resistivity (Ohm-m)
2
60
Temperature (degF)
75
-0.06
Differential Fluid Resistivity (Ohm-m)
0.06
-0.25
Differential Temperature (degF)
0.25
2
Fluid Resistivity (Back-up) (Ohm-m)
10
FRES
(Ohm-m)
TEMP
(degF)

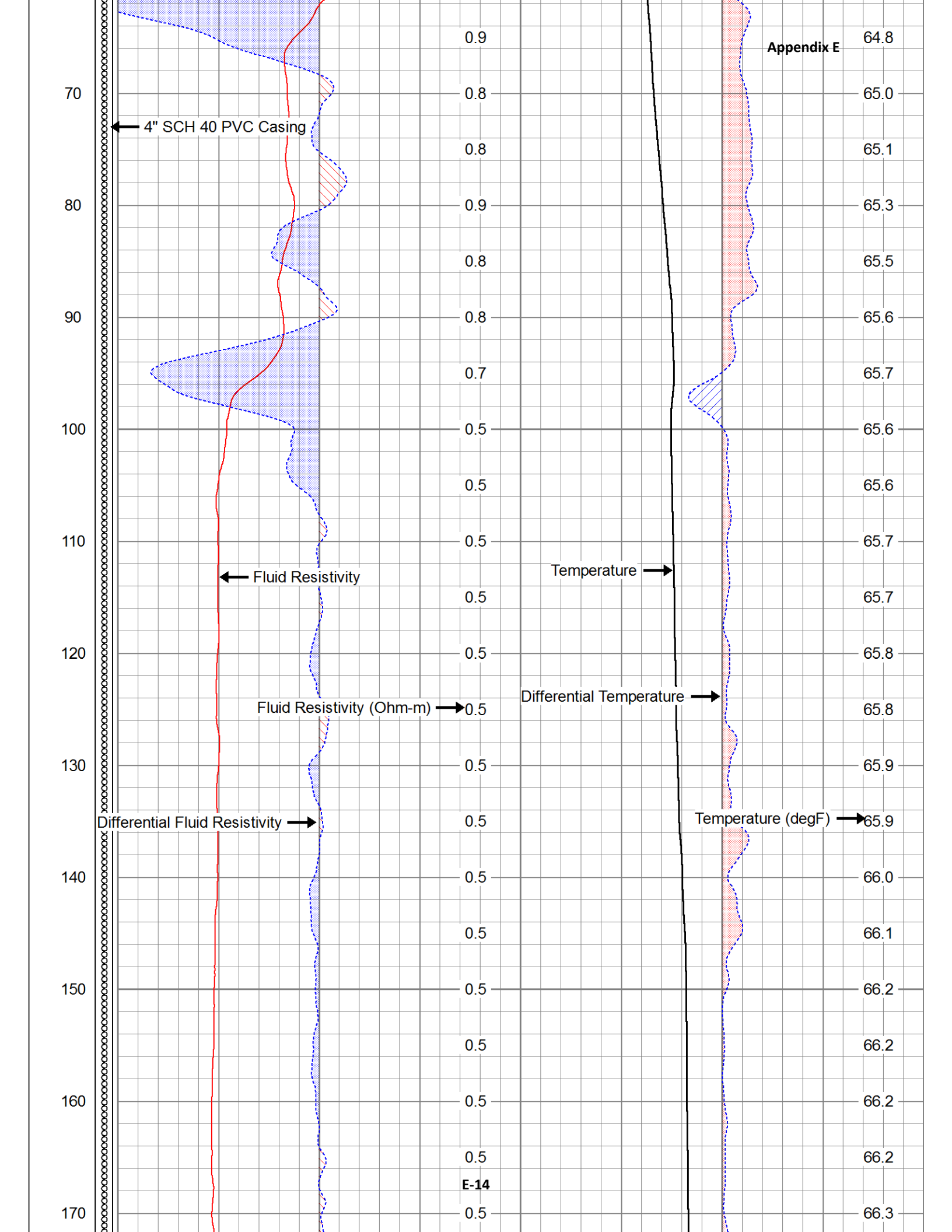
Appendix E
4" SCH 40 PVC Casing
Fluid Resistivity
Fluid Resistivity (Ohm-m)
Differential Fluid Resistivity
Temperature
Differential Temperature
Temperature (degF)
70
80
90
100
110
120
130
140
150
160
170
0.9
0.8
0.8
0.9
0.8
0.8
0.7
0.5
0.5
0.5
0.5
0.5
0.5
0.5
0.5
0.5
0.5
0.5
0.5
64.8
65.0
65.1
65.3
65.5
65.6
65.7
65.6
65.6
65.7
65.7
65.8
65.8
65.9
65.9
66.0
66.1
66.2
66.2
66.2
66.3

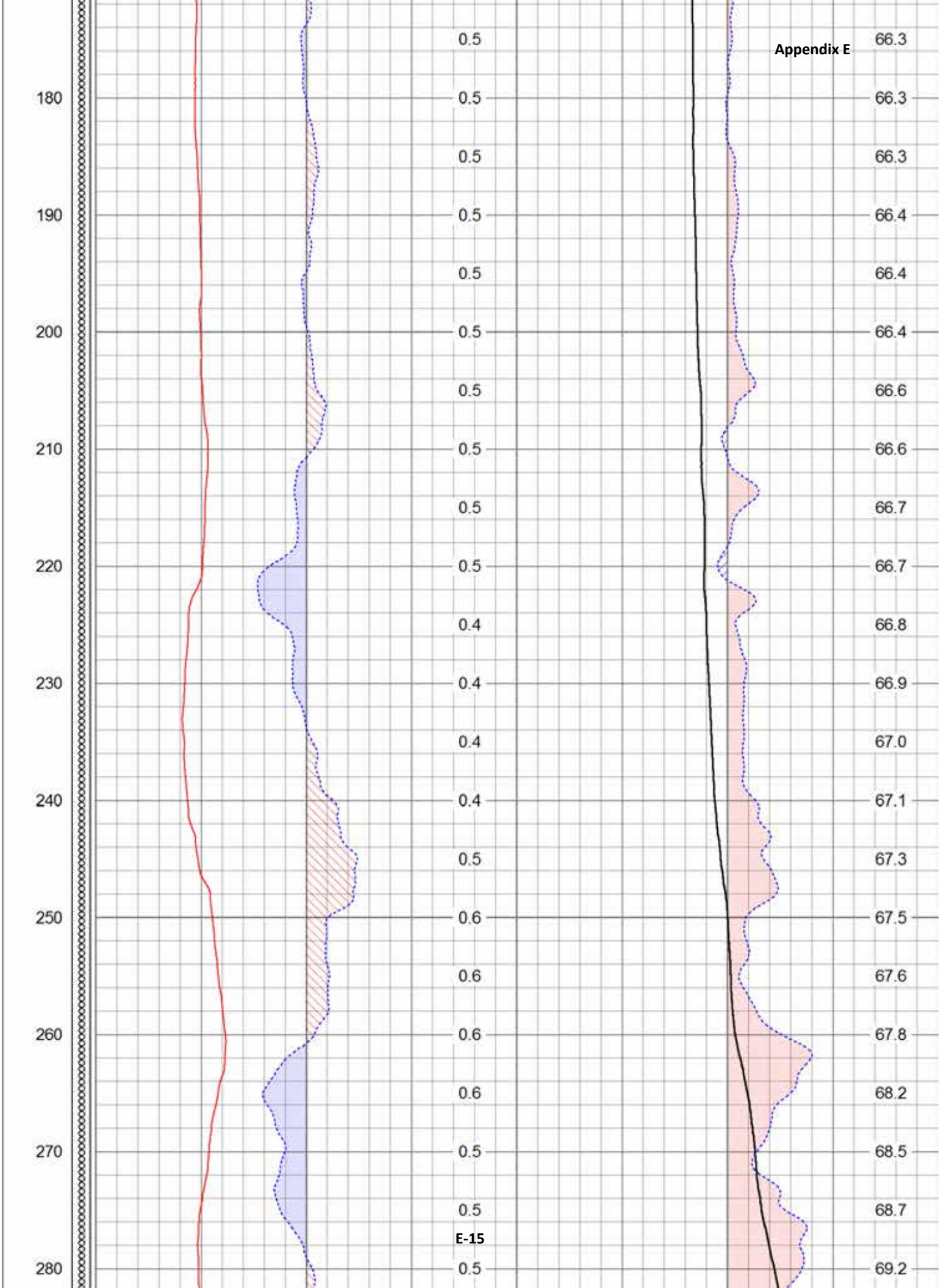
Appendix E
180
190
200
210
220
230
240
250
260
270
280
0.5
0.4
0.6
66.3
66.4
66.6
66.7
66.8
66.9
67.0
67.1
67.3
67.5
67.6
67.8
68.2
68.5
68.7
69.2

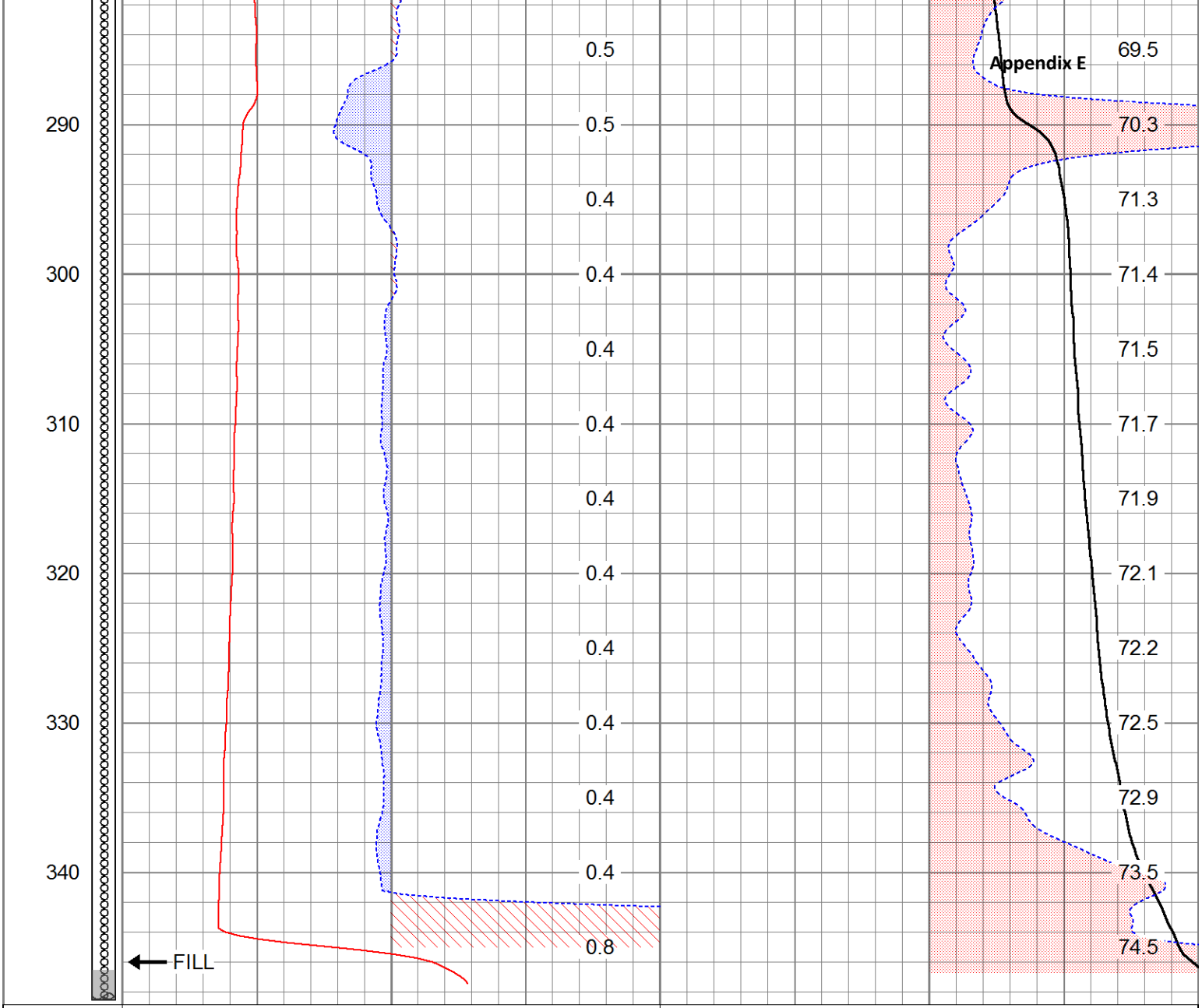

Database File	17821.db
Dataset Pathname	tmp_rpt
Presentation Format	frttemp2
Dataset Creation	Tue Nov 12 10:27:23 2013
Charted by	Depth in Feet scaled 1:120

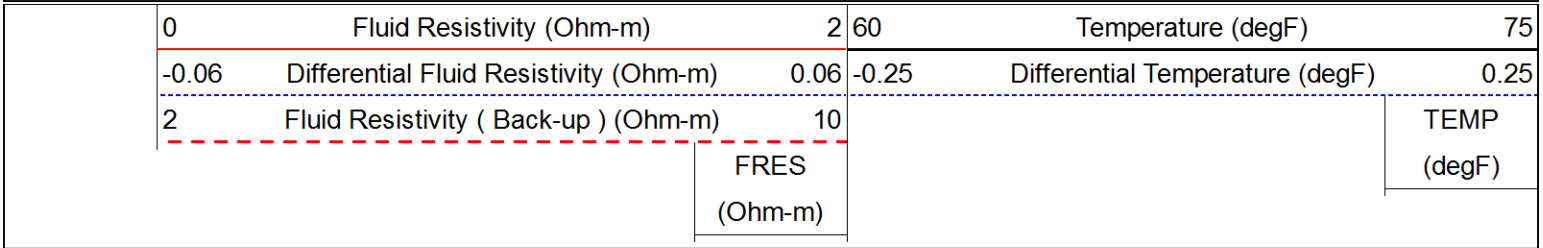

PACIFIC SURVEYS

DUAL INDUCTION GAMMA RAY

Job No. 18145

File No.

Company CASCADE DRILLING INC.

Well CX-B4

Field MARINA

County MONTEREY State CA

Location

LAPIS RD
GPS: N36o 42.714' W121o 47.910'

Other Services:

TEMPERATURE
FLUID RESISTIVITY

Permanent Datum	G.L.		Elevation	Elevation
Log Measured From	G.L.	0'	above perm. datum	K.B.
Drilling Measured From	G.L.			D.F.
				G.L.

Date	3-27-2014		
Run Number	ONE		
Depth Driller	348.5'		
Depth Logger	345'		
Bottom Logged Interval	345'		
Top Log Interval	0'		
Open Hole Size	8" (26-350')		
Type Fluid	WATER		
Density / Viscosity	N/A		
Fluid Level	35'		
Bentonite Seal	N/A		
Time Well Ready	13:00		
Time Logger on Bottom	13:30		
Equipment Number	PS-7		
Location	LA		
Recorded By	WATKINS		
Witnessed By	N. REYNOLDS		

Borehole Record				Tubing Record			
Run Number	Bit	From	To	Size	Weight	From	To
ONE	8"	26'	350'				

Casing Record	Size	Wgt/Ft	Top	Bottom
Surface String	10"	N/A	0'	25'
Prot. String				
Production String	4" PVC	N/A	0'	348.5'
Liner				

<<< Fold Here >>>

All interpretations are opinions based on inferences from electrical or other measurements and Pacific Surveys cannot and do not guarantee the accuracy or correctness of any interpretation, and we shall not, except in the case of gross or willful negligence on our part, be liable or responsible for any loss, costs, damages, or expenses incurred or sustained by anyone resulting from any interpretation made by any of our officers, agents or employees. These interpretations are also subject to Pacific Surveys' general terms and conditions set out in our current Price Schedule.

Comments

Calibration Report

Database File 18145.db
Dataset Pathname dil/dil.1
Dataset Creation Thu Mar 27 14:50:26 2014

Dual Induction Calibration Report

Serial-Model: 0001-ALT
Surface Cal Performed:

Loop:	Readings Air	Readings Loop		References Air	References Loop		Results m	Results b
Deep	1411.390	3440.570	cps	0.000	612.000	mmho/m	0.302	-425.677
Medium	2379.120	14715.100	cps	0.000	1960.000	mmho/m	0.159	-378.004

Gamma Ray Calibration Report

Serial Number:	PS_1	
Tool Model:	01	
Performed:	Wed Sep 19 16:56:13 2012	
Calibrator Value:	162.0	GAPI
Background Reading:	46.1	cps
Calibrator Reading:	180.8	cps
Sensitivity:	1.2020	GAPI/cps

Database File	18145.db
Dataset Pathname	dil/dil.1
Presentation Format	dil_ps
Dataset Creation	Thu Mar 27 14:50:26 2014
Charted by	Depth in Feet scaled 1:120

-125	SP (mV)	75	0	RILM (Ohm-m)	5	1500	CILM (mmho/m)	0
10	Gamma Ray (GAPI)	110	0	RILD (Ohm-m)	5	1500	CILD (mmho/m)	0
			5	RILM backup (Ohm-m)	105	15000	CILM backup (mmho/m)	1500
			5	RILD backup (Ohm-m)	105	15000	CILD backup (mmho/m)	1500

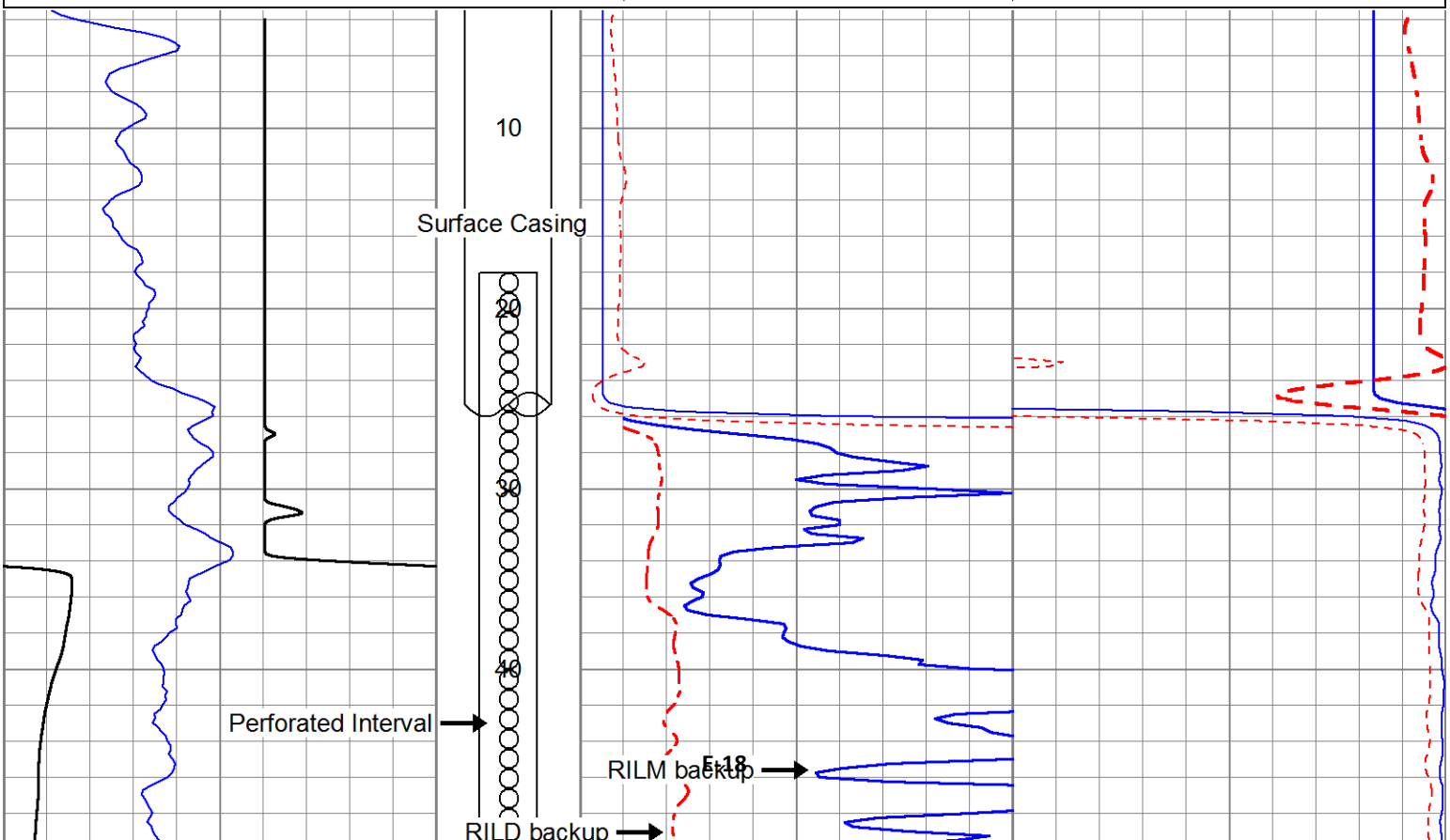

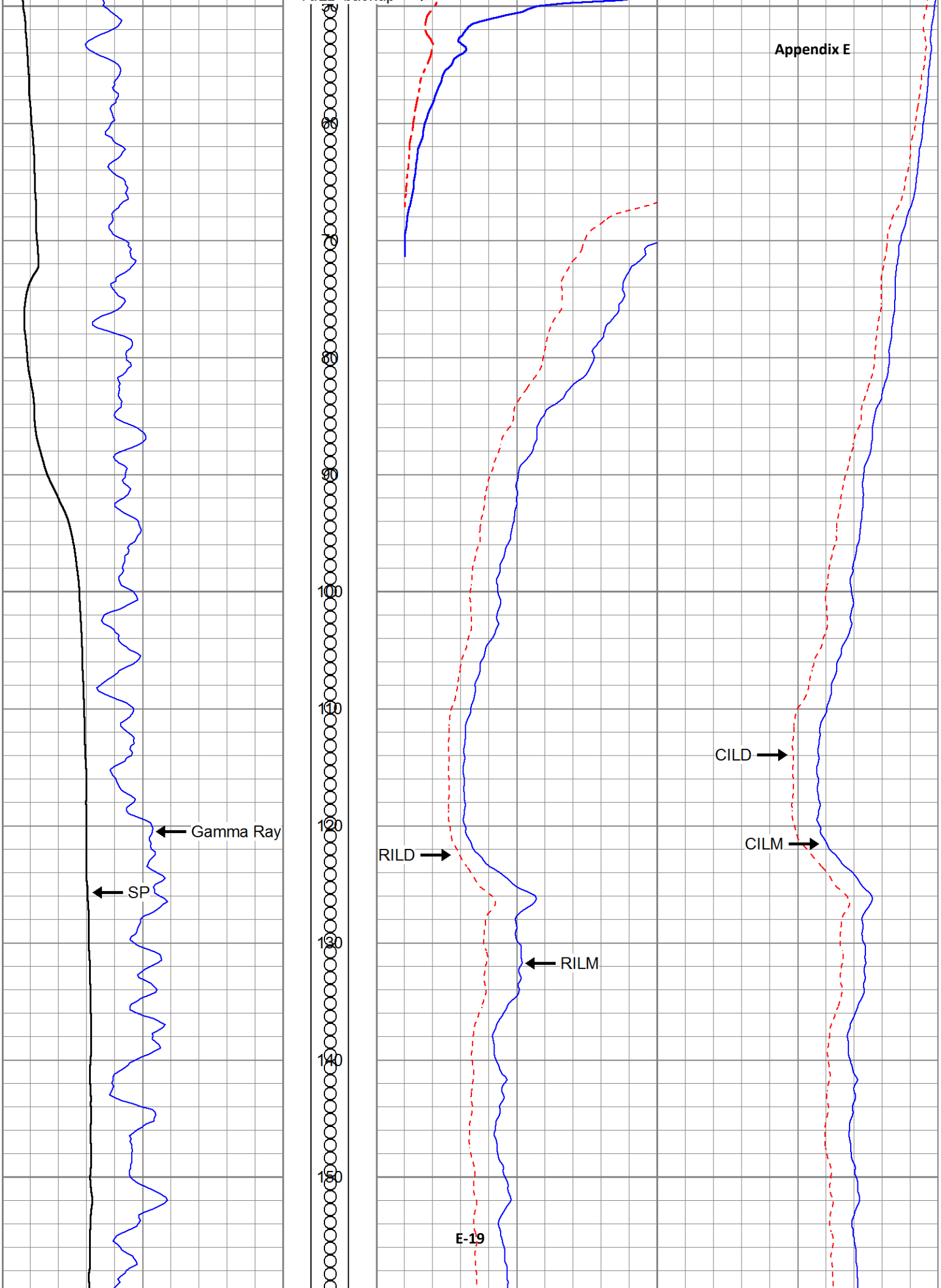
Gamma Ray
SP
RILD
RILM
CILD
CILM
60
70
80
90
100
110
120
130
140
150

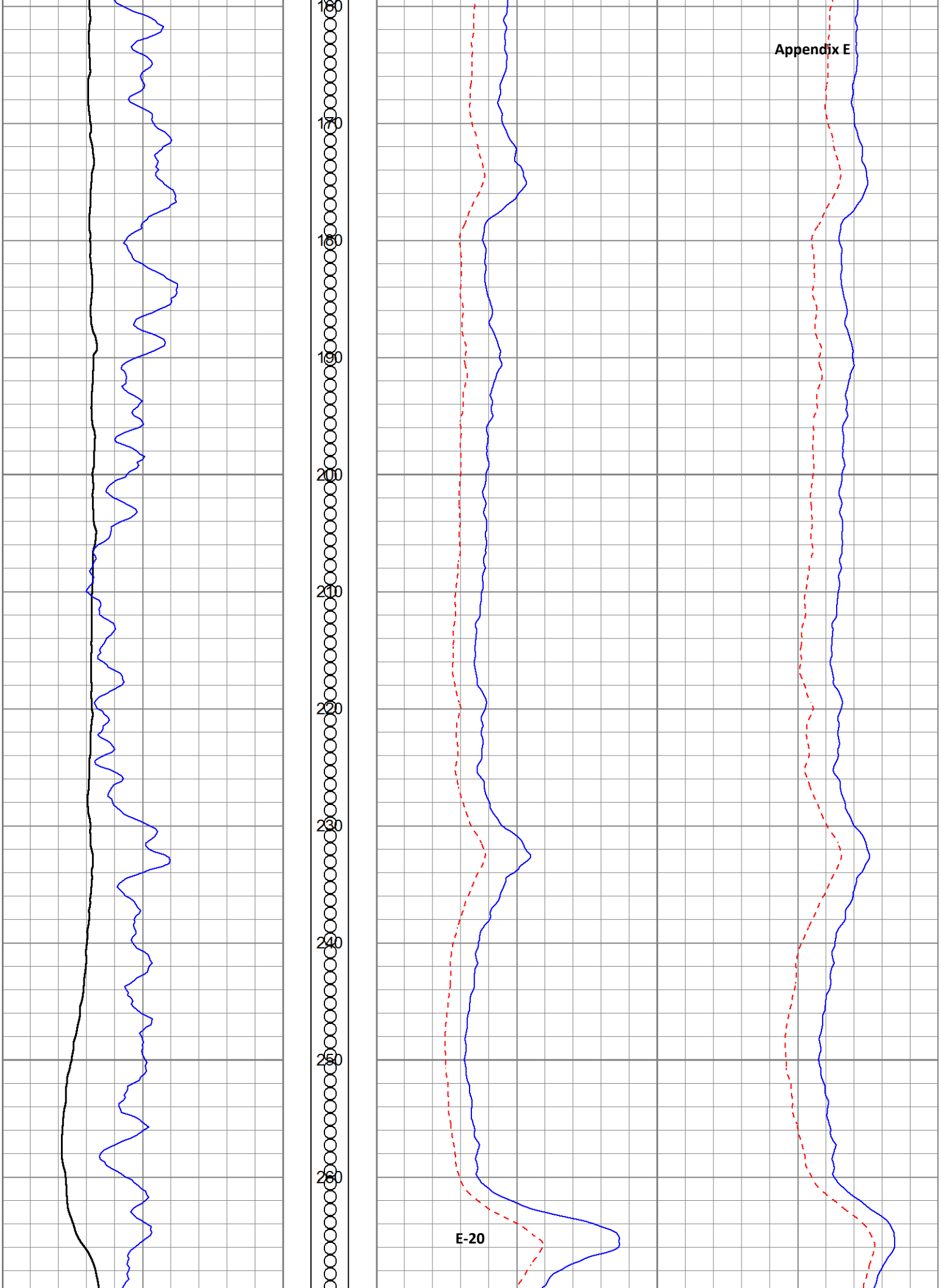

E-20

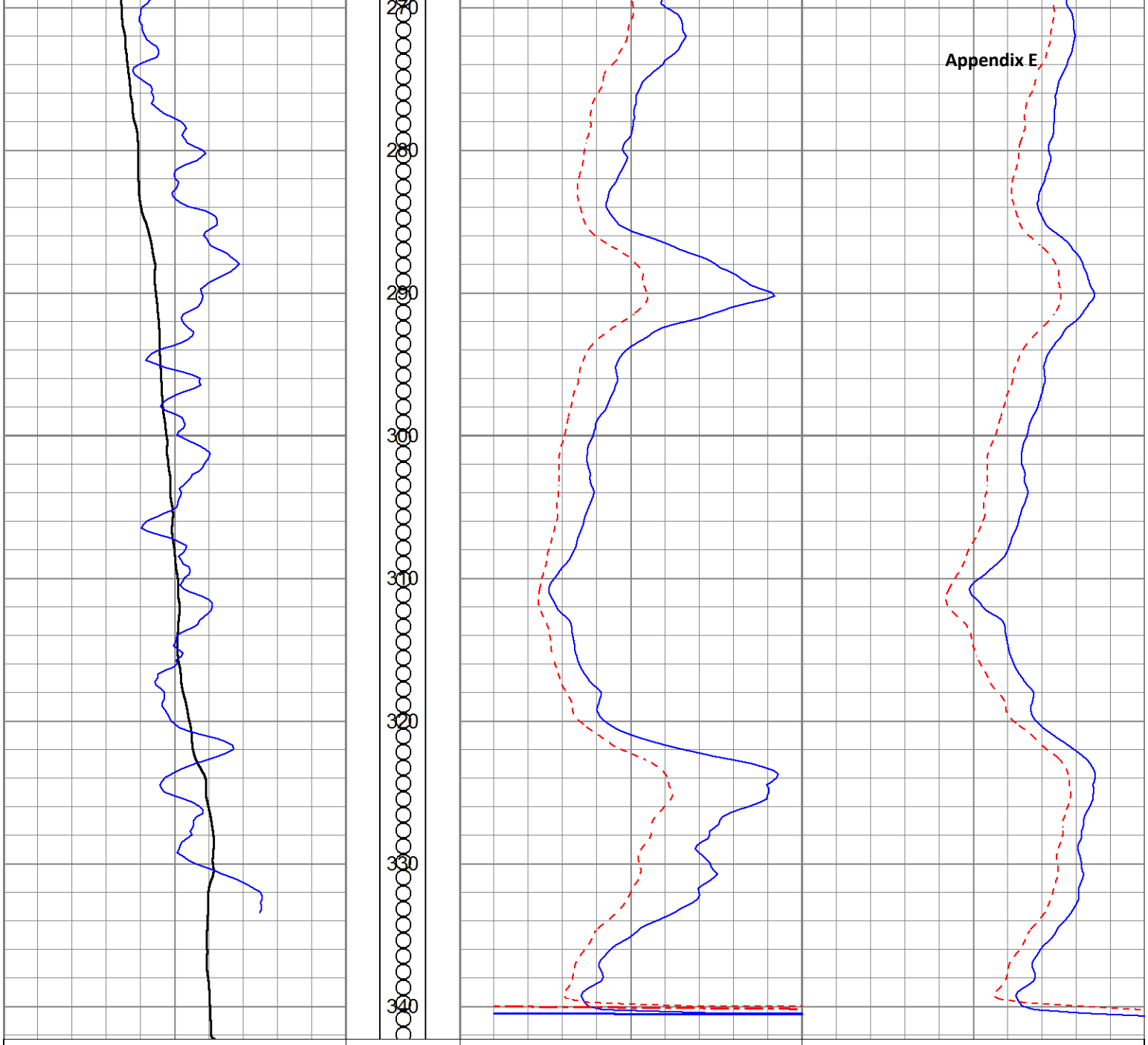
270
280
290
300
310
320
330
340
-125 SP (mV) 75
10 Gamma Ray (GAPI) 110
0 RILM (Ohm-m) 5
0 RILD (Ohm-m) 5
5 RILM backup (Ohm-m) 105
5 RILD backup (Ohm-m) 105
1500 CILM (mmho/m) 0
1500 CILD (mmho/m) 0
15000 CILM backup (mmho/m) 1500
15000 CILD backup (mmho/m) 1500

PACIFIC SURVEYS

DUAL INDUCTION GAMMA RAY

Job No. 18298

File No.

Company CASCADE DRILLING INC.

Well MDW-1

Field CASTROVILLE

County MONTEREY State CA

Location

MONTEREY DUNES WAY
GPS: N36o 46.540' W121o 47.694'

Other Services:

TEMPERATURE
FLUID RESISTIVITY

Permanent Datum	G.L.		Elevation	Elevation
Log Measured From	G.L.	0'	above perm. datum	K.B.
Drilling Measured From	G.L.			D.F.
				G.L.

Date	4-28-2014	
Run Number	ONE	
Depth Driller	292'	
Depth Logger	291'	
Bottom Logged Interval	291'	
Top Log Interval	0'	
Open Hole Size	9" (17-47')	8" (47-300')
Type Fluid	WATER	
Density / Viscosity	N/A	
Fluid Level	~17'	
Bentonite Seal	N/A	
Time Well Ready	11:00	
Time Logger on Bottom	11:20	
Equipment Number	PS-3	
Location	LA	
Recorded By	WATKINS	
Witnessed By	N. REYNOLDS	

Borehole Record				Tubing Record			
Run Number	Bit	From	To	Size	Weight	From	To
ONE	9"	17'	47'				
ONE	8"	47'	300'				

Casing Record	Size	Wgt/Ft	Top	Bottom
Surface String	10"	N/A	0'	17'
Prot. String				
Production String	4"	N/A	0'	292'
Liner				

<<< Fold Here >>>

All interpretations are opinions based on inferences from electrical or other measurements and Pacific Surveys cannot and do not guarantee the accuracy or correctness of any interpretation, and we shall not, except in the case of gross or willful negligence on our part, be liable or responsible for any loss, costs, damages, or expenses incurred or sustained by anyone resulting from any interpretation made by any of our officers, agents or employees. These interpretations are also subject to Pacific Surveys' general terms and conditions set out in our current Price Schedule.

Comments

4" CASING INSTALLED TO 294', FILL MATERIAL TAGGED AT 292', CASING HAD 0.010" SLOTS.

Calibration Report

Database File 18298.db
Dataset Pathname DIL
Dataset Creation Mon Apr 28 12:14:40 2014

Dual Induction Calibration Report

Serial-Model:	0001-ALT	
Surface Cal Performed:	Wed Aug 31 18:21:15 2011	**Appendix E**

Loop:	Readings Air	Readings Loop		References Air	References Loop		Results m	Results b
Deep	1407.490	3493.640	cps	0.000	612.000	mmho/m	0.293	-412.905
Medium	1908.120	14487.900	cps	0.000	1960.000	mmho/m	0.156	-297.296

Gamma Ray Calibration Report

Serial Number:	PS_1	
Tool Model:	01	
Performed:	Wed Aug 31 18:22:13 2011	
Calibrator Value:	162.0	GAPI
Background Reading:	46.1	cps
Calibrator Reading:	180.8	cps
Sensitivity:	1.2020	GAPI/cps

Database File	18298.db
Dataset Pathname	DIL
Presentation Format	dil_ps
Dataset Creation	Mon Apr 28 12:14:40 2014
Charted by	Depth in Feet scaled 1:120

-125	SP (mV)	75	0	RILM (Ohm-m)	5	1500	CILM (mmho/m)	0
10	Gamma Ray (GAPI)	110	0	RILD (Ohm-m)	5	1500	CILD (mmho/m)	0
			5	RILM backup (Ohm-m)	105	15000	CILM backup (mmho/m)	1500
			5	RILD backup (Ohm-m)	105	15000	CILD backup (mmho/m)	1500

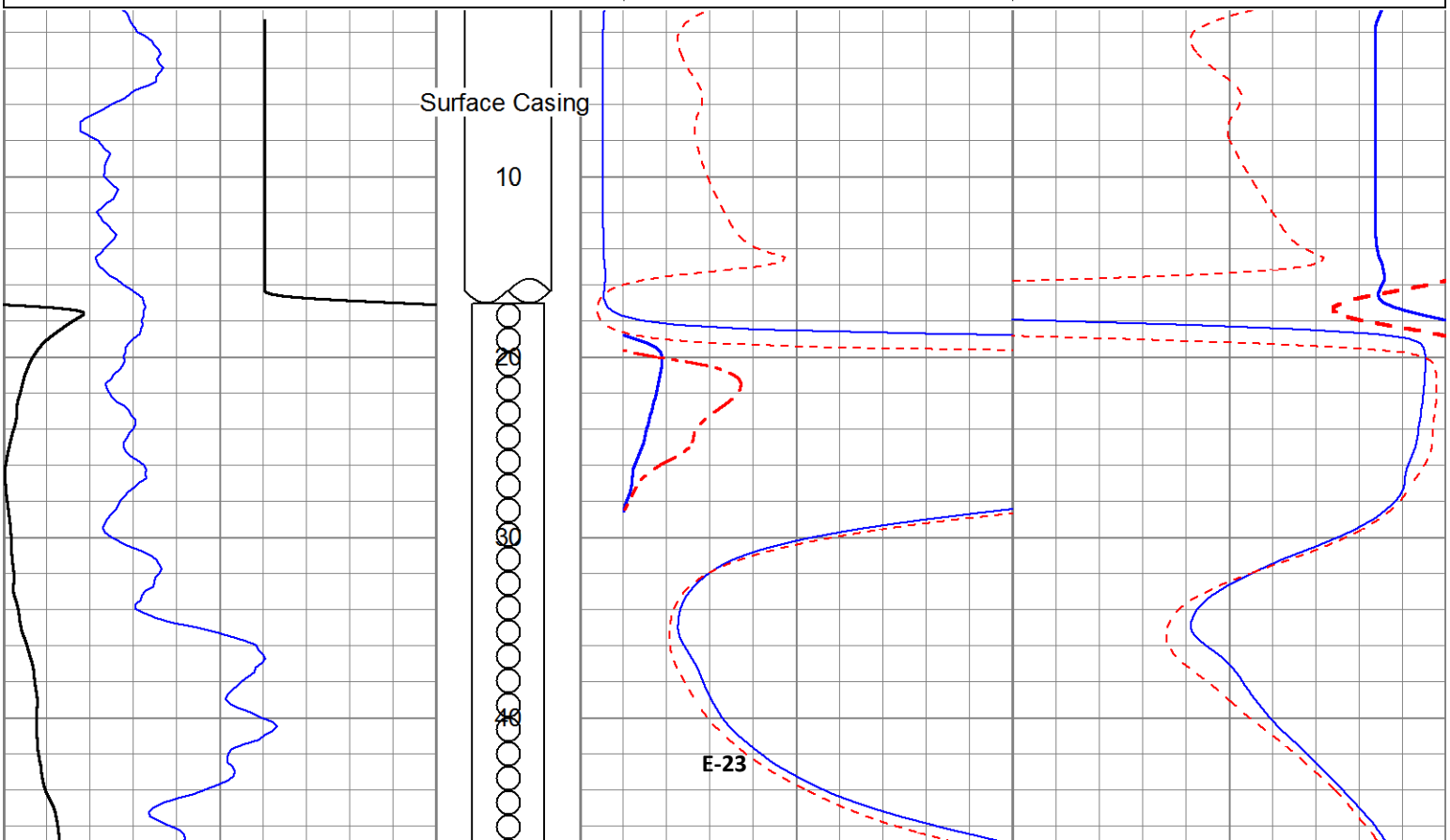

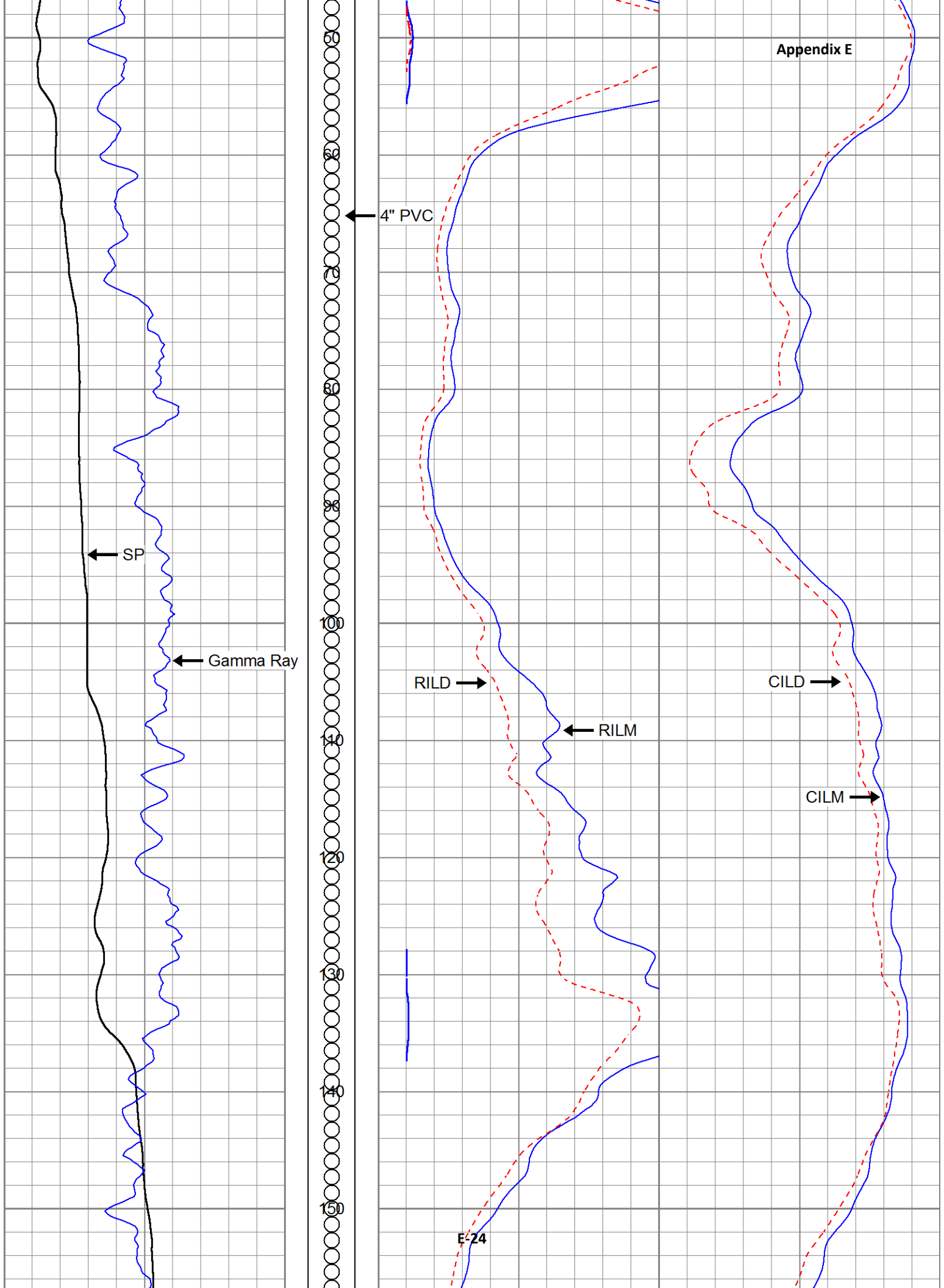
50
60
70
80
90
100
110
120
130
140
150
4" PVC
SP
Gamma Ray
RILD
RILM
CILD
CILM

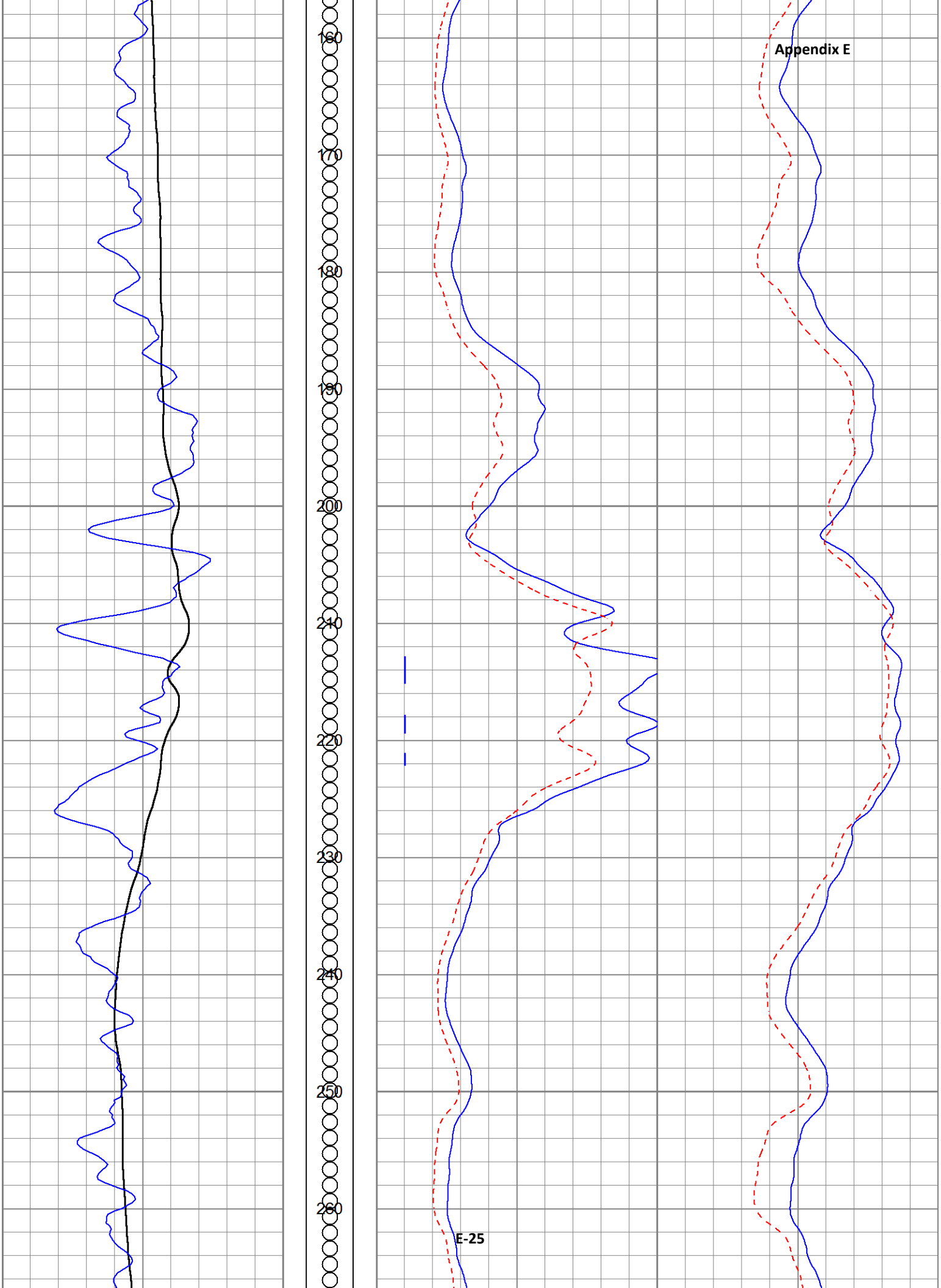
160
170
180
190
200
210
220
230
240
250
260

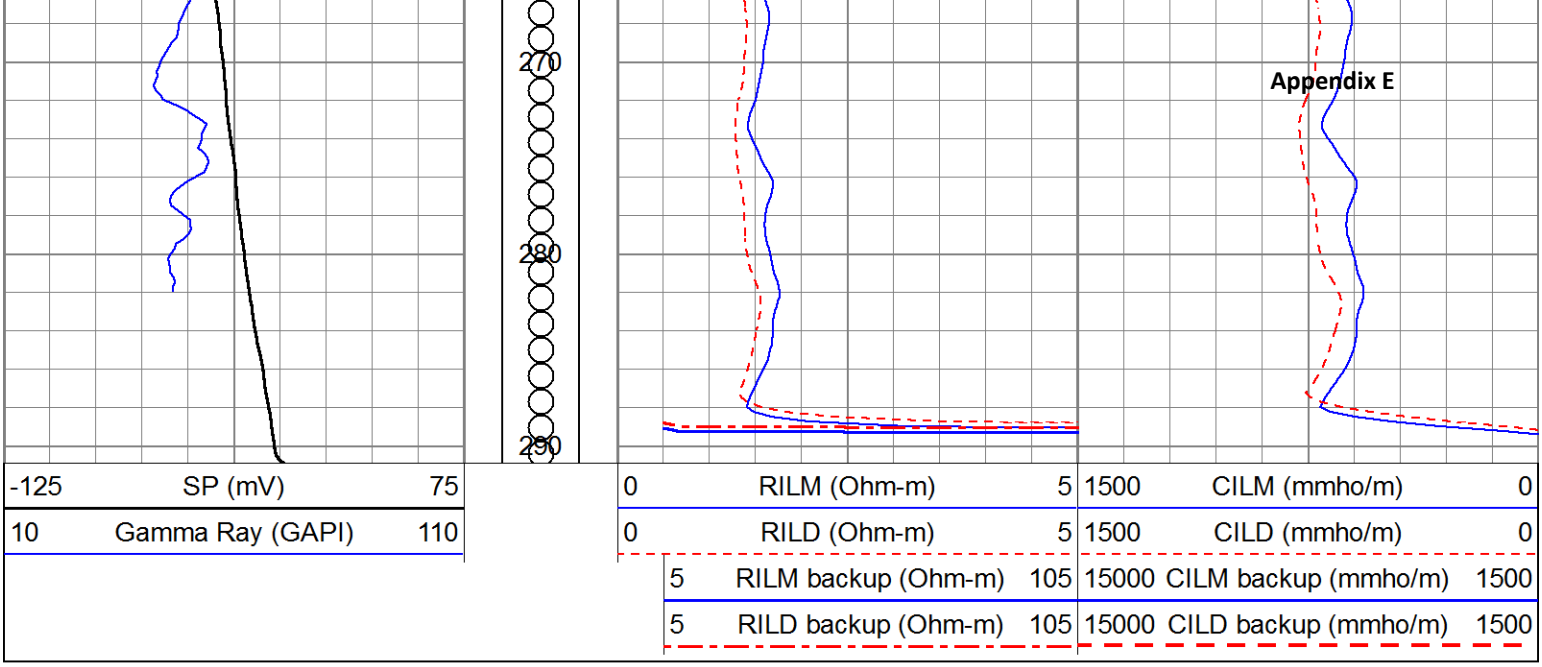

-125 SP (mV) 75	0 RILM (Ohm-m) 5	1500 CILM (mmho/m) 0
10 Gamma Ray (GAPI) 110	0 RILD (Ohm-m) 5	1500 CILD (mmho/m) 0
	5 RILM backup (Ohm-m) 105	15000 CILM backup (mmho/m) 1500
	5 RILD backup (Ohm-m) 105	15000 CILD backup (mmho/m) 1500

PACIFIC SURVEYS

DUAL INDUCTION GAMMA-RAY

Job No. 17719

File No.

Company CASCADE DRILLING, INC.

Well ML-1

Field MOSS LANDING

County MONTEREY State CA

Location

NEAR SANDHOLDT RD
GPS: N36o 47.967' W121o 47.343'

Other Services:

TEMPERATURE
FLUID RESISTIVITY

Permanent Datum	G.L.	Elevation above perm. datum	Elevation K.B.
Log Measured From	G.L. 0'		D.F.
Drilling Measured From	G.L.		G.L.

Date	10-4-2013
Run Number	ONE
Depth Driller	200'
Depth Logger	200'
Bottom Logged Interval	200'
Top Log Interval	0'
Open Hole Size	8"
Type Fluid	N/A
Density / Viscosity	N/A
Fluid Level	N/A
Bentonite Seal	N/A
Time Well Ready	15:30
Time Logger on Bottom	15:45
Equipment Number	PS-3
Location	LA
Recorded By	WATKINS
Witnessed By	N. REYNOLDS

Borehole Record				Tubing Record			
Run Number	Bit	From	To	Size	Weight	From	To
ONE	8"	0'	200'				

Casing Record	Size	Wgt/Ft	Top	Bottom
Surface String	9"	N/A	0'	10'
Prot. String	4"	N/A	0'	200'
Production String				
Liner				

<<< Fold Here >>>

All interpretations are opinions based on inferences from electrical or other measurements and Pacific Surveys cannot and do not guarantee the accuracy or correctness of any interpretation, and we shall not, except in the case of gross or willful negligence on our part, be liable or responsible for any loss, costs, damages, or expenses incurred or sustained by anyone resulting from any interpretation made by any of our officers, agents or employees. These interpretations are also subject to Pacific Surveys' general terms and conditions set out in our current Price Schedule.

Comments

0.010" SLOT FROM 10-200' BGS

Calibration Report

Database File 17719.db
Dataset Pathname dil
Dataset Creation Fri Oct 04 15:51:34 2013

Dual Induction Calibration Report

Serial-Model:	0001-ALT	
Surface Cal Performed:	Wed Aug 31 18:21:15 2011	**Appendix E**

Loop:	Readings Air	Readings Loop		References Air	References Loop		Results m	Results b
Deep	1407.490	3493.640	cps	0.000	612.000	mmho/m	0.293	-412.905
Medium	1908.120	14487.900	cps	0.000	1960.000	mmho/m	0.156	-297.296

Gamma Ray Calibration Report

Serial Number:	PS_1	
Tool Model:	01	
Performed:	Wed Aug 31 18:22:13 2011	
Calibrator Value:	162.0	GAPI
Background Reading:	46.1	cps
Calibrator Reading:	180.8	cps
Sensitivity:	1.2020	GAPI/cps

Database File	17719.db
Dataset Pathname	dil
Presentation Format	dil_ps
Dataset Creation	Fri Oct 04 15:51:34 2013
Charted by	Depth in Feet scaled 1:120

-100	SP (mV)	50	0	RILM (Ohm-m)	5	1500	CILM (mmho/m)	0
10	Gamma Ray (GAPI)	110	0	RILD (Ohm-m)	5	1500	CILD (mmho/m)	0
			5	RILM backup (Ohm-m)	50	15000	CILM backup (mmho/m)	1500
			5	RILD backup (Ohm-m)	50	15000	CILD backup (mmho/m)	1500

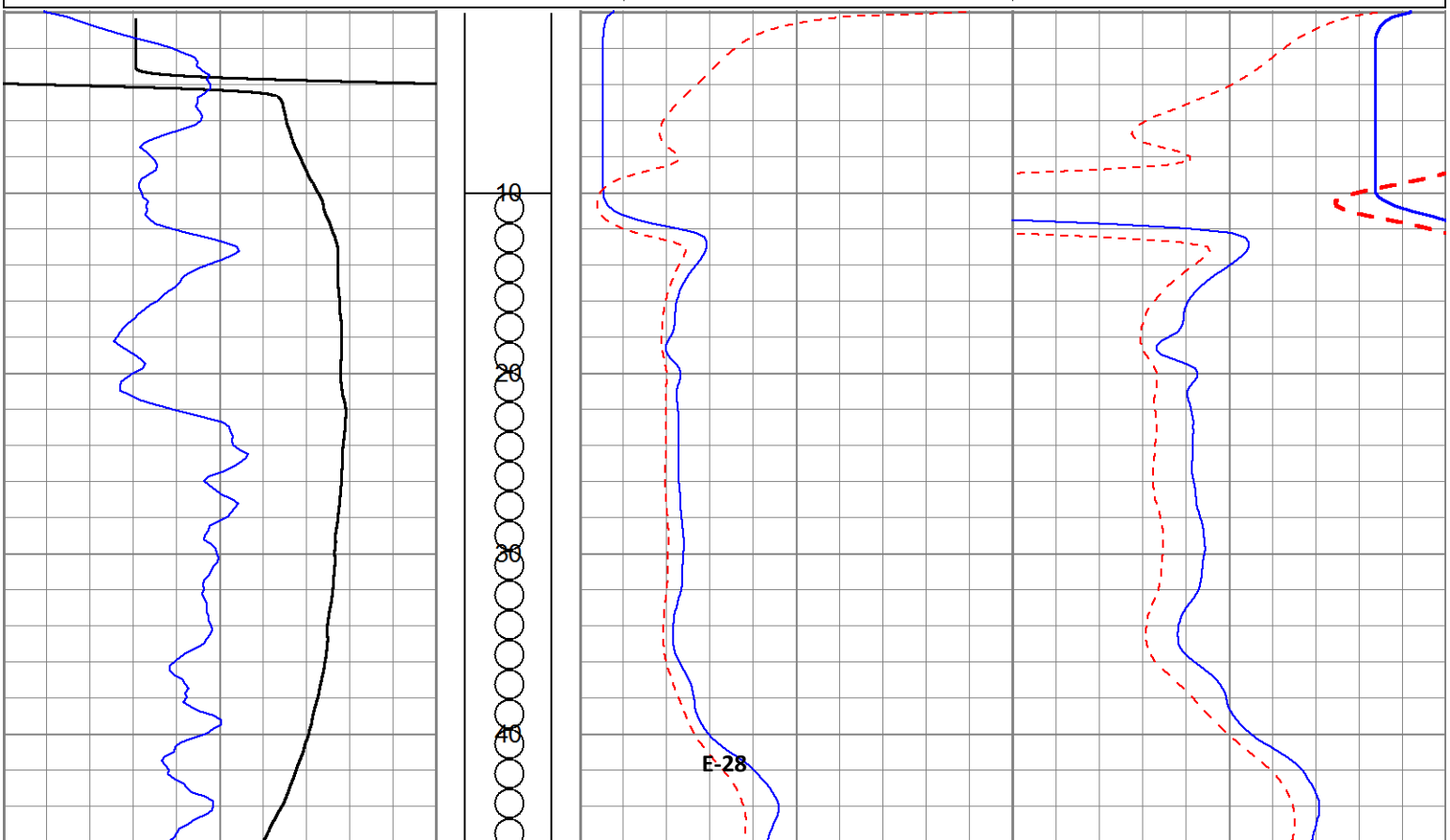

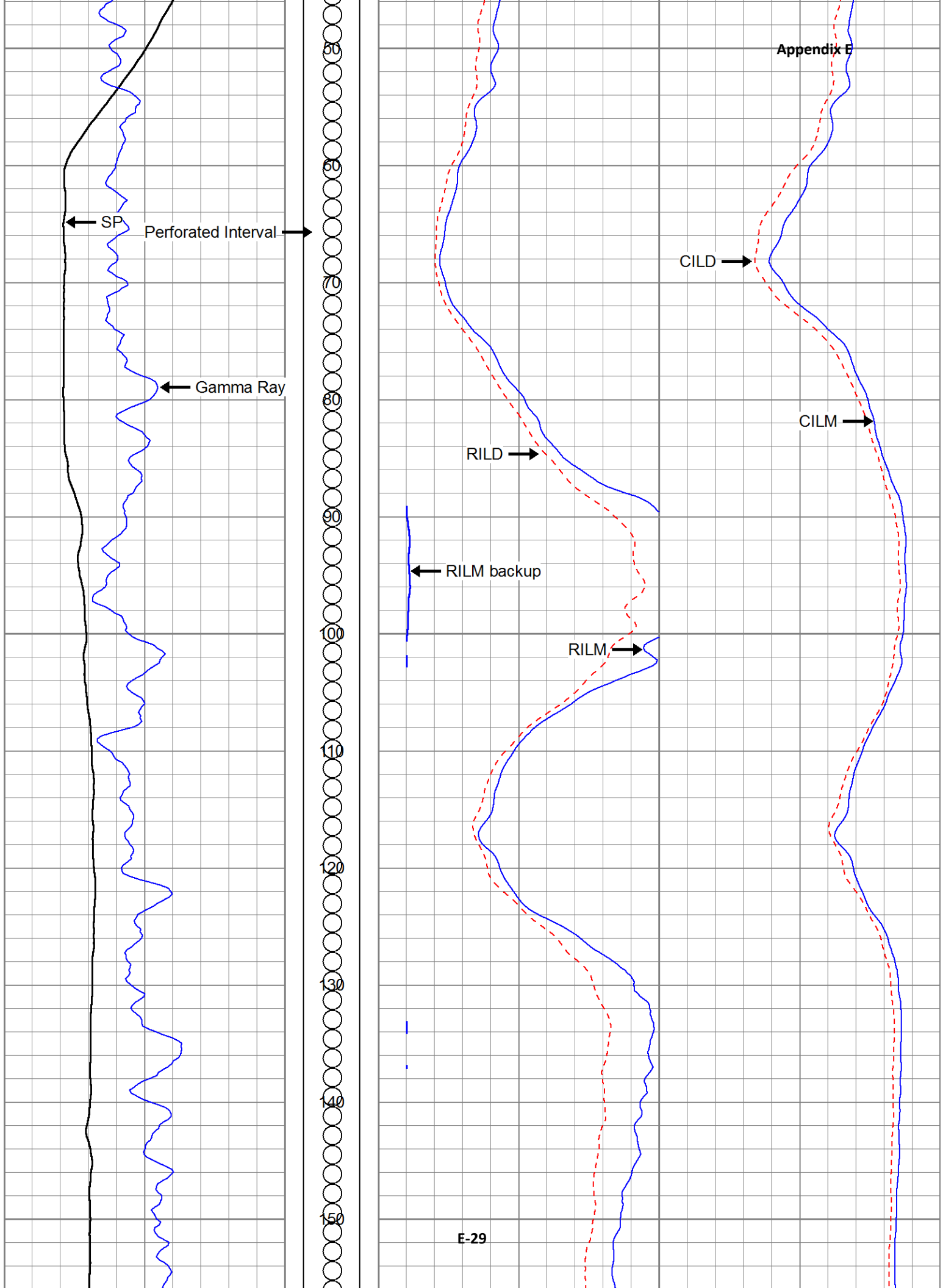
SP
Perforated Interval
Gamma Ray
RILD
RILM backup
RILM
CILD
CILM
50
60
70
80
90
100
110
120
130
140
150

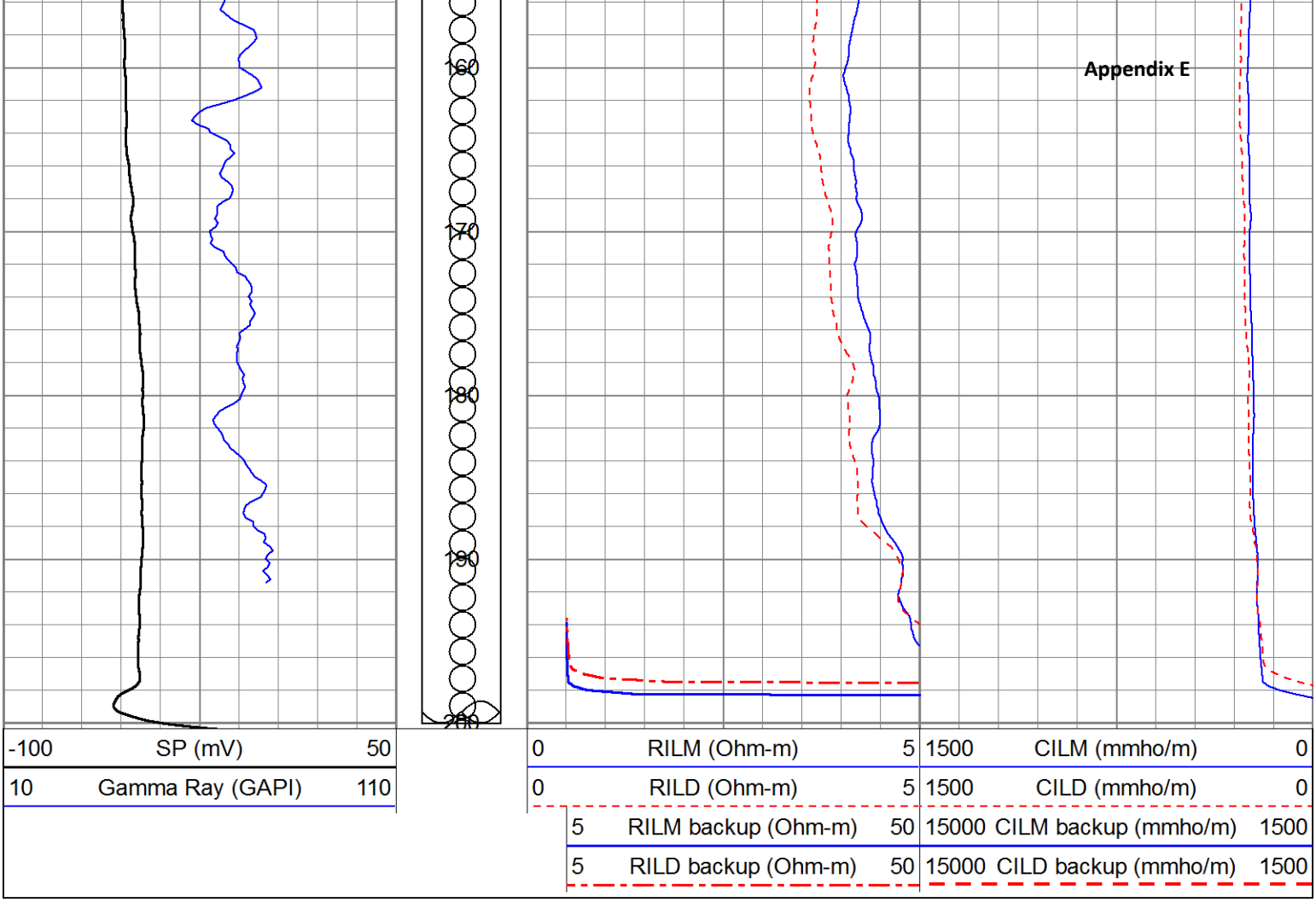
160
170
180
190
200
-100 SP (mV) 50
10 Gamma Ray (GAPI) 110
0 RILM (Ohm-m) 5
0 RILD (Ohm-m) 5
5 RILM backup (Ohm-m) 50
5 RILD backup (Ohm-m) 50
1500 CILM (mmho/m) 0
1500 CILD (mmho/m) 0
15000 CILM backup (mmho/m) 1500
15000 CILD backup (mmho/m) 1500

PACIFIC SURVEYS

DUAL INDUCTION GAMMA-RAY

Job No. 17870

File No.

Company CASCADE DRILLING

Well ML-2

Field MOSS LANDING

County MONTEREY State CA

Location

7549 SANDHOLDT RD.
GPS: N36o 48.205' W121o 47.218'

Other Services:

TEMPERATURE
FLUID RESISTIVITY

Permanent Datum	G.L.	Elevation above perm. datum	Elevation K.B.
Log Measured From	G.L. 0'		D.F.
Drilling Measured From	G.L.		G.L.

Date	12-11-2013
Run Number	ONE
Depth Driller	197'
Depth Logger	194.5'
Bottom Logged Interval	194.5'
Top Log Interval	0'
Open Hole Size	8"
Type Fluid	WATER
Density / Viscosity	N/A
Fluid Level	3.45'
Bentonite Seal	N/A
Time Well Ready	0945
Time Logger on Bottom	1000
Equipment Number	PS-7
Location	LA
Recorded By	SCHUMACHER
Witnessed By	N. REYNOLDS

Borehole Record				Tubing Record			
Run Number	Bit	From	To	Size	Weight	From	To
ONE	8"	0'	200'				

Casing Record	Size	Wgt/Ft	Top	Bottom
Surface String	8"	N/A	0'	23.5'
Prot. String				
Production String	4" PVC	SCH 40	0'	198'
Liner				

<<< Fold Here >>>

All interpretations are opinions based on inferences from electrical or other measurements and Pacific Surveys cannot and do not guarantee the accuracy or correctness of any interpretation, and we shall not, except in the case of gross or willful negligence on our part, be liable or responsible for any loss, costs, damages, or expenses incurred or sustained by anyone resulting from any interpretation made by any of our officers, agents or employees. These interpretations are also subject to Pacific Surveys' general terms and conditions set out in our current Price Schedule.

Comments

NOTE: 0.010" SLOT FROM 18.5' TO 198'.

Calibration Report

Database File 17870.db
Dataset Pathname DUAL
Dataset Creation Wed Dec 11 11:54:33 2013

Dual Induction Calibration Report

Serial-Model: 0001-ALT
Surface Cal Performed:

Loop:	Readings Air	Readings Loop		References Air	References Loop		Results m	Results b
Deep	1411.390	3440.570	cps	0.000	612.000	mmho/m	0.302	-425.677
Medium	2379.120	14715.100	cps	0.000	1960.000	mmho/m	0.159	-378.004

Gamma Ray Calibration Report

Serial Number:	PS_1	
Tool Model:	01	
Performed:	Wed Sep 19 16:56:13 2012	
Calibrator Value:	162.0	GAPI
Background Reading:	46.1	cps
Calibrator Reading:	180.8	cps
Sensitivity:	1.2020	GAPI/cps

Database File	17870.db
Dataset Pathname	DUAL
Presentation Format	dil_ps
Dataset Creation	Wed Dec 11 11:54:33 2013
Charted by	Depth in Feet scaled 1:120

-50	SP (mV)	50	0	RILM (Ohm-m)	5	1500	CILM (mmho/m)	0
10	Gamma Ray (GAPI)	110	0	RILD (Ohm-m)	5	1500	CILD (mmho/m)	0
			5	RILM backup (Ohm-m)	50	15000	CILM backup (mmho/m)	1500
			5	RILD backup (Ohm-m)	50	15000	CILD backup (mmho/m)	1500

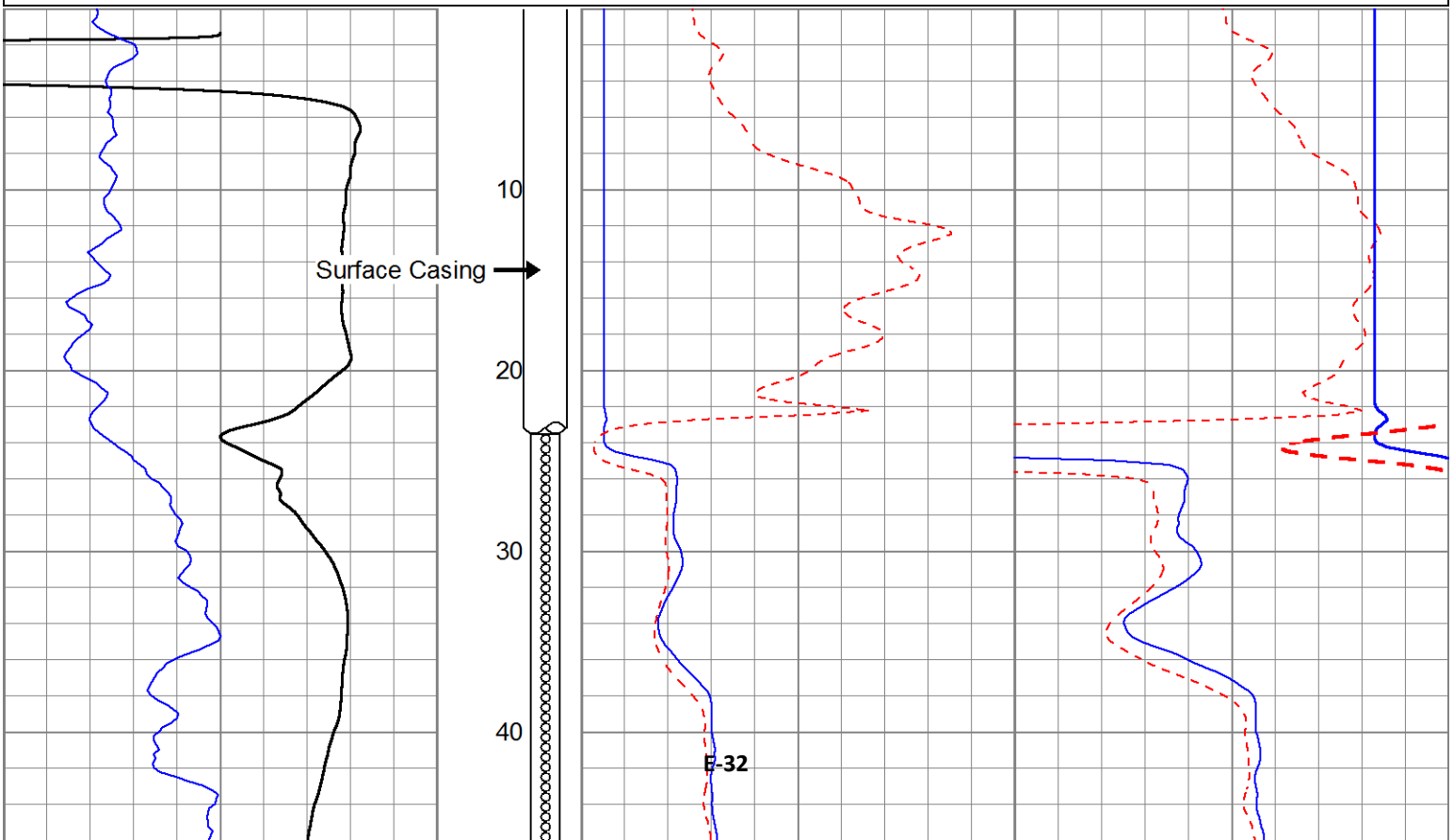

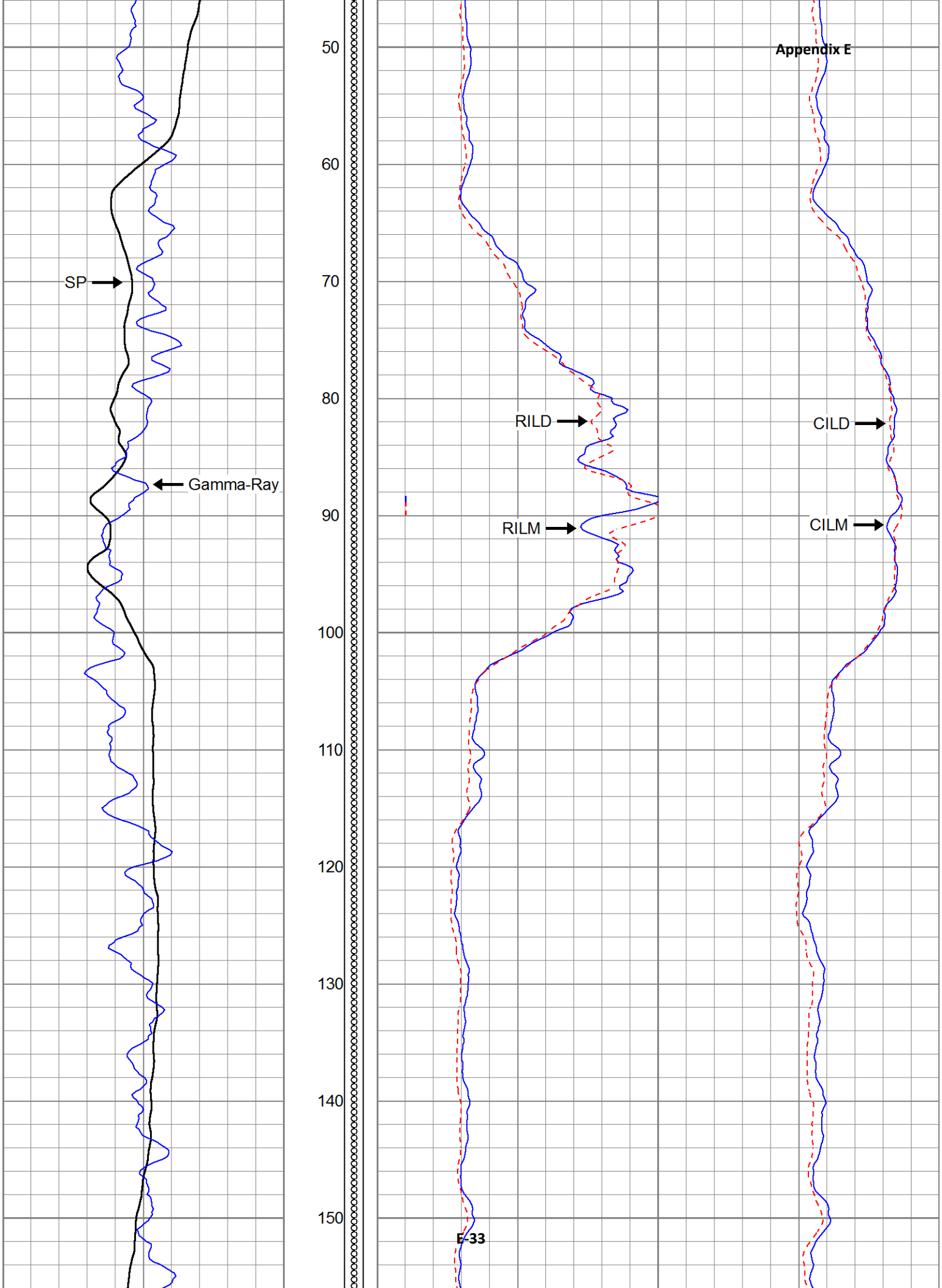
SP
Gamma-Ray
50
60
70
80
90
100
110
120
130
140
150
RILD
RILM
CILD
CILM

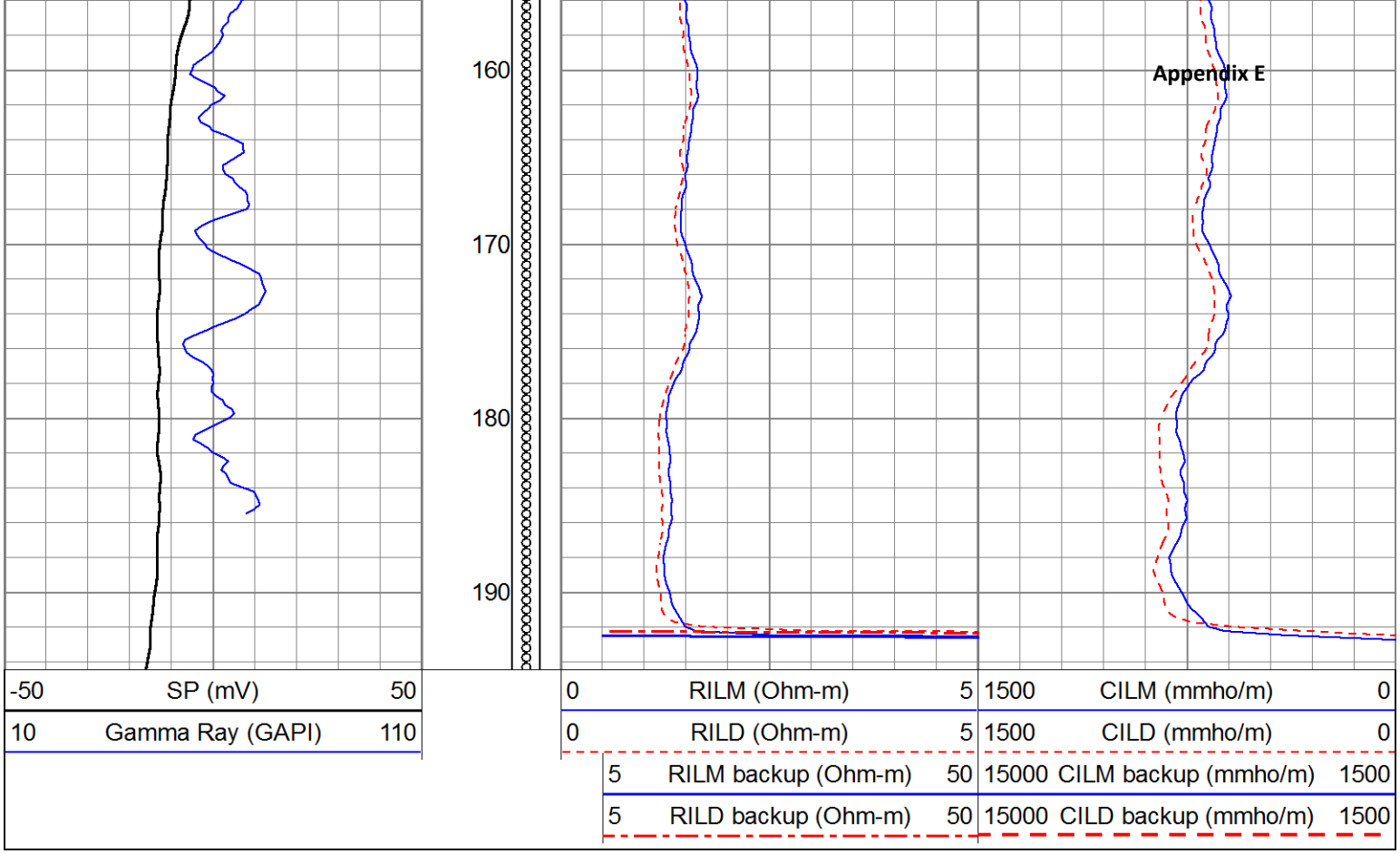
160
170
180
190
-50 SP (mV) 50
10 Gamma Ray (GAPI) 110
0 RILM (Ohm-m) 5
0 RILD (Ohm-m) 5
5 RILM backup (Ohm-m) 50
5 RILD backup (Ohm-m) 50
1500 CILM (mmho/m) 0
1500 CILD (mmho/m) 0
15000 CILM backup (mmho/m) 1500
15000 CILD backup (mmho/m) 1500

PACIFIC SURVEYS

DUAL INDUCTION GAMMA RAY

Job No. 17939

File No.

Company CASCADE DRILLING

Well ML-3

Field MOSS LANDING

County MONTEREY State CA

Location

Intersection of Moss Landing Rd & Cabrillo Hwy
GPS:N36o48.013' W121o47.021'

Other Services:

TEMPERATURE
FLUID RESISTIVITY

Permanent Datum	G.L.	Elevation above perm. datum	Elevation K.B.
Log Measured From	G.L. 0'		D.F.
Drilling Measured From	G.L.		G.L.

Date	01-09-2014
Run Number	ONE
Depth Driller	198'
Depth Logger	197.5'
Bottom Logged Interval	197.5'
Top Log Interval	0'
Open Hole Size	8"
Type Fluid	WATER
Density / Viscosity	N/A
Fluid Level	10'
Bentonite Seal	N/A
Time Well Ready	9:30 AM
Time Logger on Bottom	10:00 AM
Equipment Number	PS-7
Location	LA
Recorded By	ABREAU
Witnessed By	N. REYNOLDS

Borehole Record				Tubing Record			
Run Number	Bit	From	To	Size	Weight	From	To
ONE	8"	0'	200'				

Casing Record	Size	Wgt/Ft	Top	Bottom
Surface String	8"	N/A	0'	14'
Prot. String				
Production String	4" PVC	SCH 40	0'	200'
Liner				

<<< Fold Here >>>

All interpretations are opinions based on inferences from electrical or other measurements and Pacific Surveys cannot and do not guarantee the accuracy or correctness of any interpretation, and we shall not, except in the case of gross or willful negligence on our part, be liable or responsible for any loss, costs, damages, or expenses incurred or sustained by anyone resulting from any interpretation made by any of our officers, agents or employees. These interpretations are also subject to Pacific Surveys' general terms and conditions set out in our current Price Schedule.

Comments

NOTE: 0.010" SLOT FOR LENGTH OF PVC

Calibration Report

Database File 17939.db
Dataset Pathname dil2
Dataset Creation Thu Jan 09 11:22:56 2014

Dual Induction Calibration Report

Serial-Model: 0001-ALT
Surface Cal Performed:

Loop:	Readings Air	Readings Loop		References Air	References Loop		Results m	Results b
Deep	1407.490	3493.640	cps	0.000	612.000	mmho/m	0.293	-412.906
Medium	1908.120	14487.900	cps	0.000	1960.000	mmho/m	0.156	-297.296

Gamma Ray Calibration Report

Serial Number:	PS_1	
Tool Model:	01	
Performed:	Wed Sep 19 16:56:13 2012	
Calibrator Value:	162.0	GAPI
Background Reading:	46.1	cps
Calibrator Reading:	180.8	cps
Sensitivity:	1.2020	GAPI/cps

Database File	17939.db
Dataset Pathname	dil2
Presentation Format	dil_ps
Dataset Creation	Thu Jan 09 11:22:56 2014
Charted by	Depth in Feet scaled 1:120

-80	SP (mV)	20	0	RILM (Ohm-m)	5	1000	CILM (mmho/m)	0
10	Gamma Ray (GAPI)	110	0	RILD (Ohm-m)	5	1000	CILD (mmho/m)	0
			5	RILM backup (Ohm-m)	10	10000	CILM backup (mmho/m)	1000
			5	RILD backup (Ohm-m)	10	10000	CILD backup (mmho/m)	1000

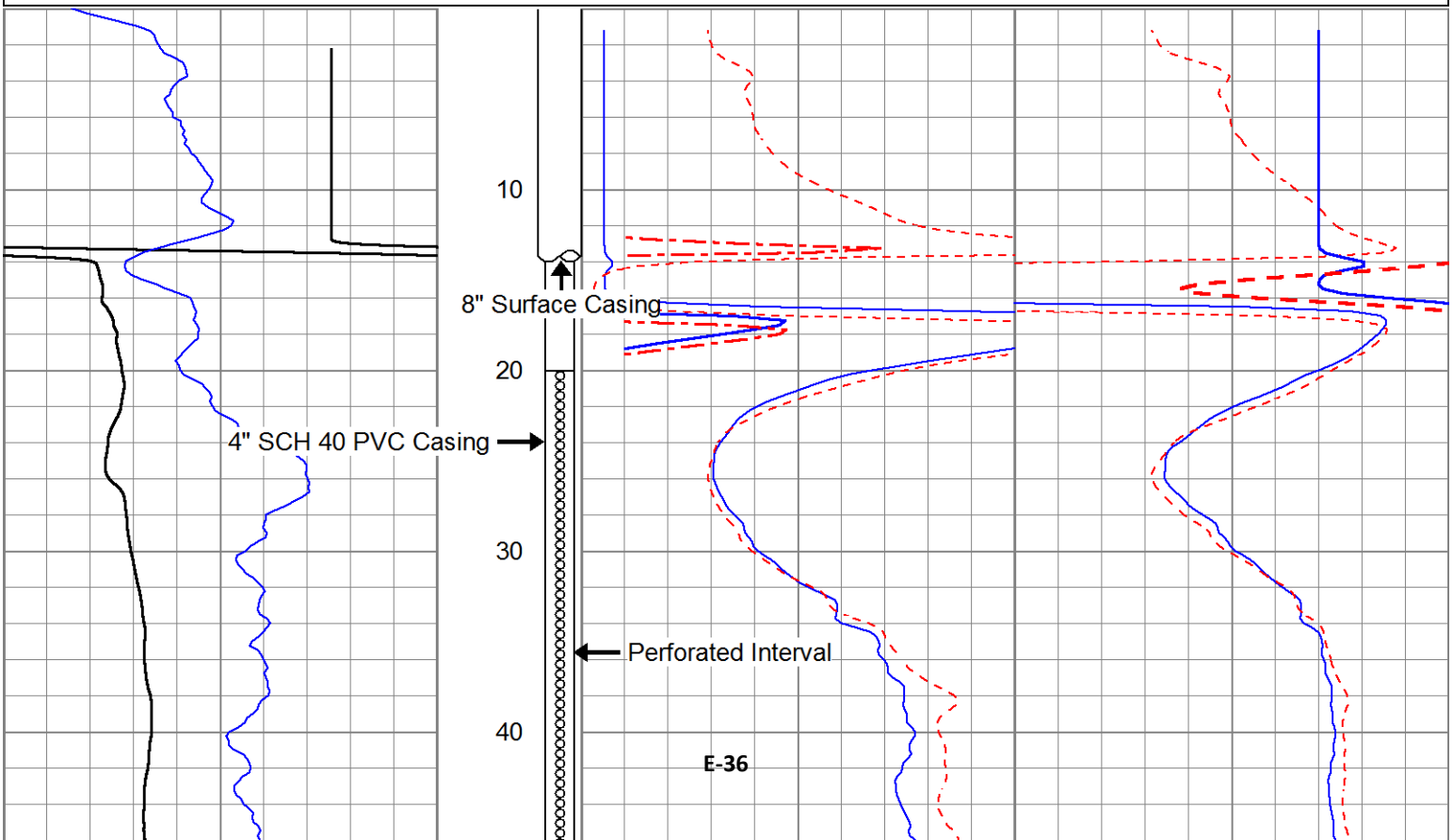

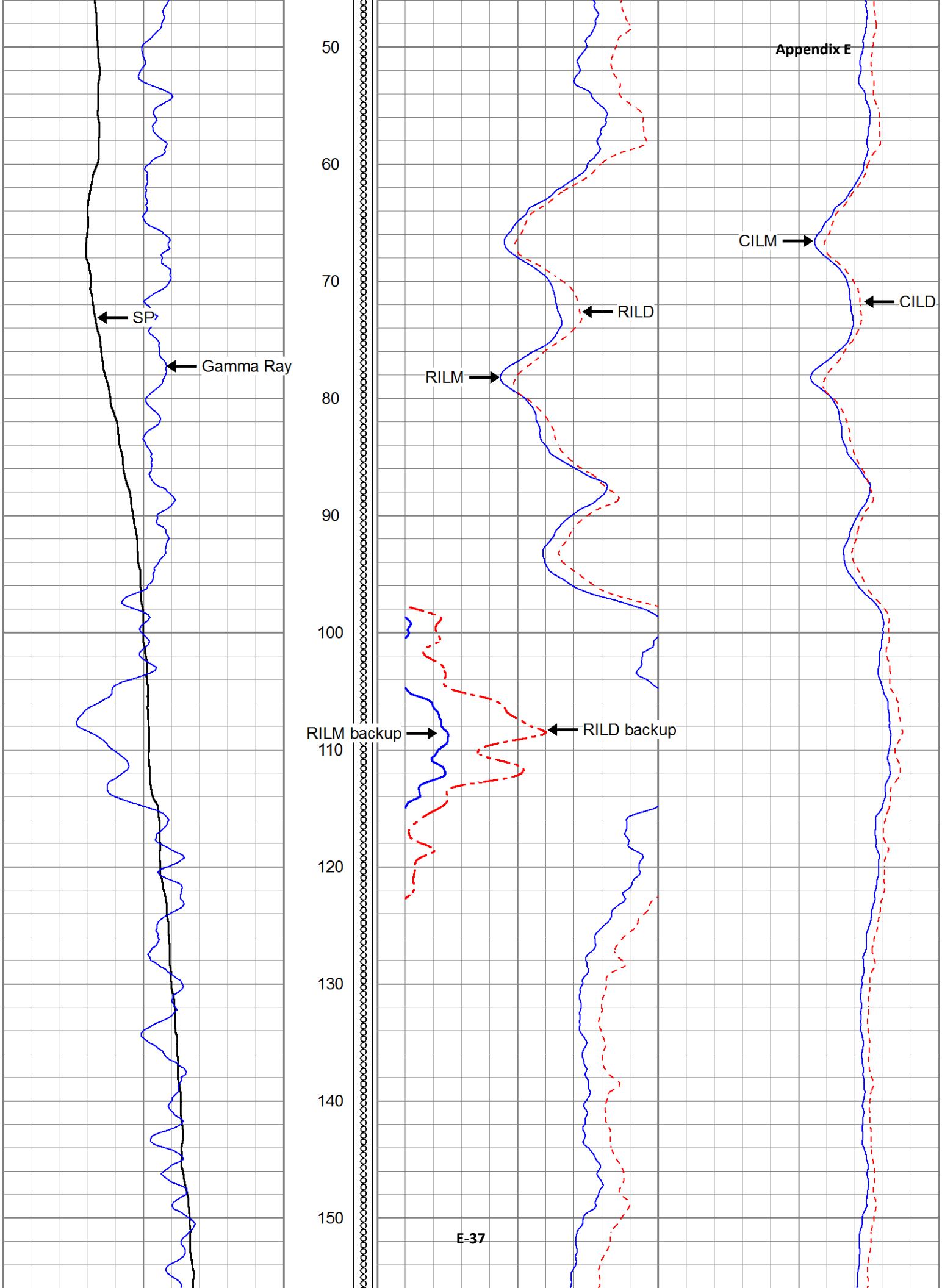
50
60
70
80
90
100
110
120
130
140
150
SP
Gamma Ray
RILD
RILM
RILM backup
RILD backup
CILM
CILD

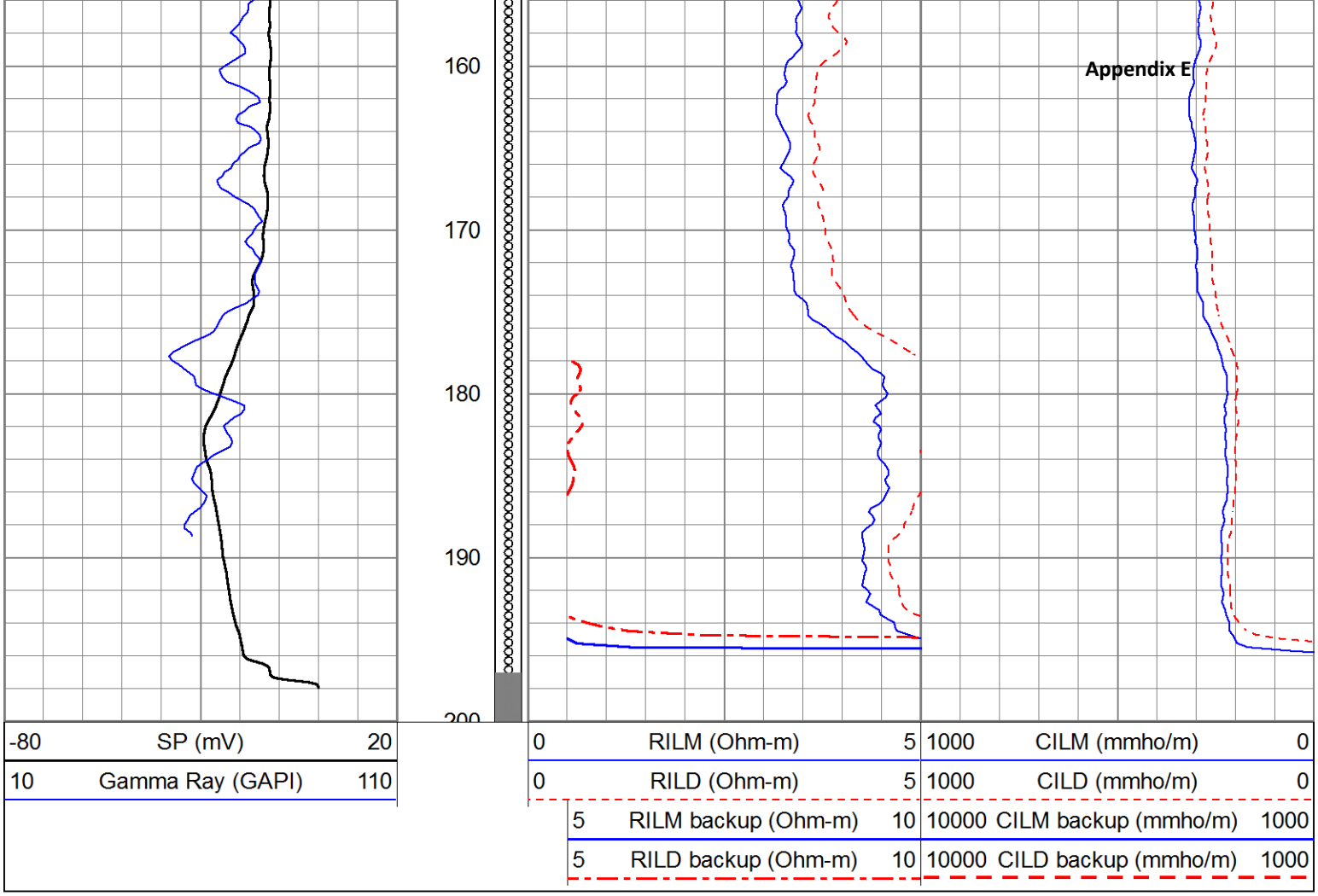
160
170
180
190
200
-80 SP (mV) 20
10 Gamma Ray (GAPI) 110
0 RILM (Ohm-m) 5
0 RILD (Ohm-m) 5
5 RILM backup (Ohm-m) 10
5 RILD backup (Ohm-m) 10
1000 CILM (mmho/m) 0
1000 CILD (mmho/m) 0
10000 CILM backup (mmho/m) 1000
10000 CILD backup (mmho/m) 1000

PACIFIC SURVEYS

DUAL INDUCTION GAMMA-RAY

Job No. 17859

File No.

Company CASCADE DRILLING

Well ML-4

Field MOSS LANDING

County MONTEREY State CA

Location

SOUTH OF INTERSECTION OF CABRILLO HWY & DOLAN RD
GPS: N36o 48.156' W121o 47.030'

Other Services:

TEMPERATURE
FLUID RESISTIVITY

Permanent Datum	G.L.	Elevation above perm. datum	Elevation K.B. D.F. G.L.
Log Measured From	G.L. 0'		
Drilling Measured From	G.L.		

Date	12-3-2013
Run Number	ONE
Depth Driller	195.5'
Depth Logger	195.5'
Bottom Logged Interval	195.5'
Top Log Interval	0'
Open Hole Size	8"
Type Fluid	WATER
Density / Viscosity	N/A
Fluid Level	28'
Bentonite Seal	N/A
Time Well Ready	13:00
Time Logger on Bottom	13:15
Equipment Number	PS-7
Location	LA
Recorded By	WATKINS
Witnessed By	N. REYNOLDS

Borehole Record				Tubing Record			
Run Number	Bit	From	To	Size	Weight	From	To
ONE	8"	0'	201'				

Casing Record	Size	Wgt/Ft	Top	Bottom
Surface String	8"	N/A	0'	14.5'
Prot. String				
Production String	4" PVC	SCH 40	0'	195.5'
Liner				

<<< Fold Here >>>

All interpretations are opinions based on inferences from electrical or other measurements and Pacific Surveys cannot and do not guarantee the accuracy or correctness of any interpretation, and we shall not, except in the case of gross or willful negligence on our part, be liable or responsible for any loss, costs, damages, or expenses incurred or sustained by anyone resulting from any interpretation made by any of our officers, agents or employees. These interpretations are also subject to Pacific Surveys' general terms and conditions set out in our current Price Schedule.

Comments

NOTE: 0.010" SLOT FOR LENGTH OF PVC

Calibration Report

Database File 17859.db
Dataset Pathname dil
Dataset Creation Tue Dec 03 14:01:05 2013

Dual Induction Calibration Report

Serial-Model: 0001-ALT
Surface Cal Performed:

Appendix E

Loop:	Readings Air	Readings Loop		References Air	References Loop		Results m	Results b
Deep	1411.390	3440.570	cps	0.000	612.000	mmho/m	0.302	-425.677
Medium	2379.120	14715.100	cps	0.000	1960.000	mmho/m	0.159	-378.004

Gamma Ray Calibration Report

Serial Number:	PS_1	
Tool Model:	01	
Performed:	Wed Sep 19 16:56:13 2012	
Calibrator Value:	162.0	GAPI
Background Reading:	46.1	cps
Calibrator Reading:	180.8	cps
Sensitivity:	1.2020	GAPI/cps

Database File	17859.db
Dataset Pathname	dil
Presentation Format	dil_ps
Dataset Creation	Tue Dec 03 14:01:05 2013
Charted by	Depth in Feet scaled 1:240

-100	SP (mV)	0	0	RILM (Ohm-m)	5	1500	CILM (mmho/m)	0
10	Gamma Ray (GAPI)	110	0	RILD (Ohm-m)	5	1500	CILD (mmho/m)	0
			5	RILM backup (Ohm-m)	50	15000	CILM backup (mmho/m)	1500
			5	RILD backup (Ohm-m)	50	15000	CILD backup (mmho/m)	1500

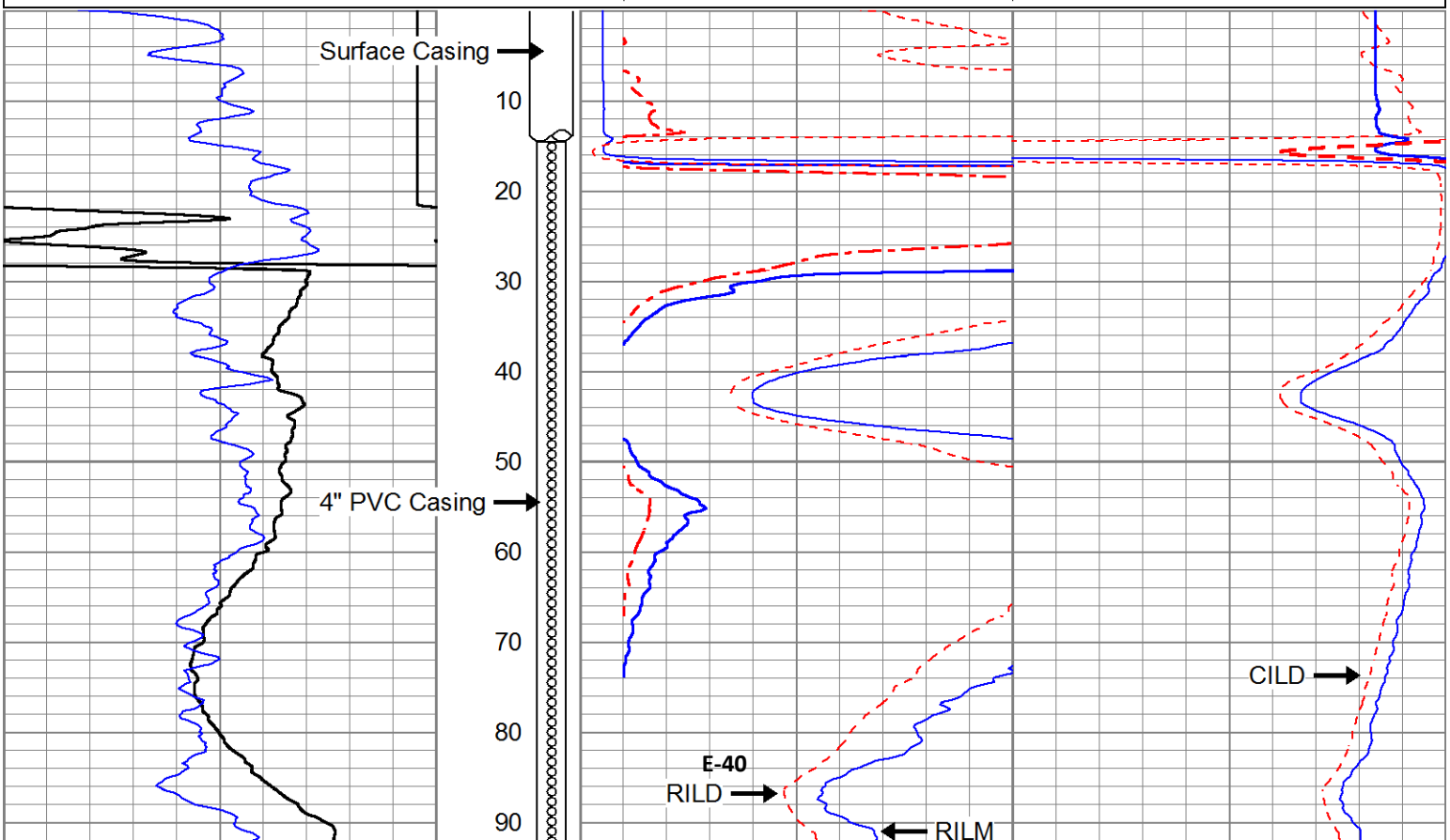

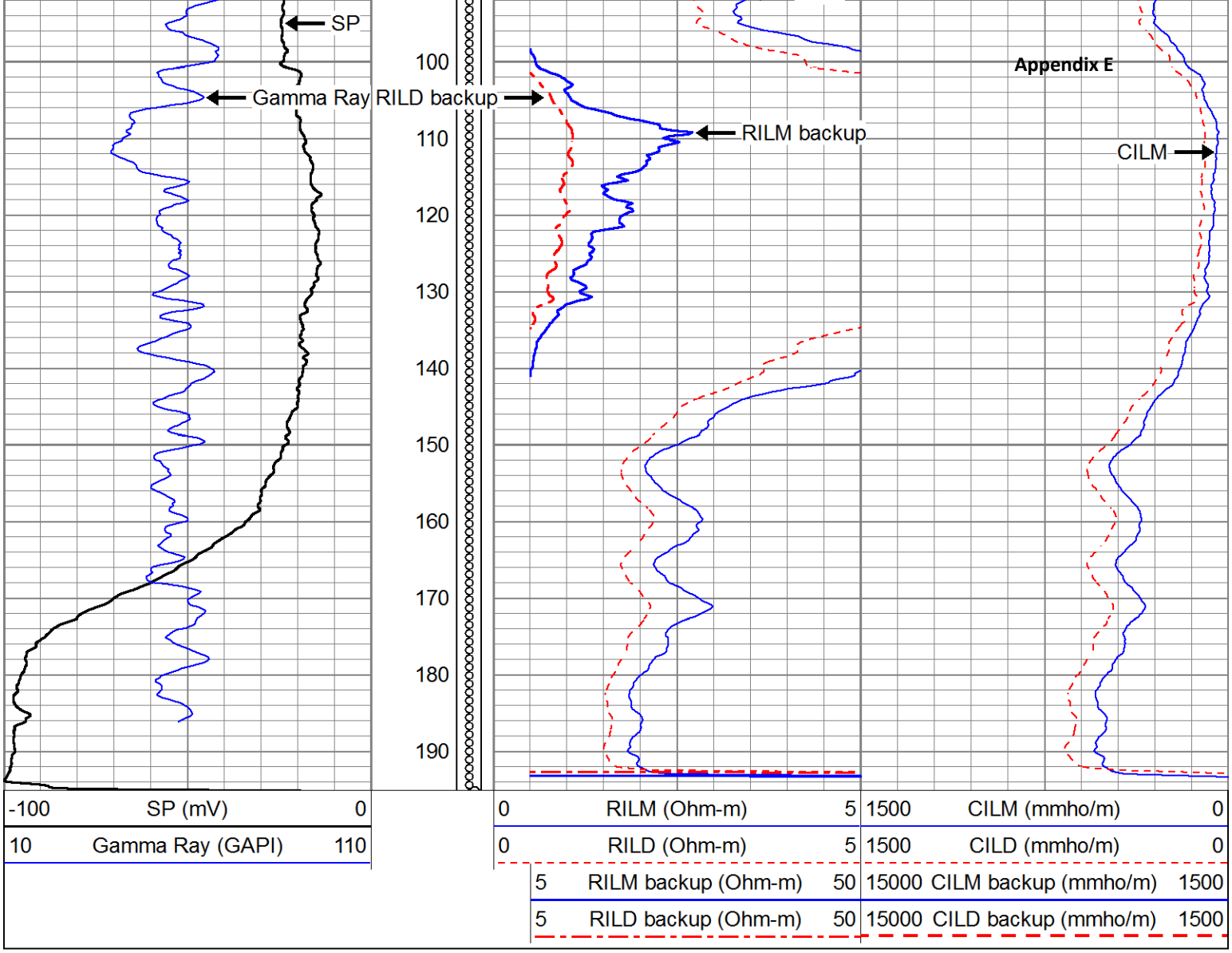

-100	SP (mV)	0	0	RILM (Ohm-m)	5	1500	CILM (mmho/m)	0
10	Gamma Ray (GAPI)	110	0	RILD (Ohm-m)	5	1500	CILD (mmho/m)	0
			5	RILM backup (Ohm-m)	50	15000	CILM backup (mmho/m)	1500
			5	RILD backup (Ohm-m)	50	15000	CILD backup (mmho/m)	1500

PACIFIC SURVEYS

DUAL INDUCTION GAMMA-RAY

Job No. 17787

File No.

Company CASCADE DRILLING

Well ML-6

Field MOSS LANDING

County MONTEREY State CA

Location

7500 SANDHOLDT RD.

Other Services:

TEMPERATURE
FLUID RESISTIVITY

Permanent Datum	G.L.	Elevation above perm. datum	Elevation K.B. D.F. G.L.
Log Measured From	G.L. 0'		
Drilling Measured From	G.L.		

Date	11-20-2013
Run Number	ONE
Depth Driller	199.6'
Depth Logger	199.6'
Bottom Logged Interval	196.5'
Top Log Interval	0'
Open Hole Size	8"
Type Fluid	WATER
Density / Viscosity	N/A
Fluid Level	10'
Bentonite Seal	N/A
Time Well Ready	1415
Time Logger on Bottom	1430
Equipment Number	PS-7
Location	LA
Recorded By	SCHUMACHER
Witnessed By	N. REYNOLDS

Borehole Record				Tubing Record			
Run Number	Bit	From	To	Size	Weight	From	To
ONE	8"	0'	200'				

Casing Record	Size	Wgt/Ft	Top	Bottom
Surface String	8"	N/A	0'	15'
Prot. String				
Production String	4" PVC	SCH 40	0'	200'
Liner				

<<< Fold Here >>>

All interpretations are opinions based on inferences from electrical or other measurements and Pacific Surveys cannot and do not guarantee the accuracy or correctness of any interpretation, and we shall not, except in the case of gross or willful negligence on our part, be liable or responsible for any loss, costs, damages, or expenses incurred or sustained by anyone resulting from any interpretation made by any of our officers, agents or employees. These interpretations are also subject to Pacific Surveys' general terms and conditions set out in our current Price Schedule.

Comments

NOTE: 0.010" SLOT FOR LENGTH OF PVC

Calibration Report

Database File 17787.db
Dataset Pathname dil2
Dataset Creation Wed Nov 20 15:33:46 2013

Dual Induction Calibration Report

Serial-Model: 0001-ALT
Surface Cal Performed:

Appendix E

Loop:	Readings Air	Readings Loop		References Air	References Loop		Results m	Results b
Deep	1440.330	3755.270	cps	0.000	612.000	mmho/m	0.264	-380.779
Medium	1967.190	14170.100	cps	0.000	1960.000	mmho/m	0.161	-315.965

Gamma Ray Calibration Report

Serial Number:	PS_1	
Tool Model:	01	
Performed:	Wed Sep 19 16:56:13 2012	
Calibrator Value:	162.0	GAPI
Background Reading:	46.1	cps
Calibrator Reading:	180.8	cps
Sensitivity:	1.2020	GAPI/cps

Database File	17787.db
Dataset Pathname	dil2
Presentation Format	dil_ps
Dataset Creation	Wed Nov 20 15:33:46 2013
Charted by	Depth in Feet scaled 1:120

-40	SP (mV)	60	0	RILM (Ohm-m)	5	1500	CILM (mmho/m)	0
10	Gamma-Ray (GAPI)	110	0	RILD (Ohm-m)	5	1500	CILD (mmho/m)	0
			5	RILM backup (Ohm-m)	50	15000	CILM backup (mmho/m)	1500
			5	RILD backup (Ohm-m)	50	15000	CILD backup (mmho/m)	1500

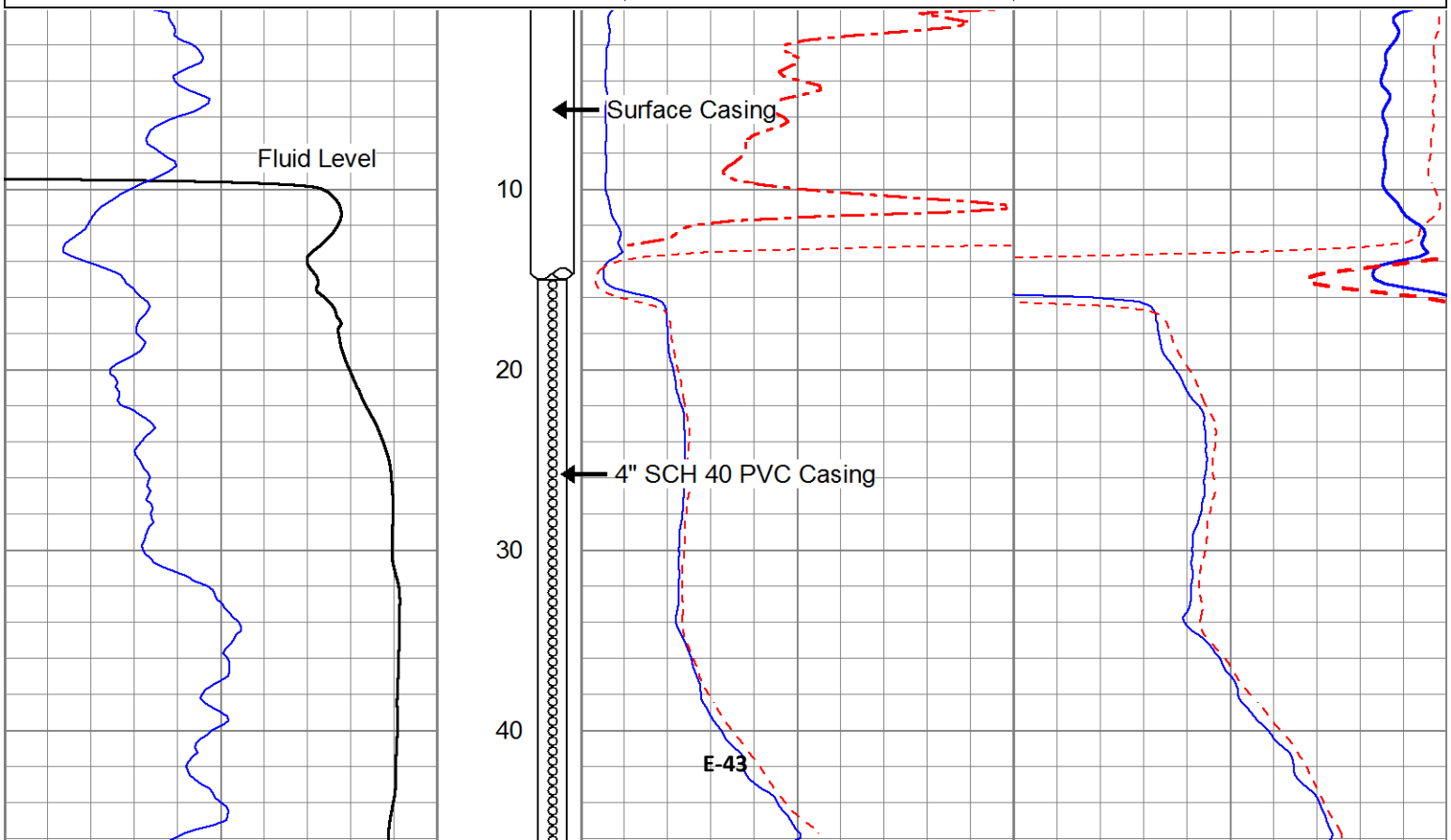

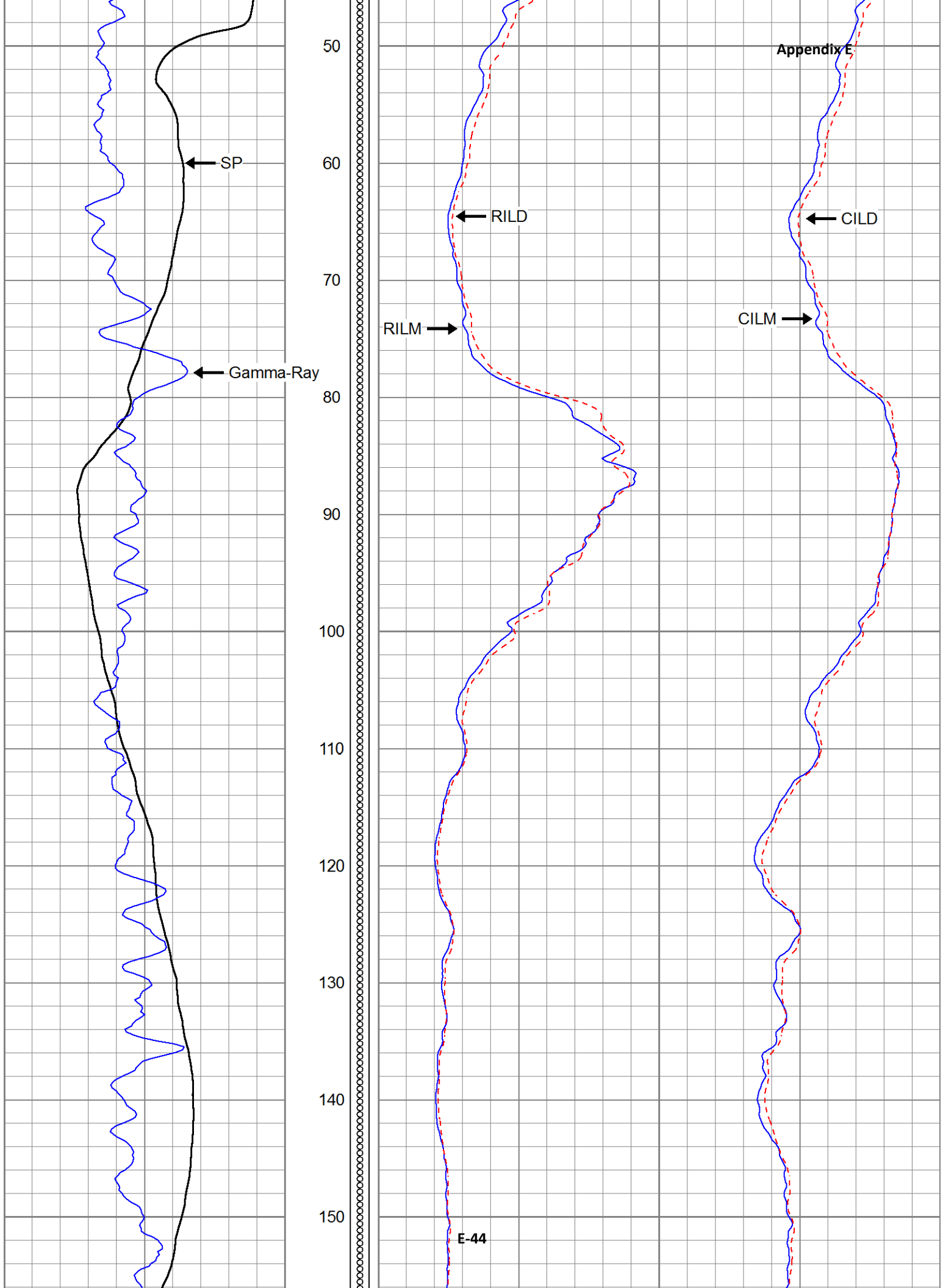
SP
Gamma-Ray
RILD
RILM
CILD
CILM
50
60
70
80
90
100
110
120
130
140
150

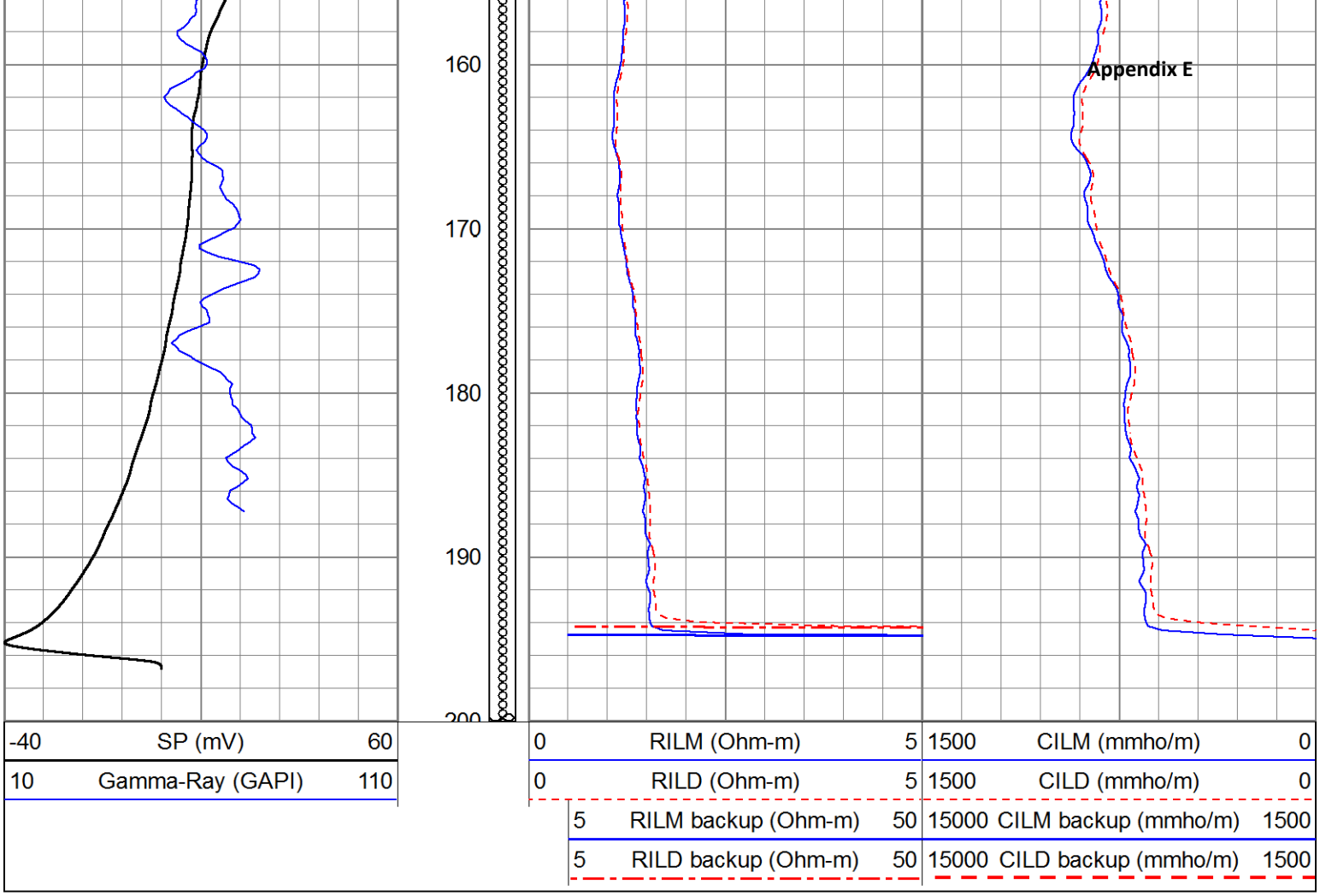

-40 SP (mV) 60	0 RILM (Ohm-m) 5	1500 CILM (mmho/m) 0
10 Gamma-Ray (GAPI) 110	0 RILD (Ohm-m) 5	1500 CILD (mmho/m) 0
	5 RILM backup (Ohm-m) 50	15000 CILM backup (mmho/m) 1500
	5 RILD backup (Ohm-m) 50	15000 CILD backup (mmho/m) 1500

PACIFIC SURVEYS

DUAL INDUCTION GAMMA-RAY

Job No. 17689

File No.

Company CASCADE DRILLING, INC.

Well PR-1

Field MOSS LANDING

County MONTEREY State CA

Location

POTRERO RD
GPS: N36o 47.439' W121o 47.509'

Other Services:

TEMPERATURE
FLUID RESISTIVITY

			Elevation
Permanent Datum	G.L.	Elevation above perm. datum	K.B.
Log Measured From	G.L. 0'		D.F.
Drilling Measured From	G.L.		G.L.

Date	9-23-2013
Run Number	ONE
Depth Driller	200'
Depth Logger	200'
Bottom Logged Interval	200'
Top Log Interval	0'
Open Hole Size	8"
Type Fluid	N/A
Density / Viscosity	N/A
Fluid Level	N/A
Bentonite Seal	N/A
Time Well Ready	10:15
Time Logger on Bottom	10:30
Equipment Number	PS-3
Location	LA
Recorded By	WATKINS
Witnessed By	B. VILLALOBOS

Borehole Record				Tubing Record			
Run Number	Bit	From	To	Size	Weight	From	To
ONE	8"	0'	200'				

Casing Record	Size	Wgt/Ft	Top	Bottom
Surface String	9"	N/A	0'	10'
Prot. String	4"	N/A	0'	200'
Production String				
Liner				

<<< Fold Here >>>

All interpretations are opinions based on inferences from electrical or other measurements and Pacific Surveys cannot and do not guarantee the accuracy or correctness of any interpretation, and we shall not, except in the case of gross or willful negligence on our part, be liable or responsible for any loss, costs, damages, or expenses incurred or sustained by anyone resulting from any interpretation made by any of our officers, agents or employees. These interpretations are also subject to Pacific Surveys' general terms and conditions set out in our current Price Schedule.

Comments

0.010" SLOT FROM 10-180' BGS

Calibration Report

Database File 17689.db
Dataset Pathname dil
Dataset Creation Mon Sep 23 10:40:26 2013

Dual Induction Calibration Report

Serial-Model: 0001-ALT
Surface Cal Performed:

Loop:	Readings Air	Readings Loop		References Air	References Loop		Results m	Results b
Deep	1407.490	3493.640	cps	0.000	612.000	mmho/m	0.293	-412.905
Medium	1908.120	14487.900	cps	0.000	1960.000	mmho/m	0.156	-297.296

Gamma Ray Calibration Report

Serial Number:	PS_1	
Tool Model:	01	
Performed:	Wed Aug 31 18:22:13 2011	
Calibrator Value:	162.0	GAPI
Background Reading:	46.1	cps
Calibrator Reading:	180.8	cps
Sensitivity:	1.2020	GAPI/cps

Database File	17689.db
Dataset Pathname	dil
Presentation Format	dil_ps
Dataset Creation	Mon Sep 23 10:40:26 2013
Charted by	Depth in Feet scaled 1:120

100	SP (mV)	200	0	RILM (Ohm-m)	5	1500	CILM (mmho/m)	0
10	Gamma Ray (GAPI)	110	0	RILD (Ohm-m)	5	1500	CILD (mmho/m)	0
			5	RILM backup (Ohm-m)	50	15000	CILM backup (mmho/m)	1500
			5	RILD backup (Ohm-m)	50	15000	CILD backup (mmho/m)	1500

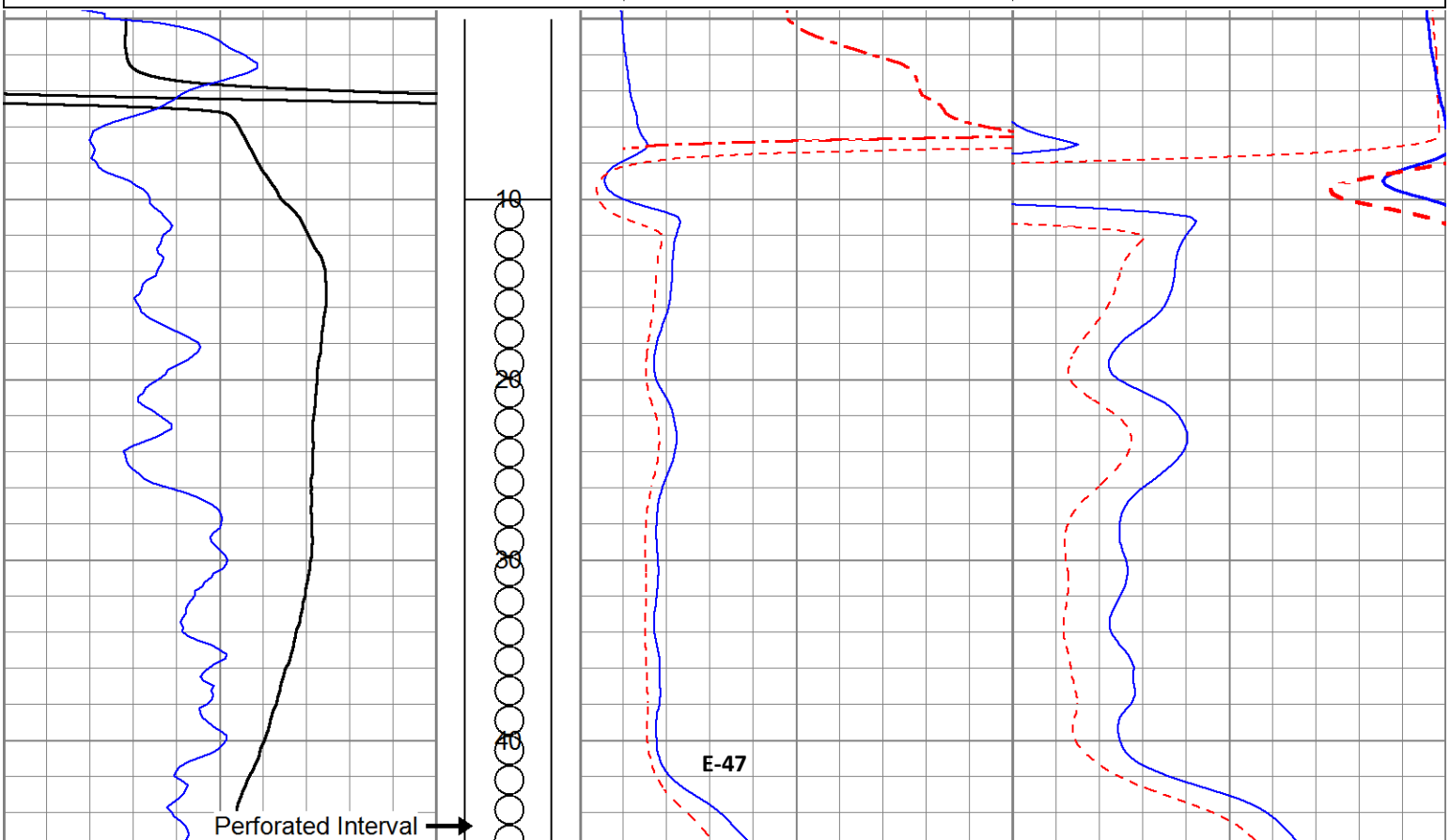

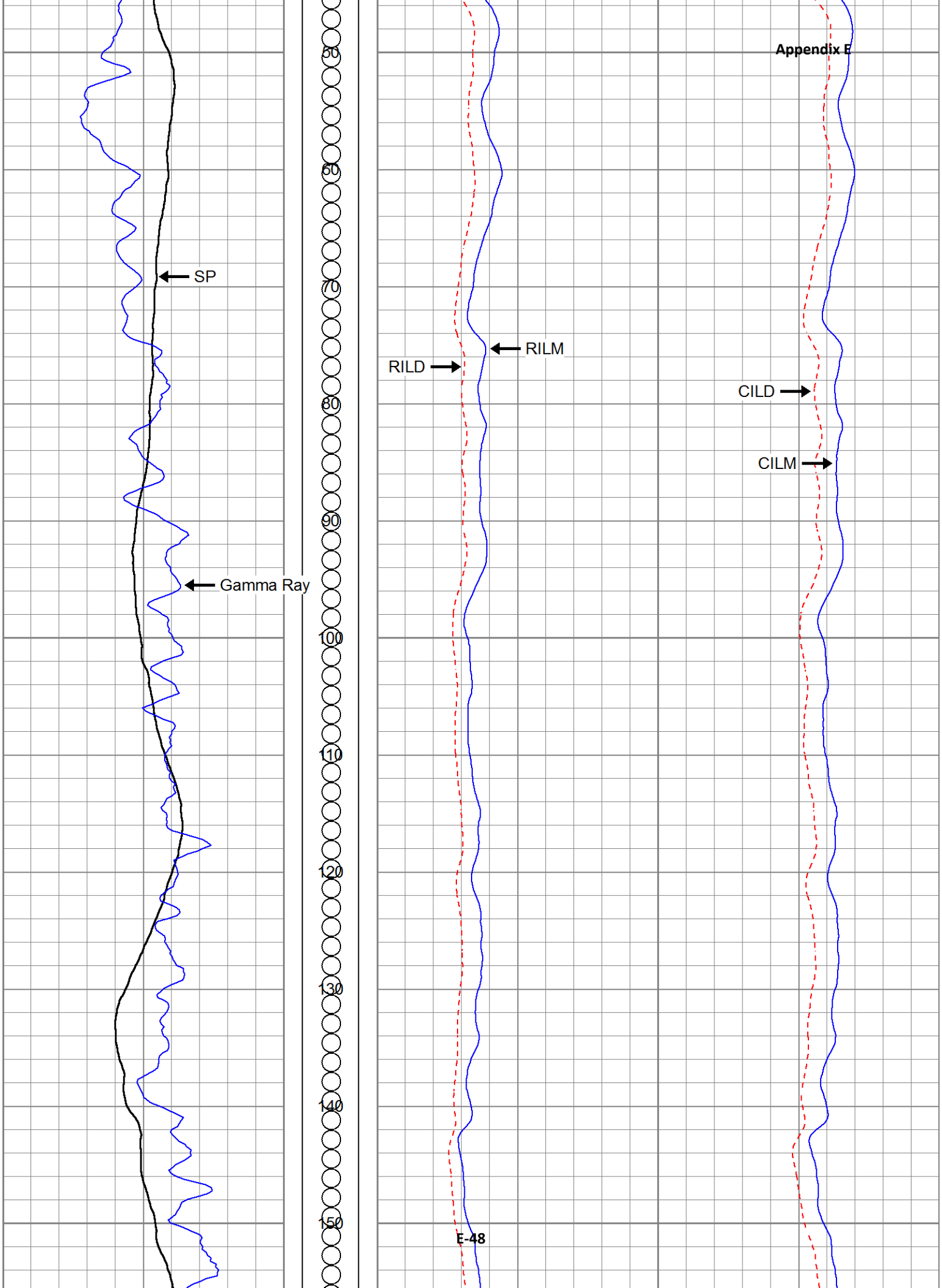
50
60
70
80
90
100
110
120
130
140
150
SP
Gamma Ray
RILM
RILD
CILD
CILM

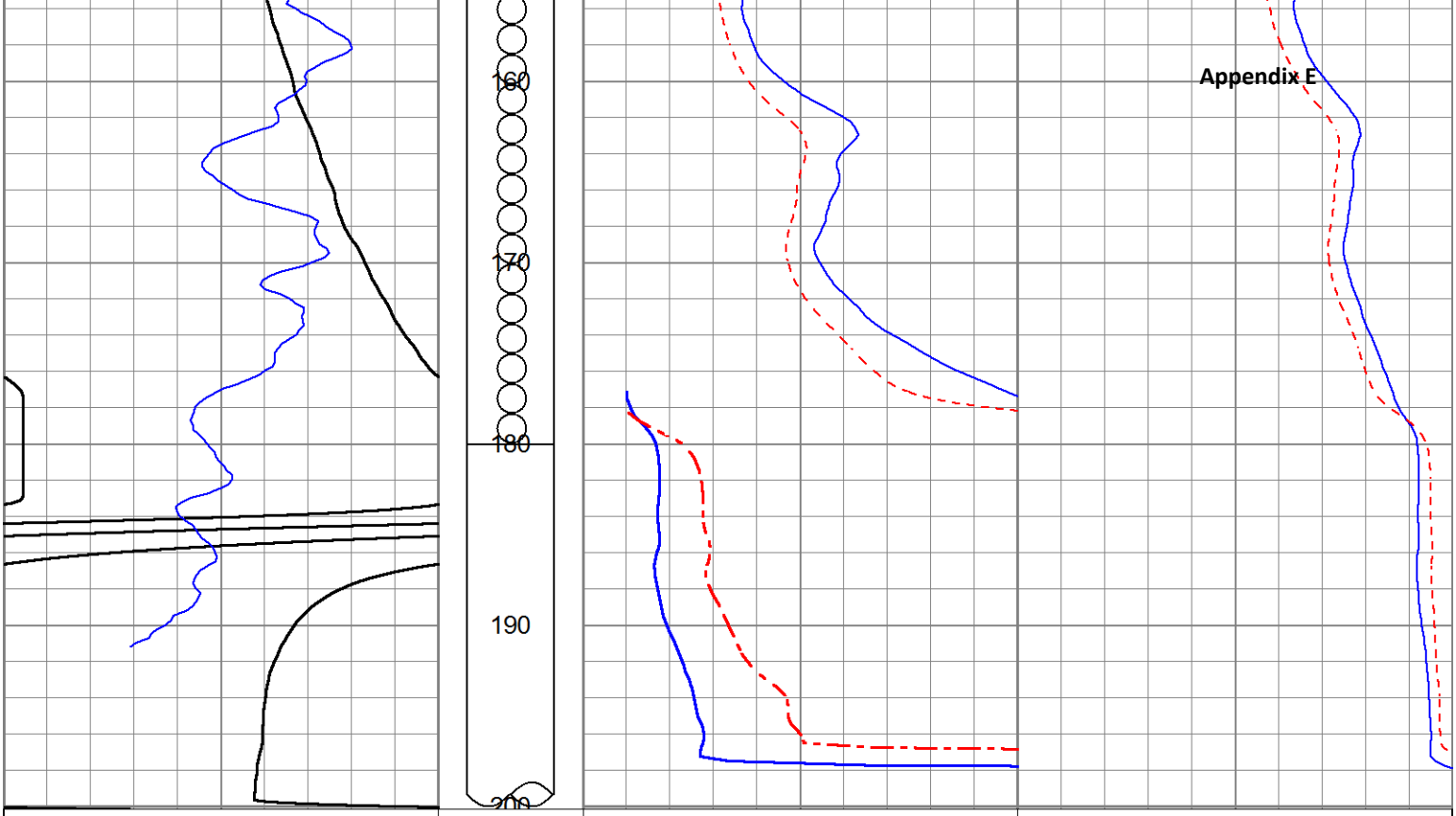

100	SP (mV)	200
10	Gamma Ray (GAPI)	110

0	RILM (Ohm-m)	5	1500	CILM (mmho/m)	0
0	RILD (Ohm-m)	5	1500	CILD (mmho/m)	0
5	RILM backup (Ohm-m)	50	15000	CILM backup (mmho/m)	1500
5	RILD backup (Ohm-m)	50	15000	CILD backup (mmho/m)	1500

APPENDIX F

Isolated Aquifer Zones Construction Forms

And Well Sampling Data Forms

GEOSCIENCE

APPENDIX F:

ISOLATED AQUIFER ZONES CONSTRUCTION FORMS AND WELL SAMPLING DATA FORMS

CONTENTS

Description **Page**

Borehole CX-B1 ..... *F-1*

Borehole CX-B2 ..... *F-19*

Borehole CX-B4 ..... *F-28*

Borehole MDW-1 ..... *F-44*

Borehole ML-1 ..... *F-58*

Borehole ML-2 ..... *F-61*

Borehole ML-3 ..... *F-69*

Borehole ML-4 ..... *F-76*

Borehole ML-6 ..... *F-82*

Borehole PR-1 ..... *F-87*

ISOLATED AQUIFER ZONE CONSTRUCTION

Zone #1 As-Built

Zone No. 1

274 to 284 ft bgs

8" sonic casing to 263 ft bgs. Open annulus above upper bentonite seal.

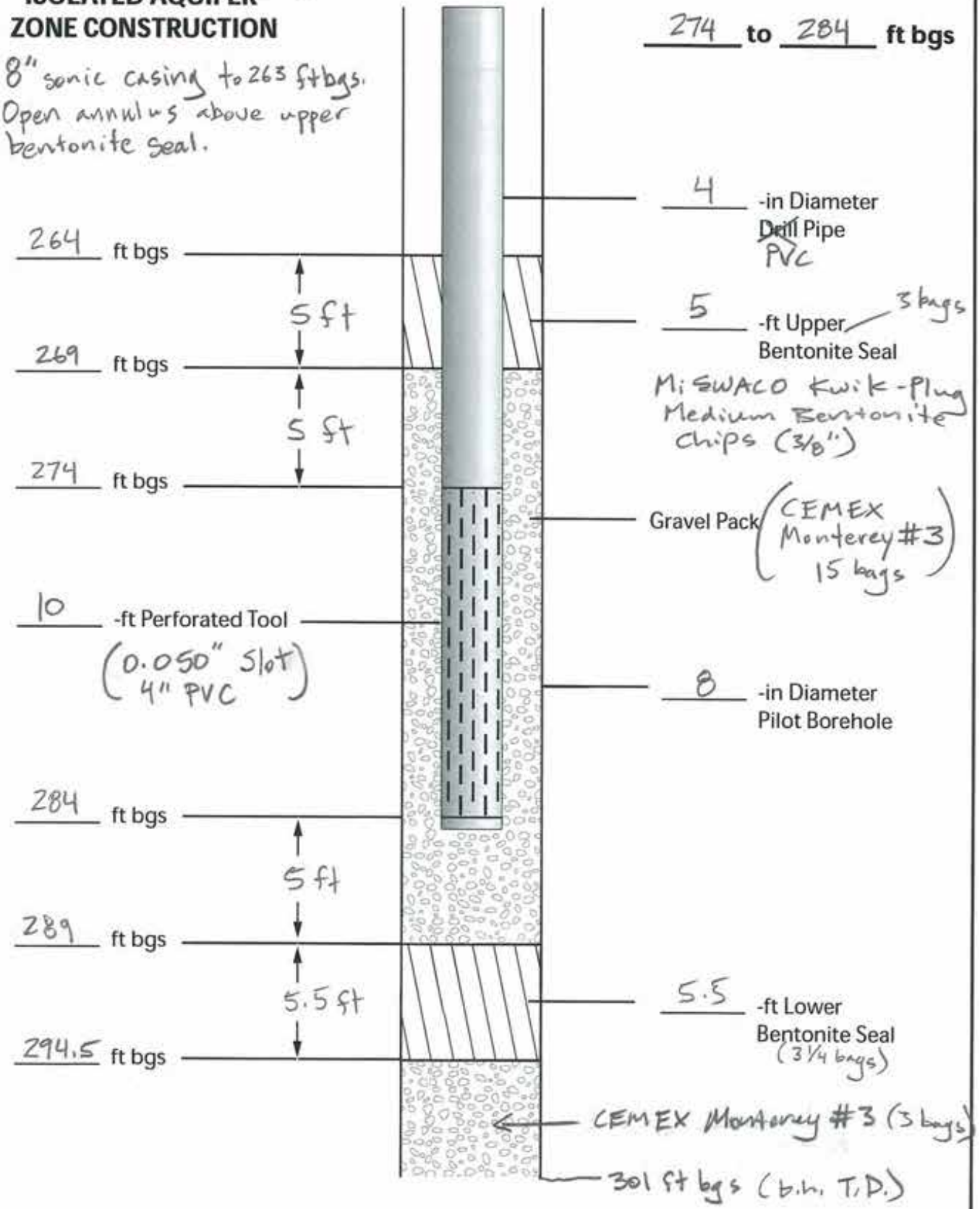

GEOSCIENCE GEOSCIENCE Support Services, Incorporated P.O. Box 220, Claremont, CA 91711 Tel: (909) 451-6650 Fax: (909) 451-6638 www.gsiwater.com	Client: RBF Consulting Inc. Well Name/Number: MPWSP Exploratory Borehole CX-B1WQ Date: 2-17-14 / Mon

Zone#2 As Built

ISOLATED AQUIFER ZONE CONSTRUCTION

Zone No. 2

237 to 247 ft bgs

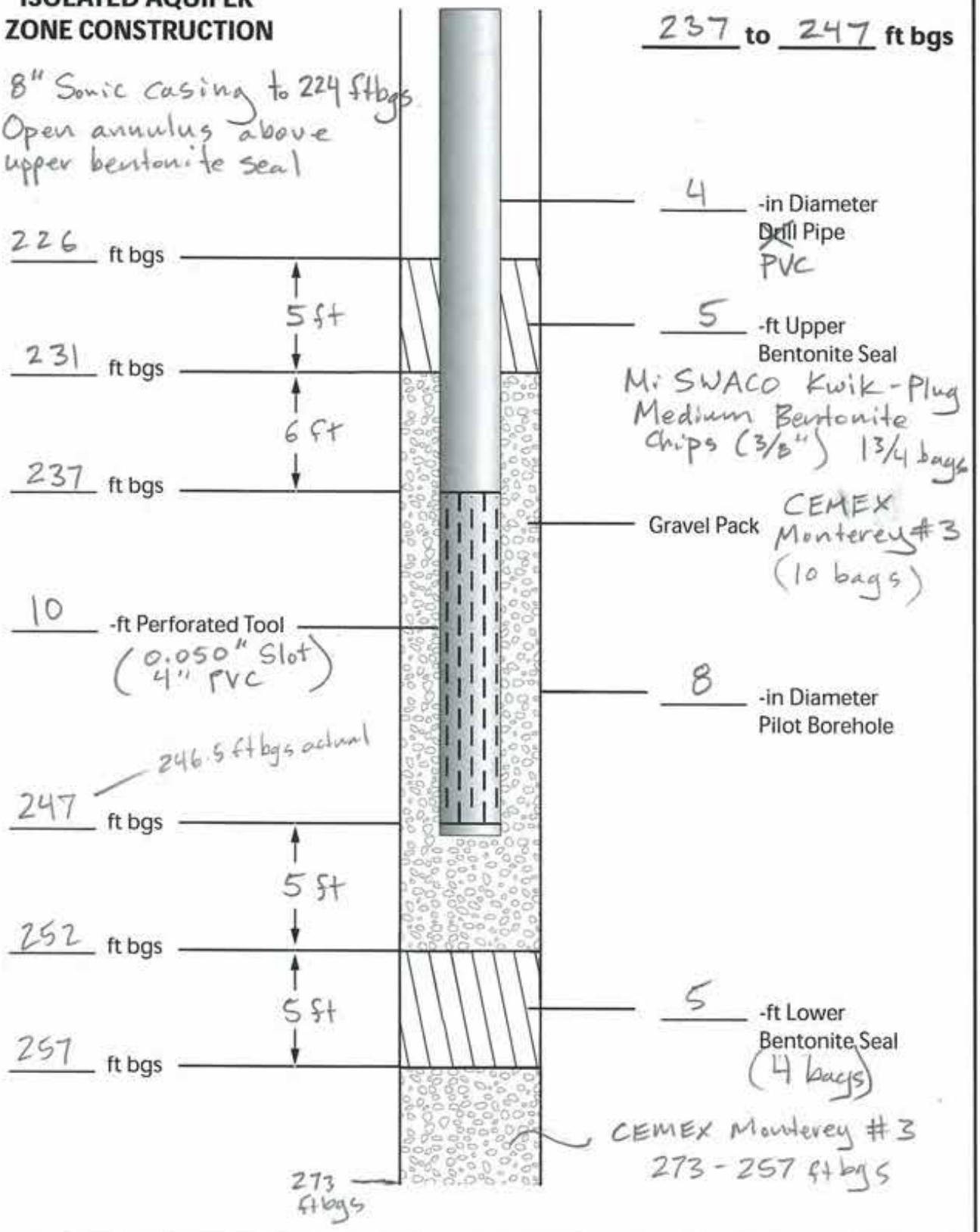

GEOSCIENCE GEOSCIENCE Support Services, Incorporated P.O. Box 220, Claremont, CA 91711 Tel: (909) 451-6650 Fax: (909) 451-6638 www.gsiwater.com	Client: RBF Consulting Inc. Well Name/Number: MPWSP Exploratory Borehole CX-B1WQ Date: 2-19-14 / Wed

ISOLATED AQUIFER ZONE CONSTRUCTION

Zone #3 As Built

Zone No. 3

182 to 192 ft bgs

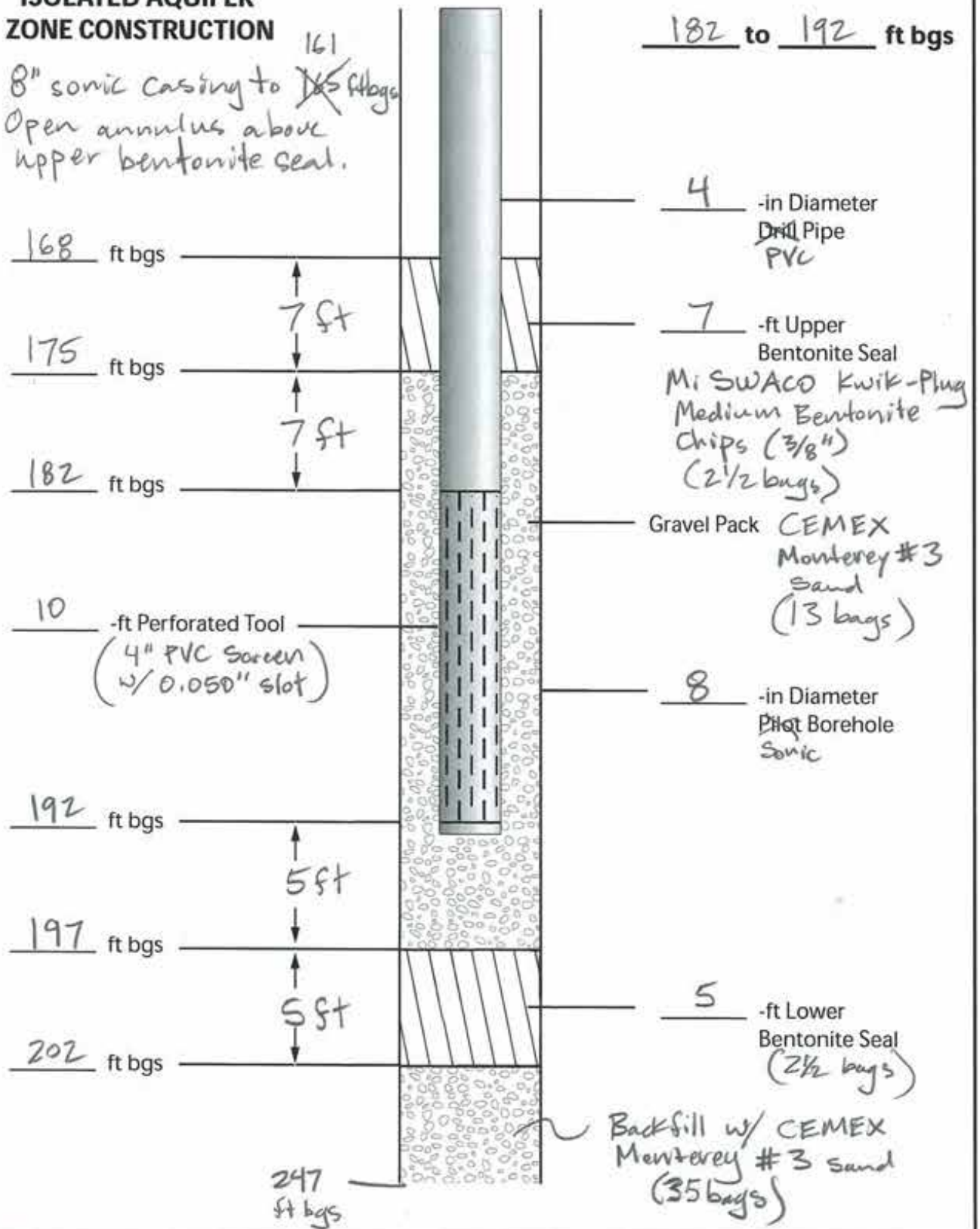

GEOSCIENCE
GEOSCIENCE Support Services, Incorporated
P.O. Box 220, Claremont, CA 91711
Tel: (909) 451-6650 Fax: (909) 451-6638
www.gsiwater.com

Client: RBF Consulting Inc.

Well Name/Number: MPWSP Exploratory Borehole CX-B1WQ

Date: 2-20-14 / Thu

Zone #4 As Built

ISOLATED AQUIFER ZONE CONSTRUCTION

Zone No. 4

134 to 144 ft bgs

8" Sonic casing to 122 ft bgs
Open annulus above upper bentonite seal.

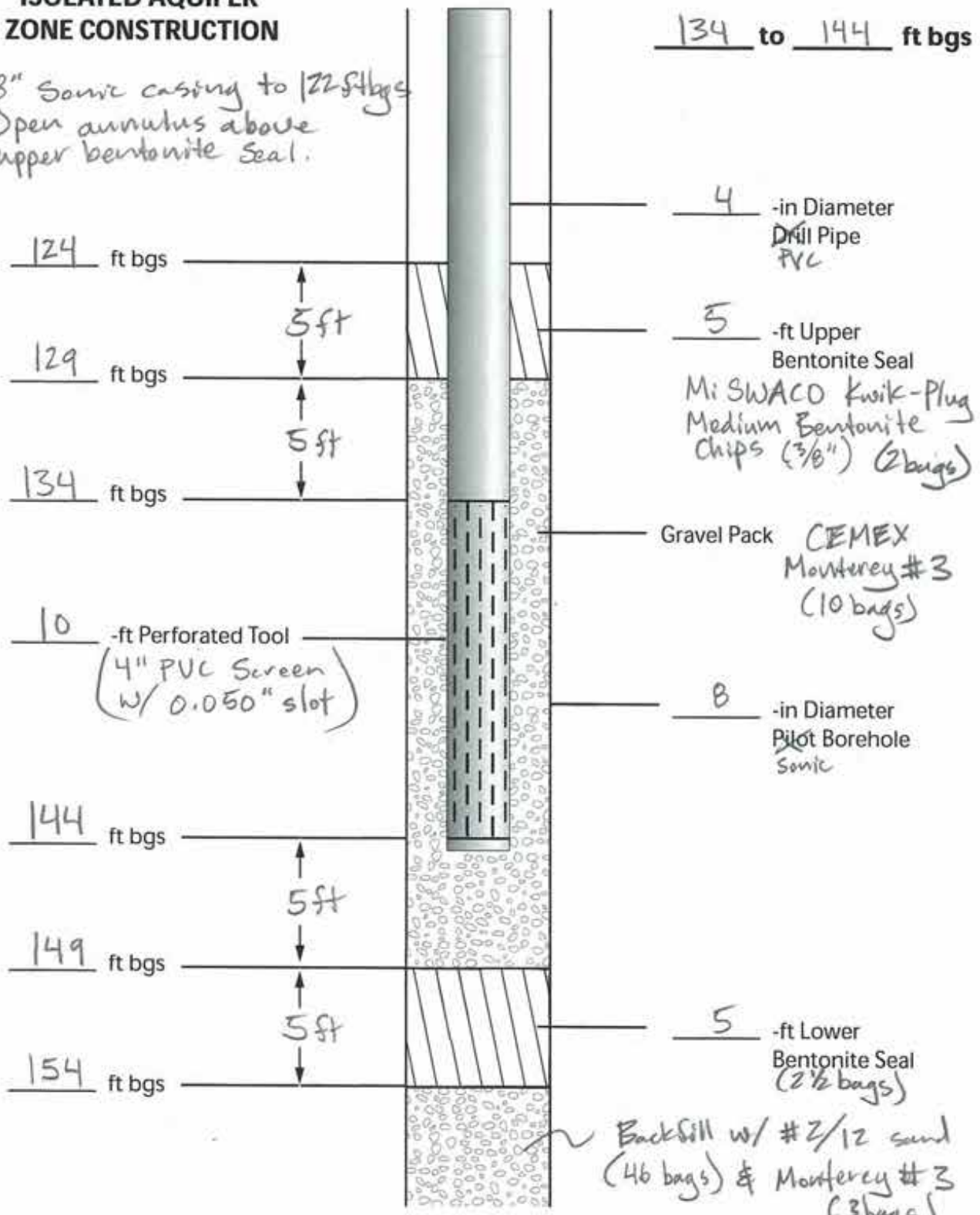

GEOSCIENCE

GEOSCIENCE Support Services, Incorporated
P.O. Box 220, Claremont, CA 91711
Tel: (909) 451-6650 Fax: (909) 451-6638
www.gsiwater.com

Client: RBF Consulting Inc.

Well Name/Number: MPWSP Exploratory Borehole CX-B1WQ

Date: 2-22-14/Sat

ISOLATED AQUIFER ZONE CONSTRUCTION

Zone #5 As Built **Zone No.** 5

84 to 94 ft bgs

8" Sonic casing to 73 ft bgs. Open annulus above upper bentonite seal.

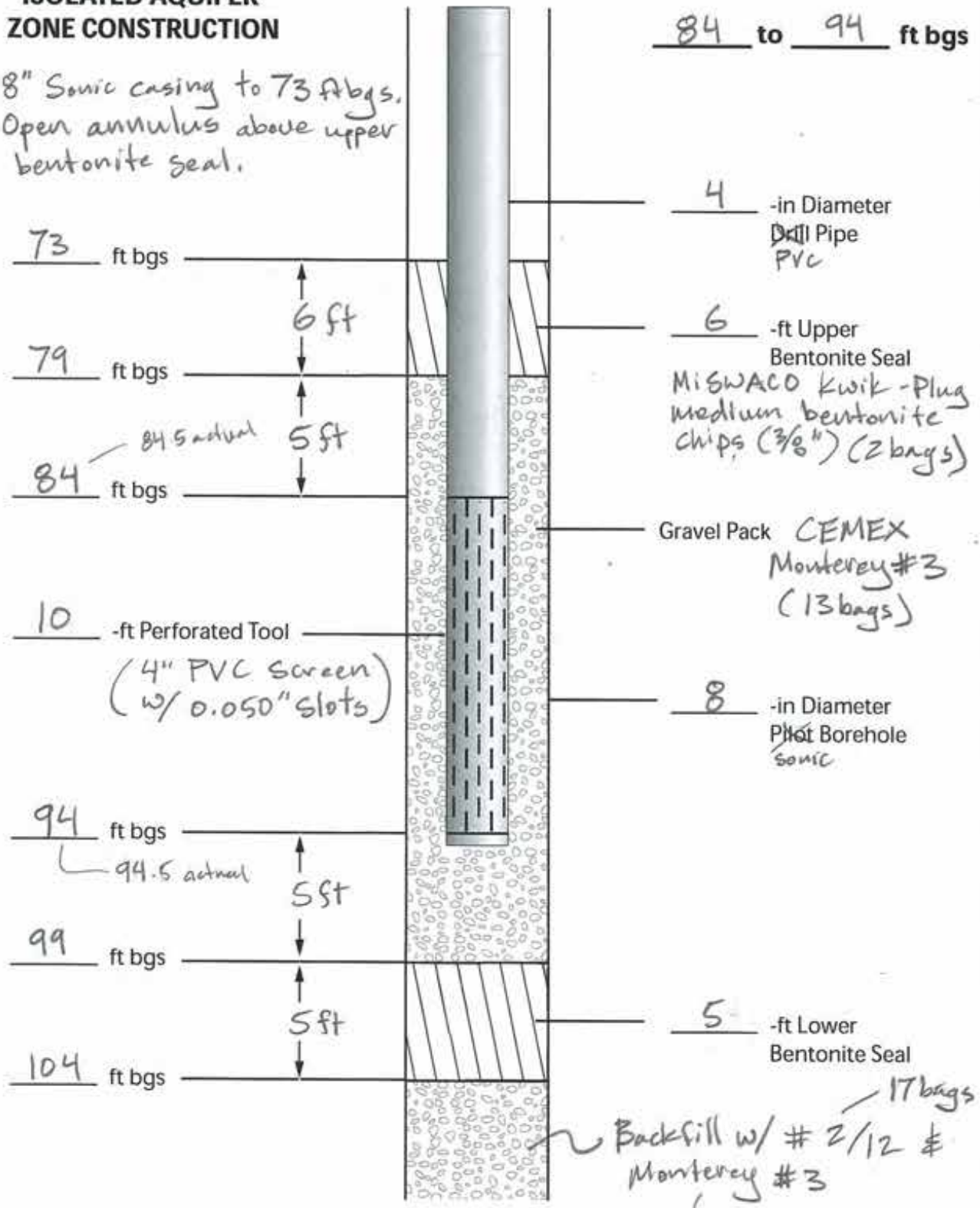

GEOSCIENCE

GEOSCIENCE Support Services, Incorporated
P.O. Box 220, Claremont, CA 91711
Tel: (909) 451-6650 Fax: (909) 451-6638
www.gsiwater.com

Client: RBF Consulting Inc.

Well Name/Number: MPWSP Exploratory Borehole CX-B1WQ

Date: 2-23-14 / Sun

Zone #6 As Built

ISOLATED AQUIFER ZONE CONSTRUCTION

Zone No. 6

51 to 61 ft bgs

9" Sonic casing to 34 ft bgs
Open annulus above upper bentonite seal.

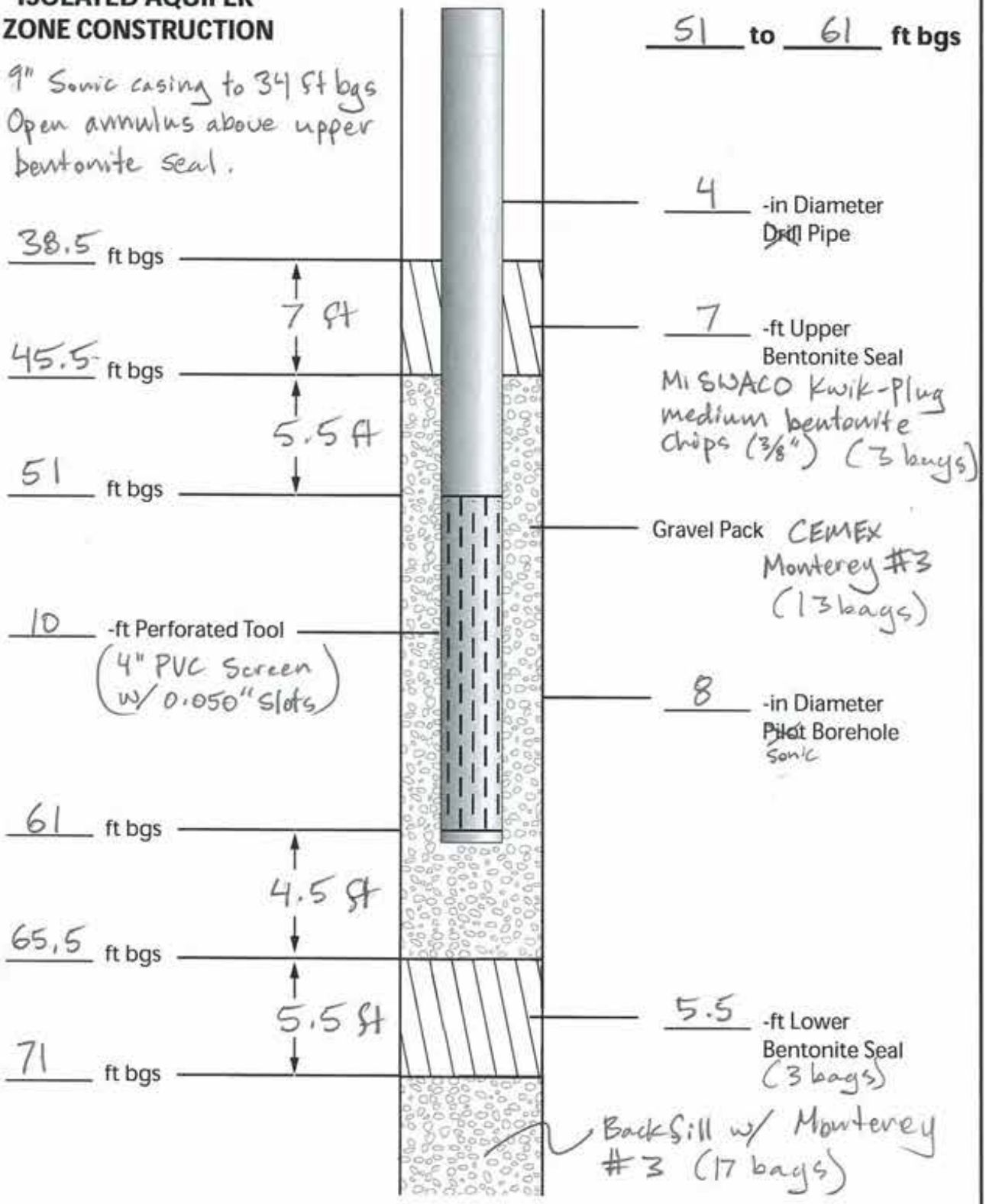

GEOSCIENCE

GEOSCIENCE Support Services, Incorporated
P.O. Box 220, Claremont, CA 91711
Tel: (909) 451-6650 Fax: (909) 451-6638
www.gsiwater.com

Client: RBF Consulting Inc.

Well Name/Number: MPWSP Exploratory Borehole CX-B1WQ

Date: 2-24-14 / Mon

GEOSCIENCE

GEOSCIENCE Support Services, Inc.
P.O. Box 220, Claremont, CA 91711
Tel: (909) 451-6650 Fax: (909) 451-6638
www.gssiwater.com

CONFIDENTIAL
DRAFT
Subject to Revision

ISOLATED AQUIFER ZONE SAMPLING DATA SHEET

Zone No. 1

Client: RBF/MPWSP - Exploratory Borehole Drilling
Borehole Name/Number: CX-B1WQ
Sonic Casing Dia: 8 in Sonic Casing Depth: 263 ft bgs
Static WL: 21.0 ft brp
RP: 8.0 ft ags (Top of 8" casing)

Logged By: N. Reynolds (GSSI) & Cascade Drilling W.L.'s
Test Date: 2-17-14/Mon
Screened Interval: 274-284 ft bgs
Reference Point Elevation: _____ ft amsl
Pump Depth: 212 ft bgs 0.68 Constant

Time	Time Step (min)	Water Level (ft brp)	Drawdown (ft)	Totalizer (gal)	Pumping Rate (gpm)	Temp (°C)	DO (mg/L)	Specific Cond. (µS/cm)	Cond. (µS/cm)	TDS (mg/L)	pH	ORP (mV)	Turbitity (NTU)
16:22:14	0	21.0	0	64079.5	Pump on	~7.1 gpm.							
16:25	3	57.0	36.0	↑Q to 16.5 gpm									very
16:30	8	72.3	51.3	64143.4	17.5	18.9	0.6	14000	12693	10111.6	7.13	-131.1	turbid
16:36	14	67.4	46.4		16:36:30 ↑Q to ~19.1 gpm, Turb improving some.								
16:40	18	↑Q slightly.		to 19.6 gpm									
16:43	21	90.0	69.0	64338.7	19.6	19.5	0.8	36690	32843	24996.8	6.66	-109.6	"over range"
16:49	27	88.7	67.7	64457.3	19.8	19.4	0.7	37156	33211	25268.8	6.62	-108.7	529
16:53:35	31	Pump off.		64546.0								water is aerated.	
		Total Volume pumped today =			466.5 gallons.								

Stabilization Criteria:

3 to 5 minute recordings with 3 consecutive readings within:

pH: +/- 0.1 unit
Cond: +/- 3%
ORP: +/- 10 mV
Turb: +/- 10%
DO: +/- 10%
Desired Flow Rate: 100 to 500 mL/min

Form Created: 29-Sep-13

GEOSCIENCE
GEOSCIENCE Support Services, Inc.
P.O. Box 220, Claremont, CA 91711
Tel: (909) 451-6650 Fax: (909) 451-6638
www.gssiwater.com

CONFIDENTIAL
DRAFT
Subject to Revision

ISOLATED AQUIFER ZONE SAMPLING DATA SHEET

Zone No. 1

Client: RBF/MPWSP - Exploratory Borehole Drilling

Borehole Name/Number: CX-B1WQ

Sonic Casing Dia: 8 in Sonic Casing Depth: 263 ft bgs

Static WL: 34.0 ft brp

RP: 8.0 ft agl (top of 8" casing)

W.L.'s taken w/ an electronic W.L. indicator.

Logged By: N. Reynolds (GSI) & Cascade Drilling

Test Date: 2-18-14 / Tue

Screened Interval: 274 - 284 ft bgs

Reference Point Elevation: _____ ft amsl

Pump Depth: 212 ft bgs

W.L.'s

0.68 constant

Time	Time Step (min)	Water Level (ft brp)	Drawdown (ft)	Totalizer (gal)	Pumping Rate (gpm)	Temp (°C)	DO (mg/L)	Specific Cond. (µS/cm)	Cond. (µS/cm)	TDS (mg/L)	pH	ORP (mV)	Turbitity (NTU)
08:01:02	0	34.0	0	64545.1	Pump on @ 31.4 gpm								
08:03	2	88.6	54.6	↓Q to	21.5 gpm								
08:06	5	84.4	50.4										
08:27	26	85.0	51.0	65128.5	21.7								6.52
08:31:41	~31			↑Q to ~	38.5 gpm								
08:36	35	119.5	85.5		38.5	08:37	↑Q to	39.8 gpm					
08:41	40	119.5	85.5	65571.0	40.2								105
09:20	79	114.6	80.6	67147.8	40.4	19.0	2.5	36509	32312	24820	6.51	96.1	11.7
09:30	89	114.9	80.9	67553.5	40.6	19.0	1.0	36353	32175	24718	6.56	57.6	9.04
09:40	99	114.7	80.7	67959.8	40.6	19.0	1.0	36524	32331	24840.4	6.55	48.6	4.40
09:50	109	114.6	80.6	68365.5	40.6	19.0	1.0	36505	32317	24826.8	6.55	47.6	4.08
10:00	119	114.8	80.8	68771.4	40.6	19.0	1.0	36488	32336	24799.6	6.55	49.0	3.43
10:10	129	114.5	80.5	69177.0	40.6	19.0	1.0	36512	32357	24820.0	6.55	50.6	2.82
10:20	139	115.0	81.0	69583.0	40.6	19.0	1.0	36535	32367	24847.2	6.55	51.7	1.98
10:30	149	115.2	81.2	69990.6	40.8	19.0	1.0	36527	32377	24833.6	6.55	53.8	3.36
10:40	159	115.1	81.1	70398.1	40.8	19.0	1.0	36540	32335	24847.2	6.55	54.6	2.23
10:50	169	115.2	81.2	70805.6	40.8	19.0	1.0	36553	32365	24854	6.55	55.4	0.92
11:00	179	115.17	81.17	71213.3	40.8	19.0	1.0	36564	32364	24860.8	6.54	56.4	0.94
11:10	189	115.1	81.1	71621.8	40.9	19.0	1.0	36570	32374	24867.6	6.54	57.3	0.88
11:20	199	114.95	80.95	72029.2	40.7	19.0	1.0	36567	32379	24867.6	6.54	58.1	0.89

Stabilization Criteria:

3 to 5 minute recordings with 3 consecutive readings within:

pH: +/- 0.1 unit
Cond: +/- 3%
ORP: +/- 10 mV
Turb: +/- 10%
DO: +/- 10%

Flow thru cell = 1548 mL/min

Desired Flow Rate: 100 to 500 mL/min

Form Created: 29-Sep-13

GEOSCIENCE

GEOSCIENCE Support Services, Inc.
P.O. Box 220, Claremont, CA 91711
Tel: (909) 451-6650 Fax: (909) 451-6638
www.gssiwater.com

CONFIDENTIAL
DRAFT
Subject to Revision

ISOLATED AQUIFER ZONE SAMPLING DATA SHEET

Zone No. 1 (W.L.'s)

Client: RBF/MPWSP - Exploratory Borehole Drilling
Borehole Name/Number: CX-B1WQ
Sonic Casing Dia: 8 in Sonic Casing Depth: 263 ft bgs
Static WL: 34.0 ft brp
RP: 8.0 ft ags

Logged By: N. Reynolds (GSSI) & Cascade Drilling
Test Date: 2-18-14 / Tue
Screened Interval: 274 - 284 ft bgs
Reference Point Elevation: _____ ft amsl
Pump Depth: 212 ft bgs

Time	Time Step (min)	Water Level (ft brp)	Drawdown (ft)	Totalizer (gal)	Pumping Rate (gpm)	Temp (°C)	DO (mg/L)	Specific Cond. (µS/cm)	Cond. (µS/cm)	TDS (mg/L) (0.68 constant)	pH	ORP (mV)	Turbitity (NTU)
11:30	209	115.3	81.3	72436.6	40.7	19.0	1.0	36566	32377	24867.6	6.54	58.6	0.93
11:40	219	114.9	80.9	72844.4	40.8	19.0	1.0	36581	32394	24874.4	6.54	59.2	1.49
11:50	229	114.8	80.8	73251.8	40.7	18.9	1.0	36581	32350	24874.4	6.54	59.9	1.20
12:00	239	115.1	81.1	73659.1	40.7	18.9	1.0	36608	32359	24888.0	6.54	60.5	1.16
12:10	249	115.0	81.0	74066.2	40.7	18.9	1.0	36601	32361	24888.0	6.54	61.1	0.57
12:15	Begin collecting zone #1 WQ samples for lab analysis.												
12:39	278	114.72	80.72	75248.9	40.8	18.9	1.0	36635	32402	24908.4	6.54	62.2	0.56
12:42:07	281			75374.2	Pump off.								
		Total volume pumped today =				10,829.1 gallons							
13:35	334	34.2	0.2	W.L. after pulling pump.									

Stabilization Criteria:

3 to 5 minute recordings with 3 consecutive readings within:

pH: +/- 0.1 unit
Cond: +/- 3%
ORP: +/- 10 mV
Turb: +/- 10%
DO: +/- 10%
Desired Flow Rate: 100 to 500 mL/min

Form Created: 29-Sep-13

GEOSCIENCE

GEOSCIENCE Support Services, Inc.
P.O. Box 220, Claremont, CA 91711
Tel: (909) 451-6650 Fax: (909) 451-6638
www.gssiwater.com

CONFIDENTIAL
DRAFT
Subject to Revision

ISOLATED AQUIFER ZONE SAMPLING DATA SHEET

Zone No. 2

Client: RBF/MPWSP - Exploratory Borehole Drilling

Borehole Name/Number: CX-B1WQ

Sonic Casing Dia: 8 in

Sonic Casing Depth: 224 ft bgs

Static WL: _____ ft brp

RP: 6.0 ft ags (Top of 8" casing)

W.L.'s taken w/ an electronic W.L. indicator

Note: SWL was 45 days prior to pumping. Recovered W.L. was not recorded by driller on 2-20-14. est. 6 ft bgs by driller

Logged By: N. Reynolds (GSSI) & Cascade Drilling

Test Date: 2-19-14 / Wed

Screened Interval: 237-247 ft bgs

Reference Point Elevation: _____ ft amsl

Pump Depth: 199 ft bgs to pump intake

0.68 constant

W.L.'s

Time	Time Step (min)	Water Level (ft brp)	Drawdown (ft)	Totalizer (gal)	Pumping Rate (gpm)	Temp (°C)	DO (mg/L)	Specific Cond. (µS/cm)	Cond. (µS/cm)	TDS (mg/L)	pH	ORP (mV)	Turbitity (NTU)	Total Gallons
10:35:13	0			75374.1	Pump on @ 27 gpm. ↓Q @ 10:36:30 to 22gpm ↓Q@10:38 to 13									gpm
10:40	5	147.63			13.0	↓Q @ 10:41 to 10.3 gpm. Turbid.								
10:45	10	122.3		75520.7	~10.3								turbid	
10:55	20	108.6		75622.2	10.2	Discharge is aerated.							"over range"	
11:10	35	108.82		75778.8	10.4	"		"					530	
11:25	50	108.37		75936.1	10.5	"		"					196	
11:35	60	110.0		76042.4	10.6	18.9	1.1	21571	19051	14681.2	6.71	-13.9	150	
11:45	70	110.6		76150.7	10.8	18.9	1.1	21776	19254	14817.2	6.77	-54.6	81.4	
11:55	80	110.4		76259.0	10.8	18.9	1.1	22069	19503	15014.4	6.77	-58.8	53.6	884.9
12:05	90	110.3		76367.2	10.8	18.8	1.2	22241	19623	15130.0	6.78	-59.8	52.9	
12:16	101	109.82		76486.4	10.8	18.9	1.2	22432	19803	15252.4	6.77	-58.4	45.8	
12:25	110	109.47		76583.8	10.8	18.8	1.2	22544	19879	15327.2	6.77	-56.8	31.2	
12:35	120	109.6		76692.2	10.8	18.8	1.2	22658	19973	15415.6	6.77	-54.8	37.2	1318.1
12:45	130	108.83		76800.6	10.8	18.8	1.2	22769	20069	15483.6	6.77	-52.0	20.9	
12:55	140	108.4		76908.3	10.8	18.7	1.2	22840	20121	15531.2	6.77	-49.6	17.9	
13:05	150	107.95		77016.0	10.8	18.7	1.2	22922	20184	15585.6	6.77	-46.3	14.4	1641.9
13:15	160	106.95		77122.6	10.7	18.7	1.2	23007	20261	15640.0	6.77	-43.1	14.9	
13:25	170	106.83		77228.9	10.6	18.7	1.2	23068	20308	15687.3	6.77	-40.9	14.9	
13:35	180	106.8		77334.7	10.6	18.7	1.2	23143	20374	15742.0	6.76	-38.2	12.9	
13:45	190	107.0		77440.8	10.6	18.7	1.2	23210	20429	15789.6	6.76	-36.5	12.8	

Stabilization Criteria:

3 to 5 minute recordings with 3 consecutive readings within:

pH: +/- 0.1 unit

Cond: +/- 3%

ORP: +/- 10 mV

Turb: +/- 10%

DO: +/- 10%

Desired Flow Rate: 100 to 500 mL/min

Flow thru cell = 1471 mL/min

Form Created: 29-Sep-13

GEOSCIENCE
GEOSCIENCE Support Services, Inc.
P.O. Box 220, Claremont, CA 91711
Tel: (909) 451-6650 Fax: (909) 451-6638
www.gssiwater.com

CONFIDENTIAL
DRAFT
Subject to Revision

ISOLATED AQUIFER ZONE SAMPLING DATA SHEET

Zone No. 2 W.L.'s

Client: RBF/MPWSP - Exploratory Borehole Drilling
Borehole Name/Number: CX-B1WQ
Sonic Casing Dia: 8 in Sonic Casing Depth: 224 ft bgs
Static WL: _____ ft brp
RP: 6.0 ft ags

Logged By: N. Reynolds (GSSI) & Cascade Drilling
Test Date: 2-19-14 / Wed
Screened Interval: 237-247 ft bgs
Reference Point Elevation: _____ ft amsl
Pump Depth: 199 ft bgs pump intake

Time	Time Step (min)	Water Level (ft brp)	Drawdown (ft)	Totalizer (gal)	Pumping Rate (gpm)	Temp (°C)	DO (mg/L)	Specific Cond. (µS/cm)	Cond. (µS/cm)	TDS (mg/L) 0.68 constant	pH	ORP (mV)	Turbitity (NTU)
13:55	200	107.0		77546.8	10.6	18.7	1.2	23243	20447	15810.0	6.76	-33.8	14.7
14:05	210	106.8		77652.8	10.6	18.7	1.2	23296	20485	15837.2	6.76	-31.6	14.5
14:15	220	106.6		77759.2	10.6	18.7	1.2	23326	20516	15864.4	6.76	-29.1	13.6
14:25	230	105.98		77865.7	10.7	18.7	1.2	23382	20555	15898.4	6.76	-26.3	11.6
14:35	240	106.5		77971.8	10.6	18.7	1.2	23406	20578	15912.0	6.76	-24.6	11.4
14:45	250	106.6		78078.2	10.6	18.7	1.2	23444	20606	15939.2	6.76	-22.5	10.7
14:55	260	105.7		78184.5	10.6	18.7	1.2	23466	20631	15952.8	6.76	-20.7	8.56
15:05	270	106.3		78290.7	10.6	18.7	1.2	23480	20644	15966.4	6.76	-18.8	9.23
15:15	280	106.1		78397.2	10.7	18.7	1.2	23516	20669	15986.8	6.76	-17.0	13.2
15:25	290	106.25		78503.6	10.6	18.7	1.2	23547	20700	16007.2	6.76	-15.7	13.1
15:38	303	106.2		78641.7	10.6	18.7	1.2	23592	20737	16041.2	6.76	-13.4	11.2
15:41:42	~307	↓Q to 6.3 gpm		; 15:44:24	↓Q to	5.1 gpm	; 15:46:53	↓Q to	3.3 gpm	3.08 NTU			
15:52	317	50.3		78727.2	~3.3	18.↓	1.1	23639	20744	16075.2	6.77	-21.8	1.32
16:00	325	39.8		78745.6	2.3	18.6	1.1	23660	20779	16088.8	6.79	-29.1	1.21
16:05	330	39.88		78756.7	2.2	18.7	1.0	23705	20869	16122.8	6.79	-32.4	1.20
16:10	Collect WQ samples for lab analysis. Samples placed on ice.												
16:41	366	38.5		78831.8	2.1	19.0	1.0	23926	21194	16272.4	6.80	-40.1	0.91
16:46:13	371			78841.2	Pump off.								
		Total Volume pumped = 3,467.1 gallons											

2704.1

Stabilization Criteria:

3 to 5 minute recordings with 3 consecutive readings within:

pH: +/- 0.1 unit
Cond: +/- 3%
ORP: +/- 10 mV
Turb: +/- 10%
DO: +/- 10%
Desired Flow Rate: 100 to 500 mL/min

Form Created: 29-Sep-13

GEOSCIENCE

GEOSCIENCE Support Services, Inc.
P.O. Box 220, Claremont, CA 91711
Tel: (909) 451-6650 Fax: (909) 451-6638
www.gssiwater.com

CONFIDENTIAL
DRAFT
Subject to Revision

ISOLATED AQUIFER ZONE SAMPLING DATA SHEET

Zone No. 3 W.L.'s

Client: RBF/MPWSP - Exploratory Borehole Drilling
Borehole Name/Number: CX-B1WQ
Sonic Casing Dia: 8 in Sonic Casing Depth: 161 ft bgs
Static WL: 28.2 ft brp
RP: 8.67 ftags (top of 8" casing)

Logged By: N. Reynolds (GSSI) & Cascade Drilling
Test Date: 2-21-14 / Fri
Screened Interval: 182 - 192 ft bgs
Reference Point Elevation: _____ ft amsl
Pump Depth: 168 ft bgs

0.68 constant

Time	Time Step (min)	Water Level (ft brp)	Drawdown (ft)	Totalizer (gal)	Pumping Rate (gpm)	Temp (°C)	DO (mg/L)	Specific Cond. (µS/cm)	Cond. (µS/cm)	TDS (mg/L)	pH	ORP (mV)	Turbitity (NTU)	Total Vol pumped
09:47:32	0	28.2	0	78841.1	Pump on ~ 3.1 gpm. discharge is aerated									
09:49	1	119.0	90.8	–	↓Q to 6.4 gpm		9:52 ↑Q to 8.2 gpm		Turbid and aerated. ↑Q to 10.1 gpm					
10:00	12	88.6	60.4	78988.1	10.1	aerated discharge							52.3	
10:15	27	91.5	63.3	79140.1	10.1	18.5	0.1	45664	40030	31082.8	6.75	-183.7	20.8	
10:30	42	90.6	62.4	79292.7	10.2	18.5	0.1	46385	40680	31545.2	6.78	-264.8	10.7	
10:45	57	90.0	61.8	79444.0	10.1	18.5	0.1	46650	40865	31728.8	6.77	-284.2	17.6	602.9
11:00	72	89.9	61.7	79594.9	10.1	18.5	0.1	46900	41060	31892.0	6.77	-283.4	8.57	753.8
11:15	87	89.9	61.7	79745.8	10.1	18.3	0.1	46964	40963	31932.8	6.77	-280.7	6.70	904.7
11:30	102	89.9	61.7	79896.6	10.1	18.2	0.1	46992	40928	31953.2	6.77	-277.8	10.0	
11:45	117	89.85	61.65	80047.3	10.0	18.3	0.1	47016	41014	31973.6	6.77	-274.3	6.13	
12:00	132	89.75	61.55	80198.2	10.1	18.3	0.1	47036	40977	31987.2	6.77	-270.3	15.3	
12:15	147	89.80	61.60	80348.8	10.0	18.2	0.1	47051	40969	31994.0	6.77	-266.8	3.82	
12:30	162	89.65	61.45	80499.6	10.1	18.2	0.1	47059	40962	32000.8	6.77	-262.2	7.50	
12:34:38	167				↓Q to 4.6 gpm		; 12:37:15 ↓Q to 3.2 gpm ~ 12:40 Turb = 9.29 NTU							
12:45	177	47.45	19.25	80583.7	3.1	18.4	0.1	47074	41134	32014.4	6.79	-249.7	1.03	
12:55	187	46.5	18.3	80615.4	3.2	18.7	0.1	47103	41447	32028.0	6.79	-251.5	0.32	
13:05	197	46.1	17.9	80646.5	3.1	18.8	0.1	47112	41546	32034.8	6.79	-253.3	0.25	
13:10	Begin	collecting	WQ samples for lab analysis. Samples placed on ice.											
13:33	225	44.75	16.55	80730.6	3.0	18.9	0.1	47122	41627	32041.6	6.80	-255.7	0.14	
13:41:20	233			80753.5	Pump off. Total Volume pumped = 1,912.4 gallons									

Stabilization Criteria:

3 to 5 minute recordings with 3 consecutive readings within:

pH: +/- 0.1 unit
Cond: +/- 3%
ORP: +/- 10 mV
Turb: +/- 10%
DO: +/- 10%
Desired Flow Rate: 100 to 500 mL/min

Flow thrw cell = 1221.5 mL/min

14:24 276 31.95 3.75

Form Created: 29-Sep-13

GEOSCIENCE

GEOSCIENCE Support Services, Inc.
P.O. Box 220, Claremont, CA 91711
Tel: (909) 451-6650 Fax: (909) 451-6638
www.gssiwater.com

CONFIDENTIAL DRAFT
Subject to Revision

ISOLATED AQUIFER ZONE SAMPLING DATA SHEET

Zone No. 4

Client: RBF/MPWSP - Exploratory Borehole Drilling
Borehole Name/Number: CX-B1WQ
Sonic Casing Dia: 8 in Sonic Casing Depth: 122 ft bgs
Static WL: 22.9 ft brp 2/23 07:33 recovered W.L. = 21.5 ftbgs
RP: 8.0 ft ags (Top of 8" casing)

W.L.'s taken using an electronic w.l. indicator.

Logged By: N. Reynold (GSSI) & Cascade Drilling
Test Date: 2-22-14 / Sat
Screened Interval: 134-144 ft bgs
Reference Point Elevation: _____ ft amsl
Pump Depth: 124 ft bgs

0.68 Constant

Time	Time Step (min)	Water Level (ft brp)	Drawdown (ft)	Totalizer (gal)	Pumping Rate (gpm)	Temp (°C)	DO (mg/L)	Specific Cond. (µS/cm)	Cond. (µS/cm)	TDS (mg/L)	pH	ORP (mV)	Turbitity (NTU)	Vol (gal)
3/22 10:49:49	0	22.9	0	80753.5	Pump	on @ 19.0gpm.								
10:52	2	120.0	97.1		120	↓Q to	3.9 gpm						silty turbid	
10:56	6	95.8	72.9		3.9									
11:00	10	82.0	59.1	80839.1	4.0					highly aerated discharge			157	
11:20	30	73.65	50.75	80923.2	4.2								73.6	
11:35	45	74.4	51.5	80987.1	4.3	18.2	2.8	38044	33127	25846.8	6.80	-149.9	3.42	
11:50	60	74.9	52.0	81052.4	4.4	18.3	3.0	38686	33712	26295.6	6.82	-127.5	1.55	
12:05	75	74.8	51.9	81117.8	4.4	18.2	3.3	38950	33868	26479.2	6.82	-113.0	1.65	364.3
12:20	90	74.8	51.9	81183.2	4.4	18.2	3.4	39056	33956	26560.8	6.82	-103.3	3.62	
12:40	110	74.5	51.6	81271.6	4.4	18.1	3.6	39201	34053	26656.0	6.82	-94.7	10.7	
12:55	125	74.6	51.7	81337.2	4.4	18.1	3.7	39344	34192	26751.2	6.81	-84.4	6.83	585.7
13:10	140	74.35	51.45	81402.6	4.4	18.2	3.8	39394	34270	26785.2	6.81	-77.5	7.13	
13:25	155	74.3	51.4	81468.2	4.4	18.2	3.8	39413	34300	26798.8	6.81	-72.1	10.5	714.7
13:40	170	74.3	51.4	81533.8	4.4	18.2	3.7	39432	34276	26798.8	6.81	-66.7	11.6	
13:55	185	74.35	51.45	81599.6	4.4	18.1	3.7	39481	34312	26846.2	6.81	-62.0	10.5	
13:59:13	189				↓Q to	2.1gpm								
14:05	195	55.55	32.65	81630.2	2.1	18.5	3.6	39527	34305	26880.4	6.81	-61.5	5.41	
14:20	210	49.3	26.4	81662.3	2.1	18.6	3.6	39542	34731	26887.1	6.82	-58.4	0.18	
14:30	220	48.8	25.9	81683.8	2.2	18.7	3.6	39563	34822	26900.8	6.82	-58.0	0.20	
14:40	230	48.7	25.8	81705.1	2.1	18.8	3.6	39592	34907	26921.2	6.82	-56.6	0.24	

Stabilization Criteria:
3 to 5 minute recordings with 3 consecutive readings within:
pH: +/- 0.1 unit
Cond: +/- 3%
ORP: +/- 10 mV
Turb: +/- 10%
DO: +/- 10%
Desired Flow Rate: 100 to 500 mL/min

Flow thru cell = 1062.3 mL/min
13:59 (↓Q) = 1012.1 mL/min

Form Created: 29-Sep-13

GEOSCIENCE
GEOSCIENCE Support Services, Inc.
P.O. Box 220, Claremont, CA 91711
Tel: (909) 451-6650 Fax: (909) 451-6638
www.gssiwater.com

CONFIDENTIAL
DRAFT
Subject to Revision

ISOLATED AQUIFER ZONE SAMPLING DATA SHEET

Zone No. 4

Client: RBF/MPWSP - Exploratory Borehole Drilling
Borehole Name/Number: CX-B1WQ
Sonic Casing Dia: 8 in Sonic Casing Depth: 122 ft bgs
Static WL: 22.9 ft brp
RP: 8.0 ft agc (top of 8" casing)

Logged By: N. Reynolds (GSSI) & Cascade Drilling
Test Date: 2-22-14 / Sat
Screened Interval: 134-144 ft bgs
Reference Point Elevation: _____ ft amsl
Pump Depth: 124 ft bgs

	Time	Time Step (min)	Water Level (ft brp)	Drawdown (ft) (22.9)	Totalizer (gal)	Pumping Rate (gpm)	Temp (°C)	DO (mg/L)	Specific Cond. (µS/cm)	Cond. (µS/cm)	TDS (mg/L) (0.68 constant)	pH	ORP (mV)	Turbitity (NTU)
2/22	14:45	235	Begin collecting WQ samples for lab analysis. Samples placed on ice.											
	15:13	263	49.7	26.8	81782.0	2.3	18.9	3.6	39597	34967	26928.0	6.82	-55.3	0.39
	15:19:23	269				↑Q to 6.8 gpm; 15:21 ↑Q to 7.8 gpm; 15:22 ↑Q to 10.3 gpm								
	15:25	275	102.9	80.0	81842.7	10.3	18.4	2.4	35364	30732	23936	6.94	-148.0	overrange
	15:29:17	279				↓Q to 5.6 gpm (WL was approaching pump)								
	15:33	283	98.6	75.7	81904.3	5.6	17.9	3.6	39539	34214	26894.0	6.81	-68.3	19.4
	15:47	297	84.8	61.9	81982.7	5.6	17.8	3.8	39627	34163	26941.6	6.80	-41.4	15.6
	15:57	307	84.35	61.45	82039.2	5.7	17.8	3.9	39649	34194	26962.0	6.79	-37.1	1.09
	16:07	317	84.2	61.3	82095.7	5.7	17.9	3.9	39641	34252	26955.2	6.79	-33.6	0.75
	16:09:16	319	Pump off		82108.7									
			Total Volume pumped = 1355.2 gallons											
2/23	07:33		29.5	(21.5 ft bgs) Recovered water level.										

Stabilization Criteria:

3 to 5 minute recordings with 3 consecutive readings within:

pH: +/- 0.1 unit
Cond: +/- 3%
ORP: +/- 10 mV
Turb: +/- 10%
DO: +/- 10%
Desired Flow Rate: 100 to 500 mL/min

Form Created: 29-Sep-13

GEOSCIENCE

GEOSCIENCE Support Services, Inc.
P.O. Box 220, Claremont, CA 91711
Tel: (909) 451-6650 Fax: (909) 451-6638
www.gssiwater.com

CONFIDENTIAL DRAFT
Subject to Revision

ISOLATED AQUIFER ZONE SAMPLING DATA SHEET

Zone No. 5

Client: RBF/MPWSP - Exploratory Borehole Drilling
Borehole Name/Number: CX-B1WQ
Sonic Casing Dia: 8 in Sonic Casing Depth: 73 ft bgs
Static WL: 26.0 ft brp
RP: 7.0 flags (top of 8" casing)

W.L.'s taken using an electronic w.l. indicator.

Logged By: N. Reynolds (GSSI) & Cascade Drilling
Test Date: 2-23-14 / Sun
Screened Interval: 84-94 ft bgs
Reference Point Elevation: _____ ft amsl
Pump Depth: 74 ft bgs

0.68 constant

Time	Time Step (min)	Water Level (ft brp)	Drawdown (ft)	Totalizer (gal)	Pumping Rate (gpm)	Temp (°C)	DO (mg/L)	Specific Cond. (µS/cm)	Cond. (µS/cm)	TDS (mg/L)	pH	ORP (mV)	Turbitity (NTU)	Vol Pumped (gal)
2/23 11:58:38	0	26.0	0	82108.7	Pump on @ ~19gpm.			↓Q to 11.1 gpm						
12:01	2	33.8	7.8		11.1					aerated discharge				
12:05	6	33.8	7.8	82187.8	11.2								137	
12:20	21	33.8	7.8	82355.5	11.2								6.09	
12:35	36	33.8	7.8	82523.2	11.2								4.24	
12:55	56	34.0	8.0	82748.2	11.3	17.3	3.5	40675	34656	27655.6	7.00	-21.5	3.45	629.5
13:10	71	34.05	8.05	82920.2	11.5	17.3	3.6	40881	34862	27805.2	7.04	-57.6	4.56	
13:25	86	34.0	8.0	83092.2	11.5	17.3	3.6	41062	35002	27920.8	7.05	-54.5	4.94	983.5
13:40	101	34.02	8.02	83264.5	11.5	17.3	3.6	41158	35069	27988.8	7.05	-44.8	4.67	
13:55	116	34.1	8.1	83436.8	11.5	17.3	3.6	41219	35124	28029.6	7.05	-34.7	3.76	
14:10	131	34.1	8.1	83609.5	11.5	17.3	3.6	41258	35155	28056.8	7.05	-25.0	4.00	
14:25	146	34.2	8.2	83782.1	11.5	17.3	3.7	41289	35178	28077.2	7.05	-16.2	4.17	
14:40	161	34.1	8.1	83954.9	11.5	17.3	3.6	41305	35193	28090.8	7.05	-9.0	4.39	1846.2
14:52	173	34.1	8.1	84093.1	11.5	17.2	3.7	41315	35193	28097.6	7.05	-4.4	4.38	
14:55	176				↓Q	to 5.8gpm ; 14:58 ↓Q to 2.8 gpm								
15:02	183	28.27	2.27	84158.2	2.8	17.7	3.5	41317	35647	28097.6	7.06	-7.8	0.16	
15:12	193	28.25	2.25	84186.4	2.8	18.3	3.4	41304	36002	28084.0	7.06	-12.3	3.65	
15:22	203	28.2	2.2	84214.0	2.8	18.4	3.4	41288	36046	28077.2	7.07	-14.3	9.61	
15:32	213	28.2	2.2	84241.6	2.8	18.4	3.4	41270	36070	28063.6	7.07	-15.7	13.5	
15:42	223	28.15	2.15	84269.0	2.7	18.4	3.3	41262	36051	28056.8	7.07	-14.4	17.0	

Stabilization Criteria:
3 to 5 minute recordings with 3 consecutive readings within:
pH: +/- 0.1 unit
Cond: +/- 3%
ORP: +/- 10 mV
Turb: +/- 10%
DO: +/- 10%
Desired Flow Rate: 100 to 500 mL/min

Flow thru cell = 1219.5 mL/min
= 1180.2 mL/min (↓Q @ 14:55)

Form Created: 29-Sep-13

GEOSCIENCE
GEOSCIENCE Support Services, Inc.
P.O. Box 220, Claremont, CA 91711
Tel: (909) 451-6650 Fax: (909) 451-6638
www.gssiwater.com

CONFIDENTIAL
DRAFT
Subject to Revision

ISOLATED AQUIFER ZONE SAMPLING DATA SHEET

Zone No. 5

Client: RBF/MPWSP - Exploratory Borehole Drilling
Borehole Name/Number: CX-BIWQ
Sonic Casing Dia: 8 in Sonic Casing Depth: 73 ft bgs
Static WL: 26.0 ft brp
RP: 7.0 ft ags

Logged By: N. Reynolds (GSSI) & Cascade Drilling
Test Date: 2-23-14 / Sun
Screened Interval: 84-94 ft bgs
Reference Point Elevation: _____ ft amsl
Pump Depth: 74 ft bgs

Time	Time Step (min)	Water Level (ft brp)	Drawdown (ft) (26.0)	Totalizer (gal)	Pumping Rate (gpm)	Temp (°C)	DO (mg/L)	Specific Cond. (µS/cm)	Cond. (µS/cm)	TDS (mg/L) (0.68 constant)	pH	ORP (mV)	Turbitity (NTU)
2/23 15:48	229				↑Q to 11.5 gpm						15:	50 →	3.05
15:55	236	34.0	8.0	84369.2	11.5	17.2	3.6	41312	35180	28090.8	7.06	-2.8	0.40
16:05	246	34.0	8.0	84485.0	11.6	17.2	3.6	41325	35170	28104.4	7.05	3.6	0.27
16:15	256	34.05	8.05	84600.5	11.6	17.2	3.6	41336	35167	28111.2	7.05	7.9	0.47
16:20	Collect WQ Samples for lab analysis. Samples placed on ice.												
16:43	284	34.1	8.1	84931.0	11.8	17.2	14.0	41346	35171	28118.0	7.05	12.7	0.12
16:50:24	291			85016.7	Pump off.		↑ ? not stabilizing.						
		Total Volume pumped = 2908 gallons											
2/24 09:30		26.3	0.3	Recovered water level prior to pulling Zone tool.									

Stabilization Criteria:

3 to 5 minute recordings with 3 consecutive readings within:

pH: +/- 0.1 unit
Cond: +/- 3%
ORP: +/- 10 mV
Turb: +/- 10%
DO: +/- 10%
Desired Flow Rate: 100 to 500 mL/min

Form Created: 29-Sep-13

GEOSCIENCE
GEOSCIENCE Support Services, Inc.
P.O. Box 220, Claremont, CA 91711
Tel: (909) 451-6650 Fax: (909) 451-6638
www.gsswater.com

CONFIDENTIAL
DRAFT
Subject to Revision

ISOLATED AQUIFER ZONE SAMPLING DATA SHEET

Zone No. 6

Client: RBF/MPWSP - Exploratory Borehole Drilling
U.L's taken using an electronic W.L. Indicator
Borehole Name/Number: CX-BIWQ
Sonic Casing Dia: 9 in Sonic Casing Depth: 34 ft bgs
Static WL: 25.25 ft brp
RP: 6.0 ft ags (top of 9" casing)

Logged By: N. Reynolds (GSSI) & Cascade Drilling (W.L.'s)
Test Date: 2-24-14 / Mon
Screened Interval: 51-61 ft bgs
Reference Point Elevation: _____ ft amsl
Pump Depth: 47 ft bgs

Time	Time Step (min)	Water Level (ft brp)	Drawdown (ft)	Totalizer (gal)	Pumping Rate (gpm)	Temp (°C)	DO (mg/L)	Specific Cond. (µS/cm)	Cond. (µS/cm)	TDS (mg/L) (0.68 constant)	pH	ORP (mV)	Turbitity (NTU)	Vol Pumped (gal)
14:01:32	0	25.25	0	85016.7	Pump on @	10.4 gpm								
14:04	2		-		Pump off. PWL reaches pump.									
14:08:20	0			85048.4	Resume pumping @ 5.2 gpm.									
14:10	2	37.6	12.35		5.2									
14:15	7	38.55	13.30	85087.1	5.2				aerated discharge				684	
14:30	22	38.9	13.65	85166.0	5.3								151	
14:45	37	40.15	14.90	85246.5	5.4	17.7	3.0	32656	28069	22208.8	7.12	-174.7	62.0	
15:00	52	40.1	14.85	85330.5	5.6	17.6	3.1	33784	29013	22990.8	7.17	-159.3	13.4	313.8
15:15	67	40.25	15.00	85412.2	5.4	17.6	3.2	34309	29483	233308	7.18	-142.4	6.29	
15:30	82	40.35	15.10	85494.2	5.5	17.6	3.3	34701	29777	23589.2	7.18	-130.1	4.27	
15:45	97	40.4	15.15	85576.5	5.5	17.6	3.5	35076	30098	23847.6	7.18	-120.1	3.87	559.8
16:00	112	40.4	15.15	85658.6	5.5	17.5	3.6	35234	30194	23963.2	7.18	-113.5	4.26	641.9
16:15	127	40.4	15.15	85740.6	5.5	17.5	3.7	35355	30316	24051.6	7.18	-108.0	4.42	
16:30	142	40.7	15.45	85823.1	5.5	17.5	3.7	35451	30377	24099.2	7.18	-102.9	5.41	
16:45	157	40.8	15.55	85906.7	5.6	17.4	3.8	35658	30507	24242.0	7.17	-98.2	4.47	
16:52	164				↓Q to	4.1 gpm						16:55→	0.60	
17:00	172	36.25	11.0	85978.3	4.1	17.8	3.8	35644	30716	24242.0	7.17	-95.3	0.57	
17:10	182	36.35	11.1	86020.7	4.2	17.7	3.8	35703	30750	24282.8	7.17	-93.5	1.34	
17:20	192	36.33	11.08	86063.1	4.2	17.7	3.7	35736	30790	24303.2	7.17	-91.3	2.48	
17:24:32	197			86081.8	Pump off. Total Volume pumped = 1065.1 gallons									

Flow thru cell = 1,145.9 mL/min

Stabilization Criteria:

3 to 5 minute recordings with 3 consecutive readings within:

pH: +/- 0.1 unit 17:30 26.0 ft brp
Cond: +/- 3%
ORP: +/- 10 mV
Turb: +/- 10%
DO: +/- 10%
Desired Flow Rate: 100 to 500 mL/min

Form Created: 29-Sep-13

GEOSCIENCE
GEOSCIENCE Support Services, Inc.
P.O. Box 220, Claremont, CA 91711
Tel: (909) 451-6650 Fax: (909) 451-6638
www.gssiwater.com

CONFIDENTIAL DRAFT
Subject to Revision

ISOLATED AQUIFER ZONE SAMPLING DATA SHEET

Zone No. 6 WQ-5

Client: RBF/MPWSP - Exploratory Borehole Drilling
Borehole Name/Number: CX-B1WQ
Sonic Casing Dia: 9 in Sonic Casing Depth: 34 ft bgs
Static WL: 25.9 ft brp
RP: 6.0 ft agls (top of 9" casing)

Logged By: N. Reynolds (GSSI) & Cascade Drilling
Test Date: 2-25-14 / Tue
Screened Interval: 51-61 ft bgs
Reference Point Elevation: _____ ft amsl
Pump Depth: 47 ft bgs

0.68 constant

Time	Time Step (min)	Water Level (ft brp)	Drawdown (ft)	Totalizer (gal)	Pumping Rate (gpm)	Temp (°C)	DO (mg/L)	Specific Cond. (µS/cm)	Cond. (µS/cm)	TDS (mg/L)	pH	ORP (mV)	Turbitity (NTU)	Vol Pumped (gal)
07:49:48	0	25.9	0	86081.8	Pump on 9.2 gpm			0752 ↓Q to	4.1 gpm	0755 ↑Q to	5.7 gpm		22.6	
08:00	10	37.4	11.5	8614 1.1	5.8				discharge is aerated					
08:15	25	38.5	12.6	86231.7	6.0	17.4	3.3	35755	30568	24303.2	7.17	-59.3	5.09	
08:30	40	38.5	12.6	86322.3	6.0	17.5	3.4	35851	30693	24378.0	7.18	-68.6	1.56	240.5
08:45	55	38.6	12.7	86413.0	6.0	17.5	3.4	35906	30751	24425.6	7.18	-69.1	0.62	
08:55	65	38.65	12.75	86473.5	6.1	17.5	3.4	35926	30762	24439.2	7.18	-68.5	0.34	
09:05	75	38.7	12.8	86534.0	6.1	17.5	3.5	35952	30803	24452.8	7.18	-67.3	0.33	
09:10	80	Begin collecting WQ samples for lab analysis. samples placed on ice.												
09:31	101	38.8	12.9	86697.4	6.3	17.5	3.6	35999	30861	24493.6	7.18	-63.4	0.25	
09:36:56	107			86733.5										
		Total volume pumped today = 651.7 gallons												
10:15	145	25.8												

Flow thru cell = 1133.8 mL/min

Stabilization Criteria:
3 to 5 minute recordings with 3 consecutive readings within:
pH: +/- 0.1 unit
Cond: +/- 3%
ORP: +/- 10 mV
Turb: +/- 10%
DO: +/- 10%
Desired Flow Rate: 100 to 500 mL/min

Form Created: 29-Sep-13

ISOLATED AQUIFER ZONE CONSTRUCTION

Zone No. 1

204 **to** 236 **ft bgs**

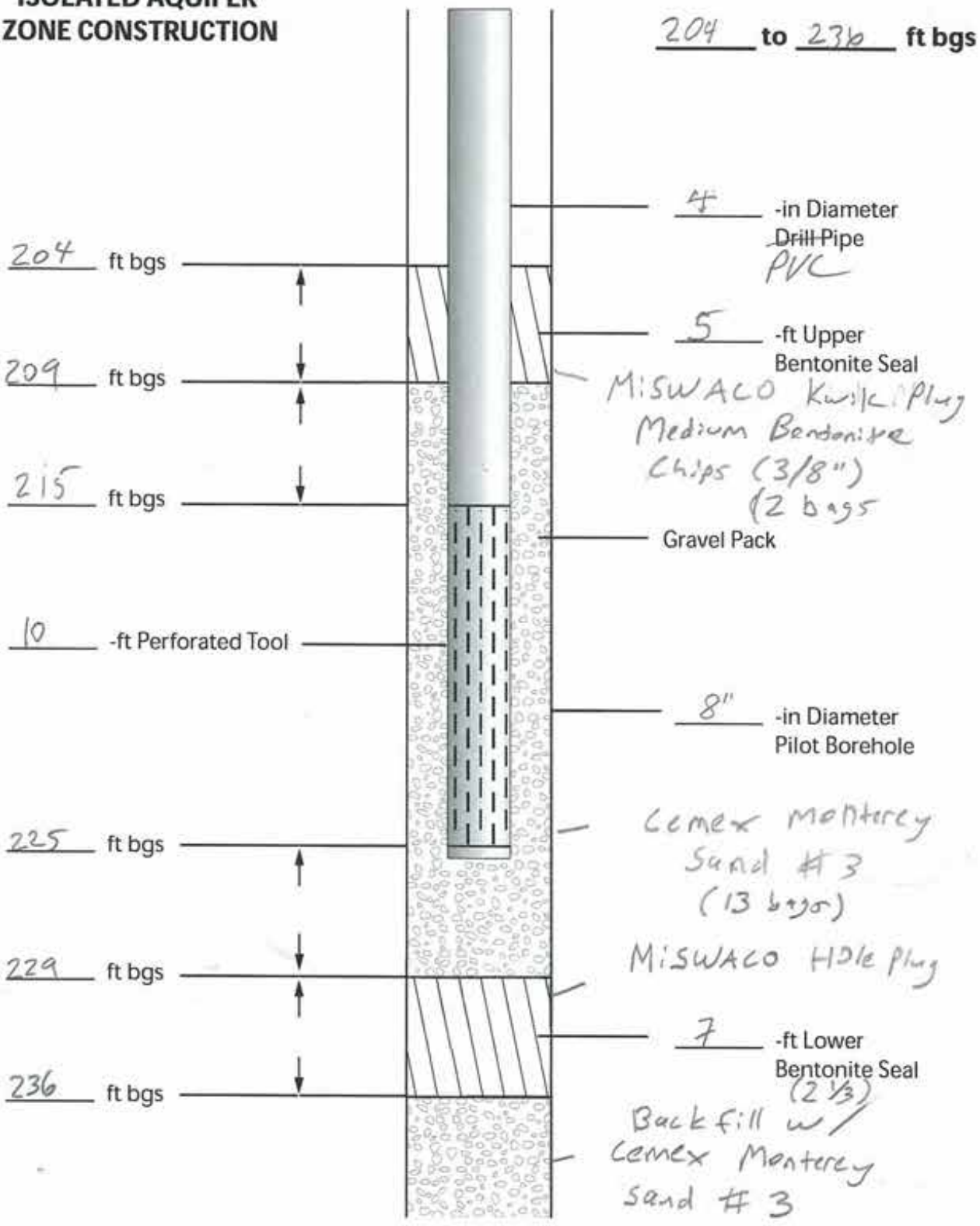

GEOSCIENCE

GEOSCIENCE Support Services, Incorporated
P.O. Box 220, Claremont, CA 91711
Tel: (909) 451-6650 Fax: (909) 451-6638
www.gsiwater.com

Client: RBF Consulting Inc.

Well Name/Number: CX-B2WQ

Date: 3/7/14

ISOLATED AQUIFER ZONE CONSTRUCTION

AS BUILT

Zone No. 2

160.5 **to** 170.5 **ft bgs**

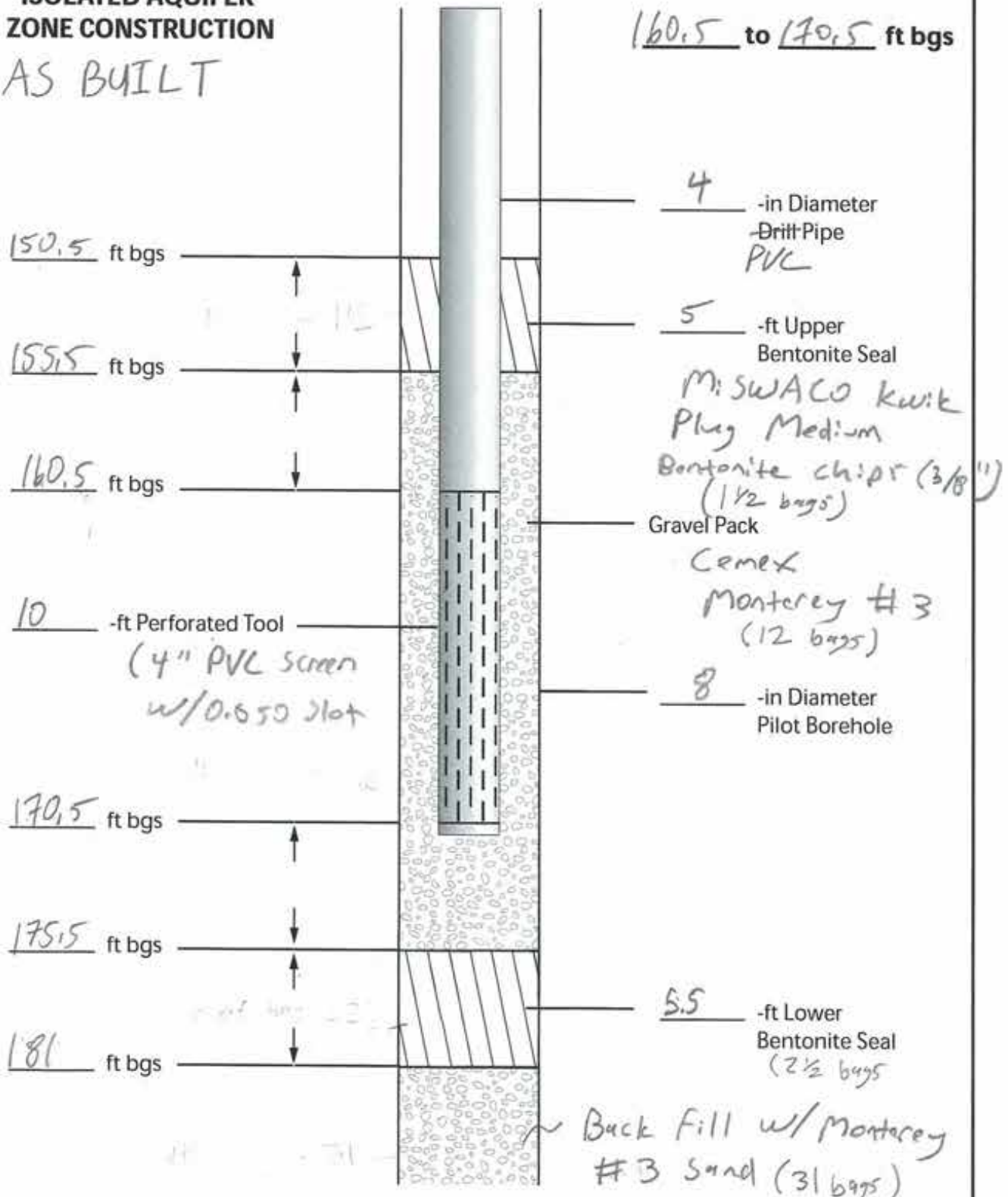

GEOSCIENCE

GEOSCIENCE Support Services, Incorporated
P.O. Box 220, Claremont, CA 91711
Tel: (909) 451-6650 Fax: (909) 451-6638
www.gsiwater.com

Client: RBF Consulting

Well Name/Number: MRWSP Exploratory Borehole CX-B2 WQ

Date: 3/9/14 Sunday

ISOLATED AQUIFER ZONE CONSTRUCTION

Zone No. 3

104 to 114 ft bgs

AS BUILT

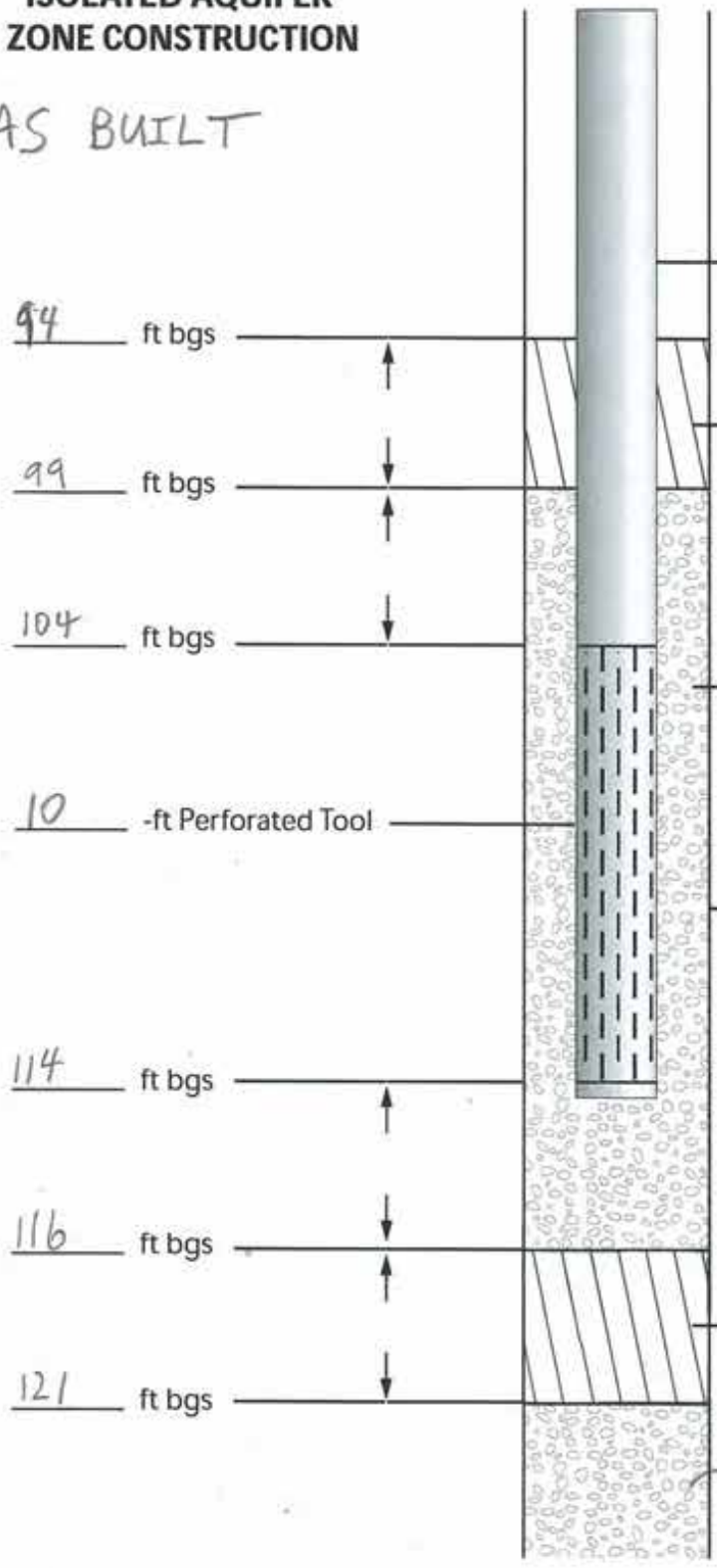

94 ft bgs

99 ft bgs

104 ft bgs

114 ft bgs

116 ft bgs

121 ft bgs

4 -in Diameter Drill Pipe PVC

5 -ft Upper Bentonite Seal

MiSWACO Kwik Plug Medium Bentonite Chips (3/8") (1 1/2 bags)

Gravel Pack

Cemex Monterey #3 (10½ bags)

10 -ft Perforated Tool

8 -in Diameter Pilot Borehole

5 -ft Lower (2½ bags) Bentonite Seal

Backfill w/ Monterey #3 Sand (33 bags)

GEOSCIENCE

GEOSCIENCE Support Services, Incorporated
P.O. Box 220, Claremont, CA 91711
Tel: (909) 451-6650 Fax: (909) 451-6638
www.gsiwater.com

Client: RBF - Consulting Inc

Well Name/Number: MPWSP Exploratory Borehole CX-B2WQ

Date: 3/10/14 Monday

ISOLATED AQUIFER ZONE CONSTRUCTION

Zone No. 4

55 to 65 ft bgs

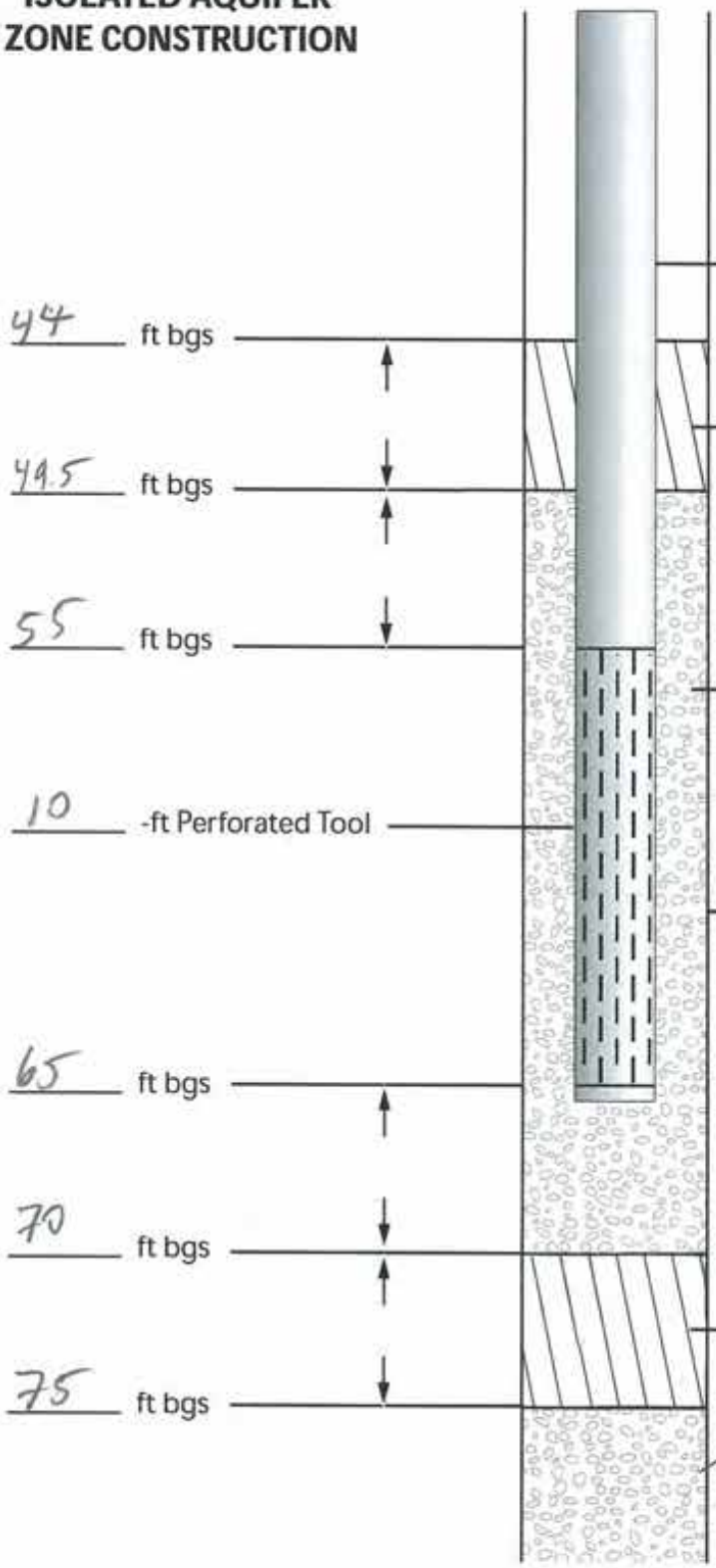

4 -in Diameter ~~Drill~~ Pipe PVC

44 ft bgs

5.5 -ft Upper Bentonite Seal

49.5 ft bgs

Mi-SWACO Kwik Plug Medium Bentonite Chips (3/8")

55 ft bgs

Gravel Pack (1½ bags)

10 -ft Perforated Tool

Lyn Cemex Monterey #3 (10½ bags)

8 -in Diameter Pilot Borehole

65 ft bgs

70 ft bgs

2½ bags

5 -ft Lower Bentonite Seal

75 ft bgs

Backfill w/ Monterey #3 Sand (14 bags)

GEOSCIENCE GEOSCIENCE Support Services, Incorporated P.O. Box 220, Claremont, CA 91711 Tel: (909) 451-6650 Fax: (909) 451-6638 www.gsiwater.com	Client: RBF - Consulting Inc Well Name/Number: MPWSP Exploratory Borehole CX-B2WQ Date: 3/12/14

GEOSCIENCE
GEOSCIENCE Support Services, Inc.
P.O. Box 220, Claremont, CA 91711
Tel: (909) 451-6650 Fax: (909) 451-6638
www.gssiwater.com

CONFIDENTIAL
DRAFT
Subject to Revision

ISOLATED AQUIFER ZONE SAMPLING DATA SHEET

Zone No. 1

Client: RBF/MPWSP - Exploratory Borehole Drilling
Borehole Name/Number: CX-B2WQ
Sonic Casing Dia: 8 in Sonic Casing Depth: 210 ft bgs
Static WL: 36.4 ft brp
RP: 8 ft

Logged By: J. Sebeler (GSSI) & Cafcoda
Test Date: 3/8/14 / Saturday
Screened Interval: 215-225 ft bgs
Reference Point Elevation: _____ ft amsl
Pump Depth: 197 ft bgs

	Time	Time Step (min)	Water Level (ft brp)	Drawdown (ft)	Totalizer (gal x10)	Pumping Rate (gpm)	Temp (°C)	DO (mg/L)	Specific Cond. (µS/cm)	Cond. (µS/cm)	TDS (mg/L) 0.68 constant	pH	ORP (mV)	Turbitity (NTU)	Vol (gal)
	0755	0	36.4	0	8678	Pump on @0755									
	0757	2	46.2	9.8	8679.5	7.5									
Q↑.	0801	6	48.9	12.5	8683	8.75									
Q↑	0805	10	51.5	15.1	8691.5	21.25									
	0825	30	51.7	15.3	8730.5	19.5									
	0840	45	51.85	15.45	8760.5	20									
	0855	60	51.5	15.1	8790	19.66								24.0	
	0910	75	52	15.6	8820	20	19°C	2.9	35366	31322	24058	6.64	103.9	3.98	1570
	0925	90	52.2	15.8	8849.5	19.67	18.8	1.2	35369	31223	24051.6	6.70	79.2	2.85	
	0940	105	52.3	15.9	8879.5	20	18.9	0.9	35254	31127	23970	6.71	71.1	2.47	
Q↓	0955	120	52.35	15.95	8909	19.67	18.9	0.9	35159	31057	23908.5	6.71	67.7	1.90	
	1010	135	43.6	7.2	8927.5	12.33	19.1	0.9	35318	31339	24010	6.72	57.5	1.47	
	1025	150	43.55	7.15	8941.5	9.33	19.2	0.9	35319	31408	24017	6.72	52.1	1.45	
	1040	165	43.50	7.10	8956	9.67	19.3	0.9	35311	31455	24010.8	6.72	48.7	0.91	
	1050	175	43.55	7.15	8966	10	19.2	0.9	35319	31410	24010.8	6.73	45.1	0.78	
	1100	185	43.50	7.10	8976.5	10.5	19.2	0.9	35342	31380	24030.2	6.74	43.4	1.45	
	1115	200	43.55	7.15	8990.5	9.33	19.3	0.9	35349	31471	24038.0	6.74	41.6	1.62	
	1130	215	43.55	7.15	9005.5	10	19.4	0.9	35337	31552	24024.1	6.77	36.0	2.09	
	1145	230	43.60	7.20	9020.5	10	19.3	0.9	35297	31454	24004	6.83	30.3	3.09	
	1200	245	43.60	7.20	9034.5	9.33	19.2	0.9	35259	31398	23997.2	6.72	37.6	3.15	

Stabilization Criteria:

~~3 to 5 minute~~ recordings with 3 consecutive readings within:

Flow thru cell = 940 mL/min

pH: +/- 0.1 unit
Cond: +/- 3%
ORP: +/- 10 mV
Turb: +/- 10%
DO: +/- 10%

Form Created: 29-Sep-13

Sheet 2 2

GEOSCIENCE
GEOSCIENCE Support Services, Inc.
P.O. Box 220, Claremont, CA 91711
Tel: (909) 451-6650 Fax: (909) 451-6638
www.gssiwater.com

CONFIDENTIAL
DRAFT
Subject to Revision

ISOLATED AQUIFER ZONE SAMPLING DATA SHEET

Zone No. 1

Client: RBF/MPWSP - Exploratory Borehole Drilling
Borehole Name/Number: CX-B2WQ
Sonic Casing Dia: 8 in Sonic Casing Depth: 210 ft bgs
Static WL: 36.4 ft brp
RP: 8 ft

Logged By: J. Sobolew (GSSI) & Cascade - WL's
Test Date: 3/8/14 Saturday
Screened Interval: 215-225 ft bgs
Reference Point Elevation: _____ ft amsl
Pump Depth: 197 ft bgs
0.68 constant

Time	Time Step (min)	Water Level (ft brp)	Drawdown (ft)	Totalizer (gal x10)	Pumping Rate (gpm)	Temp (°C)	DO (mg/L)	Specific Cond. (µS/cm)	Cond. (µS/cm)	TDS (mg/L)	pH	ORP (mV)	Turbitity (NTU)
1215	260	43.55	7.15	9049.5	10	19.2	0.9	35272	31384	23983.6	6.72	40.1	3.90
1220	275	43.55	7.15	9064.5	10	19.1	0.9	35269	31308	23976.8	6.71	39.3	2.44
1245	290	43.50	7.10	9078.5	9.33	19.2	0.9	35308	31417	24010.0	6.71	41.5	1.89
1300	305	43.50	7.10	9093.5	10	19.2	0.9	35305	31392	24004.0	6.71	43.4	3.6
Q↑ 1315	320	41.30	4.90	9106.5	9	19.2	0.8	35309	31382	24004	6.71	40.8	2.53
Q↑ 1330	350	43.80	7.40	9116.5	6.67	19.3	0.8	35413	31544	24072	6.71	35.4	4.29
Q↓ 1345	365	40.80	4.40	9129.0	8.33	19.1	0.8	35284	31347	23992	6.72	38.2	3.65
1400	380	40.70	4.30	9138.5	6.33	19.3	0.8	35335	31483	24031.2	6.72	32.1	5.43
1415	395	40.65	4.25	9147.5	6	19.3	0.8	35313	31470	24017.6	6.72	30.5	7.45
1430	410	40.85	4.45	9156.5	6	19.3	0.8	35310	31473	24010.8	6.72	28.3	11.0
Q↑ 1445	425	44.75	8.35	9170.9	9.6	19.0	0.8	35250	31202	23970.0	6.71	36.9	5.28
1500	440	44.85	8.44	9188.1	11.47	18.9	0.9	35238	31195	23963.2	6.71	42.5	5.86
1515	455	44.90	8.50	9206.4	12.2	18.8	0.9	35221	31059	23999.6	6.71	44.8	2.39
1530	470	44.90	8.50	9224.6	12.13	18.9	0.9	35212	31087	23942.8	6.71	46.2	1.29
1545	485	44.90	8.50	9242.8	12.13	18.8	0.9	35226	31097	23949.6	6.71	47.8	0.46
1555	495	44.95	8.55	9255.0	12.20	18.8	0.9	35210	31027	23942.8	6.71	48.5	0.69
1605	505	44.95	8.55	9267.1	12.10	18.8	0.9	35199	31029	23936.0	6.71	49.0	0.91
WQ Sampling @ 1600						Finished Sampling @ 1635							
1638	538	44.90	8.50	9307.5	12.42	18.8	0.9	35152	30973	23902	6.71	49.4	0.90
1645	545	44.90	8.50	9316.0	13.07	18.8	0.9	35143	30951	23895.7	6.71	49.4	0.70

Stabilization Criteria:
3 to 5 minute recordings with 3 consecutive readings within:
pH: +/- 0.1 unit
Cond: +/- 3%
ORP: +/- 10 mV
Turb: +/- 10%
DO: +/- 10%

final totalizer = 9319.20 gals

Form Created: 29-Sep-13

GEOSCIENCE
GEOSCIENCE Support Services, Inc.
P.O. Box 220, Claremont, CA 91711
Tel: (909) 451-6650 Fax: (909) 451-6638
www.gssiwater.com

CONFIDENTIAL
DRAFT
Subject to Revision

ISOLATED AQUIFER ZONE SAMPLING DATA SHEET

Zone No. 2 µL's

Client: RBF/MPWSP - Exploratory Borehole Drilling
Borehole Name/Number: CX-B2 WQ
Sonic Casing Dia: 8 in Sonic Casing Depth: 147 ft bgs
Static WL: 34.25 ft brp
RP: 8 ft ags (Top of Casing)

Logged By: J. Sabolcs & Cascade Drilling
Test Date: 3/9/14 Sunday
Screened Interval: 161-171 ft bgs
Reference Point Elevation: _____ ft amsl
Pump Depth: 151 ft bgs

0.68 constant

Time	Time Step (min)	Water Level (ft brp)	Drawdown (ft)	Totalizer (gal x10)	Pumping Rate (gpm)	Temp (°C)	DO (mg/L)	Specific Cond. (µS/cm)	Cond. (µS/cm)	TDS (mg/L)	pH	ORP (mV)	Turbitity (NTU)	VOL (mL/min)
3/9 1454	0	34.25	Ø	9319	~10gpm									
1456	2	65.2	30.95	9321	~10gpm	missed correct totalizer times								
1500	6	68.7	34.45	9325.7	~10gpm									
1504	10	69.0	34.75	9329.8	10.25								16.5	
1524	30	69.3	35.05	9350.0	10.6								9.38	
1539	45	69.35	35.10	9365.3	10.2								6.78	
1554	60	70.00	35.75	9380.7	10.27								2.90	
1609	75	69.80	35.55	9396.1	10.27	18.6	1.80	21920	18790	14572	6.86	-41.1	3.24	
1624	90	70.0	35.75	9411.8	10.96			21.39 mS/cm					4.63	
1639	105	69.20	34.95	9426.7	9.93								2.82	
1654	120	69.75	35.50	9442.3	10.40	18.4°C	2.2	21506	19800	14620	6.66	78.0	21.3	1,000
1659	125	70.1	35.85	9447.5	10.40	18.4	1.6	21545	18831	14660.8	6.73	37.5	5.17	
1704	130	70.00	35.75	9452.6	10.20	18.4	1.6	21582	18849	14654 7.2	6.74	21.8	3.22	
				9454.85	final totalizer									
3/10 0803	0	34.31	Ø	9454.85										
0805	2	51.6	17.23	9455.3	2.25			33.36 mS/cm						
0809	6	52.3	17.93	9458.8	8.75			36.03 mS/cm					Out of Log	
0813	10	55.1	20.79	9462.1	8.25			33.10 mS/cm					12.8	
0833	30	67.25	32.94	9483.5	10.7	18.2	1.5	25558	22238	17357.20	6.67	45.2	3.76	1,000
0848	45	67.1	32.79	9499.1		18.2	1.5	22495	19597	15593	6.79	32.0	2.24	

Flow through cell = 1,000 mL/min

Stabilization Criteria:
3 to 5 minute recordings with 3 consecutive readings within:
pH: +/- 0.1 unit
Cond: +/- 3%
ORP: +/- 10 mV
Turb: +/- 10%
DO: +/- 10%

GEOSCIENCE

GEOSCIENCE Support Services, Inc.
P.O. Box 220, Claremont, CA 91711
Tel: (909) 451-6650 Fax: (909) 451-6638
www.gssiwater.com

CONFIDENTIAL
DRAFT
Subject to Revision

ISOLATED AQUIFER ZONE SAMPLING DATA SHEET

Zone No. 2 4/24/15

Client: RBF/MPWSP - Exploratory Borehole Drilling
Borehole Name/Number: CX-B2 WQ
Sonic Casing Dia: 8 in Sonic Casing Depth: 142 ft bgs
Static WL: 34.31 ft brp
RP: 8ft ags (Top of casing)

Logged By: J. Sobolew & Cascade Drilling
Test Date: 3/10/14 Monday
Screened Interval: 161-171 ft bgs
Reference Point Elevation: _____ ft amsl
Pump Depth: 151 ft bgs
0.68 constant

Time	Time Step (min)	Water Level (ft brp)	Drawdown (ft)	Totalizer (gal)x10 9499.1	Pumping Rate (gpm)	Temp (°C)	DO (mg/L)	Specific Cond. (µS/cm)	Cond. (µS/cm)	TDS (mg/L)	pH	ORP (mV)	Turbitity (NTU)	Vol mL/min
0903	60	67.45	33.14	9515.0	10.6	18.2	1.4	21701	18903	14762.8	6.70	25.1	2.03	1,100
0918	75	67.50	33.19	9530.8	10.53	18.3	1.4	21502	18739	14620.0	6.69	25.1	1.93	
0933	90	67.60	33.29	9546.6	10.53	18.3	1.4	21467	18755	14606.40	6.69	26.8	1.17	
0948	105	67.60	33.29	9563.7	11.40	18.3	1.5	21634	18887	14715.00	6.69	29.3	0.76	
0958	115	67.60	33.29	9573.0	9.30	18.3	1.4	21646	18879	14708.40	6.69	29.9	0.74	
1008	125	67.70	33.39	9583.60	10.6	18.3	1.4	21620	18875	14705.40	6.69	30.9	0.49	
1012	WQ	Sampling												
1044	161	67.85	33.54	9622.40	10.78	18.4	1.4	21681	18965	14779.2	6.68	35.8	0.29	1,000
1054	171	67.85	33.54	9637.0	10.60	18.4	1.4	21686	18960	14762.8	6.68	36.2	0.44	
1104	181	68.10	33.79	9643.5	10.50	18.4	1.4	21710	18952	14791.0	6.68	36.7	0.28	
1114	191	68.0	33.69	9654.1	10.50	18.4	1.4	21715	18996	14776.4	6.68	37.5	0.24	
1117	Final	totalizer		9656.8	pump off									
1220	WL	Recovery	= 35.30 ft brp											

Flow through cell = 1,100 mL/min

Stabilization Criteria:

3 to 5 minute recordings with 3 consecutive readings within:

pH: +/- 0.1 unit
Cond: +/- 3%
ORP: +/- 10 mV
Turb: +/- 10%
DO: +/- 10%

Form Created: 29-Sep-13

GEOSCIENCE
GEOSCIENCE Support Services, Inc.
P.O. Box 220, Claremont, CA 91711
Tel: (909) 451-6650 Fax: (909) 451-6638
www.gssiwater.com

CONFIDENTIAL
DRAFT
Subject to Revision

ISOLATED AQUIFER ZONE SAMPLING DATA SHEET

Zone No. 3

Client: RBF/MPWSP - Exploratory Borehole Drilling
Borehole Name/Number: CX-B2WQ
Sonic Casing Dia: 8 in Sonic Casing Depth: 92 ft bgs
Static WL: 31.70 ft brp
RP: 8 ft bgs (Top of Casing)

Logged By: J. Sobolew & Cascade - WL's
Test Date: 3/10-11/14
Screened Interval: 104-114 ft bgs
Reference Point Elevation: _____ ft amsl
Pump Depth: 91 ft bgs

	Time	Time Step (min)	Water Level (ft brp)	Drawdown (ft)	Totalizer (gal x10)	Pumping Rate (gpm)	Temp (°C)	DO (mg/L)	Specific Cond. (µS/cm)	Cond. (µS/cm)	TDS (mg/L)	pH	ORP (mV)	Turbitity (NTU)	VOL (mL/min)
3/10	1627	0	31.70	Ø	9656.4		Myron L								
	1629	2	47.00	15.30	9658.8	12.0	19.3		8632 µS/cm					Out of range	
	1633	6	47.00	15.30	9664.9	15.25	18.2		31.73 mS/cm						
	1637	10	45.30	13.60	9668.2	8.25	17.9		32.52 mS/cm					291	
	1642	15	45.70	14.0	9673.6	10.80	18.1		35.68 mS/cm					94.3	
	1643	Pump	off	←	9674.2										
3/11	0754	0	32.30	Ø	9674.2										
highly aerated	0756	2	45.70	13.40	9676.7	12.50								81.60	
	0800	6	45.65	13.35	9681.3	11.50								11.90	
	0804	10	45.85	13.55	9685.9	11.50	17.8	5.7	39363	33919	26751.2	6.69	127.3	5.29	
	0824	30	45.90	13.60	9709.0	11.55	17.8	4.6	38170	32980	25976.0	7.01	8.1	5.26	1,100
	0839	45	45.85	13.55	9726.3	11.53	17.8	4.6	38848	33526	26424.6	7.00	-3.3	5.05	
	0854	60	45.90	13.60	9743.6	11.53	17.9	4.7	39263	33912	26696.0	6.98	2.9	2.39	
	0909	75	45.95	13.65	9761.2	11.60	17.9	5.0	39662	34262	26975.6	6.98	12.6	2.45	
	0924	90	45.95	13.65	9778.4	11.47	17.9	5.1	39796	34408	27057.2	6.97	21.2	2.89	
	0939	105	45.95	13.65	9796.1	11.80	18.0	5.1	39821	34467	27077.6	6.97	27.9	2.65	1,000
	0954	120	46.0	13.70	9813.1	11.33	18.0	5.3	39909	34539	27132.0	6.97	33.6	1.53	
	1009	135	46.0	13.70	9830.6	11.66	18.0	5.3	39946	34607	27166.2	6.96	38.8	1.97	
	1024	150	46.0	13.70	9848.0	11.60	18.0	5.4	39974	34662	27179.6	6.96	42.2	2.52	
	1039	165	46.05	13.75	9865.4	11.60	18.0	5.4	33998	34666	27193.2	6.97	44.6	2.30	

Stabilization Criteria:
3 to 5 minute recordings with 3 consecutive readings within:
pH: +/- 0.1 unit
Cond: +/- 3%
ORP: +/- 10 mV
Turb: +/- 10%
DO: +/- 10%

Flow through cell = 1,100 mL/min

Form Created: 29-Sep-13

GEOSCIENCE

GEOSCIENCE Support Services, Inc.
P.O. Box 220, Claremont, CA 91711
Tel: (909) 451-6650 Fax: (909) 451-6638
www.gssiwater.com

CONFIDENTIAL
DRAFT
Subject to Revision

ISOLATED AQUIFER ZONE SAMPLING DATA SHEET

Zone No. 3

Client: RBF/MPWSP - Exploratory Borehole Drilling
Borehole Name/Number: CX-B2WQ
Sonic Casing Dia: 8 in Sonic Casing Depth: 12 ft bgs
Static WL: 31.7, 32.3 ft brp
RP: 8 ft agl (Top of Casing)

Logged By: J. Sobalvarro & Cascade Drilling WL's
Test Date: 3/10-11/14
Screened Interval: 104-114 ft bgs
Reference Point Elevation: _____ ft amsl
Pump Depth: 91 ft bgs

0.68 Constant

Time	Time Step (min)	Water Level (ft brp)	Drawdown (ft)	Totalizer (gal)	Pumping Rate (gpm)	Temp (°C)	DO (mg/L)	Specific Cond. (µS/cm)	Cond. (µS/cm)	TDS (mg/L)	pH	ORP (mV)	Turbitity (NTU)	VOL (mL/min)
1054	180	46.00	13.70	9882.9	11.67	18.1	5.4	40044	34737	27274.2	6.96	46.5	1.25	1,050
1109	195	46.05	13.75	9900.3	11.60	18.1	5.3	40057	34741	27234.0	6.96	47.3	0.49	
1119	210	46.00	13.70	9912.0	11.70	18.1	5.3	40017	34769	27220.4	6.97	48.0	1.07	
1129	220	46.00	13.70	9923.6	11.60	18.1	5.4	40025	34769	27213.0	6.97	47.9	1.89	
1144	235	46.05	13.75	9941.1	11.66	18.1	5.3	40029	34781	27217.6	6.96	48.5	1.80	
1159	250	46.00	13.70	9958.4	11.53	18.1	5.3	40022	34794	27213.6	6.96	48.1	0.94	
1209	260	46.00	13.70	9970.1	11.70	18.2	5.3	40061	34807	27247.6	6.97	47.5	1.87	
1224	275	46.00	13.70	9987.5	11.60	18.1	5.3	40069	34712	27247.6	6.96	47.2	2.38	
1239	210	46.10	13.80	10004.9	11.60	18.2	5.3	40037	34710	27227.2	6.97	46.0	3.04	
1254	305	37.70	5.40	10016.0	7.4	18.7	5.2	40125	35342	27281.6	6.98	36.6	5.66	
1309	320	37.70	5.40	10023.5	5.0	18.8	5.2	40133	35319	27288.4	6.97	31.7	3.72	
1324	335	37.70	5.40	10031.0	5.0	18.9	5.2	40133	35432	27288.4	6.98	30.9	3.06	
1339	350	37.70	5.40	10038.4	4.93	18.8	5.2	40126	35380	27281.6	6.97	29.7	1.90	
1354	365	37.70	5.40	10045.86	4.97	18.7	5.2	40150	35342	27308.8	6.19	29.1	1.90	
1409	380	37.70	5.40	10053.32	4.17	18.7	5.3	40155	35332	27302.0	6.97	28.2	1.70	
1424	395	37.70	5.40	10060.78	4.17	18.6	5.2	40156	35279	27308.8	6.97	27.0	4.27	
1439	410	37.70	5.40	10068.23	4.97	18.6	5.3	40159	35288	27308.8	6.97	26.4	3.19	
1454	425	37.60	5.30	10075.57	4.89	18.6	5.3	40166	35265	27308.8	6.97	25.5	4.58	1,200
1509	440	51.35	19.05	10097.08	14.34	17.7	5.6	40159	34555	27308	6.96	39.8	0.86	
1524	455	51.4	19.1	10121.93	16.60	17.7	5.6	40160	34536	27315.6	6.95	44.2	0.69	

Q↓

Q↑

Flow through cell = 1,050 mL/min

Stabilization Criteria:

3 to 5 minute recordings with 3 consecutive readings within:

pH: +/- 0.1 unit
Cond: +/- 3%
ORP: +/- 10 mV
Turb: +/- 10%
DO: +/- 10%

Form Created: 29-Sep-13

GEOSCIENCE

GEOSCIENCE Support Services, Inc.
P.O. Box 220, Claremont, CA 91711
Tel: (909) 451-6650 Fax: (909) 451-6638
www.gssiwater.com

CONFIDENTIAL
DRAFT
Subject to Revision

ISOLATED AQUIFER ZONE SAMPLING DATA SHEET

Zone No. 3

Client: RBF/MPWSP - Exploratory Borehole Drilling
Borehole Name/Number: CX-B2 WB
Sonic Casing Dia: 8 in Sonic Casing Depth: 92 ft bgs
Static WL: 31.7 (3/10), 32.3 (3/11) ft brp
RP: 8 ft ags (Top of casing)

Logged By: J. Sobolew & Cascade Drilling / WL's
Test Date: 3/10-11/14
Screened Interval: 104-114 ft bgs
Reference Point Elevation: _____ ft amsl
Pump Depth: 91 ft bgs
0.68 constant

Time	Time Step (min)	Water Level (ft brp)	Drawdown (ft)	Totalizer (gal 10/21.98)	Pumping Rate (gpm)	Temp (°C)	DO (mg/L)	Specific Cond. (µS/cm)	Cond. (µS/cm)	TDS (mg/L)	pH	ORP (mV)	Turbitity (NTU)
1534	465	51.40	19.10	10137.35	15.37	17.7	5.6	40170	34534	27315.6	6.96	45.1	0.73
1544	475	51.40	19.10	10153.56	16.21	17.6	5.7	40173	34532	27315.6	6.96	45.6	0.57
1545	* WQ Sampling												
1614	505	51.3	19.00	10203.05	16.50	17.7	5.6	40185	34550	27322.4	6.96	45.5	0.58
1624	515	51.40	19.10	10218.13	15.08	17.6	5.7	40188	34534	27329.2	6.96	45.9	0.45
1634	525	51.35	19.05	10234.26	16.13	17.6	5.6	40189	34534	27329.2	6.96	45.0	0.35
1637	pump	off	@	10237.43									
3/12 0745		32.60	WL Recovery										

VOL (mL/min) 1,200

Flow through Cell = 1,200 mL/min

Stabilization Criteria:

3 to 5 minute recordings with 3 consecutive readings within:

pH: +/- 0.1 unit
Cond: +/- 3%
ORP: +/- 10 mV
Turb: +/- 10%
DO: +/- 10%

Form Created: 29-Sep-13

GEOSCIENCE

GEOSCIENCE Support Services, Inc.
P.O. Box 220, Claremont, CA 91711
Tel: (909) 451-6650 Fax: (909) 451-6638
www.gssiwater.com

CONFIDENTIAL
DRAFT
Subject to Revision

ISOLATED AQUIFER ZONE SAMPLING DATA SHEET

Zone No. 4

Client: RBF/MPWSP - Exploratory Borehole Drilling
Borehole Name/Number: CX-B2WQ
Sonic Casing Dia: 8 in Sonic Casing Depth: 44 ft bgs
Static WL: 21.75 ft brp 30.90 w/ pump in
RP: 6.5 ft agl (top of casing)

Logged By: J. Sobolew & Cascade - WL's
Test Date: 3/12/14 Wednesday
Screened Interval: 55-65 ft bgs
Reference Point Elevation: _____ ft amsl
Pump Depth: 54 ft bgs
0.68 Constant

Time	Time Step (min)	Water Level (ft brp)	Drawdown (ft)	Totalizer (gals)	Pumping Rate (gpm)	Temp (°C)	DO (mg/L)	Specific Cond. (µS/cm)	Cond. (µS/cm)	TDS (mg/L)	pH	ORP (mV)	Turbitity (NTU)	Vol (mL/min)
1205	0	30.80	0	102374.2										
1209	2	34.80	4.00	102395.1	10.45								Out of Range	
1211	6	35.00	4.20	102424.4	7.33								Out of Range	
1215	10	35.00	4.20	102457.6	7.30								Out of Range	
1235	30	36.50	5.70	102634.7	9.06								71.5	1,100
1250	45	36.65	5.85	102781.7	9.80	18.3	4.4	39400	34377	26771.6	7.11	-34.7	9.59	
1305	60	36.65	5.85	102930.0	9.89	18.3	4.5	39553	34531	26914.4	7.11	-27.3	7.64	
1320	75	36.65	5.85	103078.4	9.89	18.3	4.6	39691	34643	26916.0	7.11	-20.1	6.52	
1335	10	37.90	7.10	103247.9	11.30	18.2	4.5	39727	34565	27016.4	7.12	-13.7	7.57	
1350	105	37.85	7.05	103427.8	11.99	18.2	4.6	39745	34616	27030.8	7.11	-9.1	5.30	1,100
1405	120	37.85	7.05	103607.8	12.00	18.2	4.6	39771	34581	27043.6	7.12	-6.6	5.64	
1420	135	37.85	7.05	103788.0	12.01	18.2	4.6	39762	34578	27036	7.12	-3.3	4.15	
1435	150	37.85	7.05	103968.2	12.01	18.1	4.7	39752	34555	27023.3	7.12	-0.5	3.04	
1450	165	37.85	7.05	104148.4	12.01	18.1	4.7	39725	34520	27016.4	7.12	2.1	2.63	1,000
1505	180	37.85	7.05	104328.7	12.02	17.9	4.8	39721	34358	27016.4	7.12	4.3	2.53	
1520	195	37.85	7.05	104508.9	12.01	17.8	4.8	39742	34309	27030.0	7.12	7.0	1.21	
1535	210	37.85	7.05	104689.3	12.03	17.8	4.7	39729	34273	27016.4	7.12	8.7	0.98	
1545	220	37.85	7.05	104809.5	12.02	17.8	4.7	39703	34233	27002.8	7.10	10.1	0.87	
1555	230	37.85	7.05	104939.8	12.97	17.8	4.8	39704	34240	27002.8	7.12	11.1	1.79	
1610	245	37.85	7.05	105110.0	11.35	17.9	4.7	39610	34276	26989.2	7.12	12.8	1.75	

QT
QT

Flow Through Cell = 1,100 mL/min

Stabilization Criteria:

3 to 5 minute recordings with 3 consecutive readings within:

pH: +/- 0.1 unit
Cond: +/- 3%
ORP: +/- 10 mV
Turb: +/- 10%
DO: +/- 10%

Form Created: 29-Sep-13

GEOSCIENCE

GEOSCIENCE Support Services, Inc.
P.O. Box 220, Claremont, CA 91711
Tel: (909) 451-6650 Fax: (909) 451-6638
www.gssiwater.com

CONFIDENTIAL
DRAFT
Subject to Revision

ISOLATED AQUIFER ZONE SAMPLING DATA SHEET

Zone No. 4

Client: RBF/MPWSP - Exploratory Borehole Drilling
Borehole Name/Number: CX-B2WQ
Sonic Casing Dia: 8 in Sonic Casing Depth: 44 ft bgs
Static WL: 29.75 ft brp 30.80 w/pump in
RP: 6.5 ft ags (top of casing)

Logged By: J. Sobdew & Cascade Drilling - WL's
Test Date: 3/12/14 Wednesday
Screened Interval: 55-65 ft bgs
Reference Point Elevation: _____ ft amsl
Pump Depth: 54 ft bgs
0.68 constant

Time	Time Step (min)	Water Level (ft brp)	Drawdown (ft)	Totalizer (gal)	Pumping Rate (gpm)	Temp (°C)	DO (mg/L)	Specific Cond. (µS/cm)	Cond. (µS/cm)	TDS (mg/L)	pH	ORP (mV)	Turbitity (NTU)
1625	260	37.85	7.05	105290.5	12.03	17.7	4.7	39696	34194	26989.2	7.10	13.4	0.83
1635	270	37.85	7.05	105410.6	12.01	17.7	4.7	39694	34162	26996.0	7.12	13.9	1.22
1645	280	37.85	7.05	105530.7	12.01	17.7	4.7	39676	34155	26982.4	7.13	14.1	0.99
1655	290	37.85	7.05	105651.0	12.03	17.8	4.7	39666	34191	26975.6	7.12	15.7	0.42
1705	300	37.85	7.05	105771.2	12.02	17.8	4.7	39657	34162	26968.8	7.12	16.2	0.63
1715	WQ	Sampling											
1730	325	37.85	7.05	106071.9	12.03	17.7	4.7	39650	34100	26962.0	7.13	17.5	0.98
1740	335	37.85	7.05	106191.6	11.97	17.6	4.7	39642	34097	26962.0	7.13	18.3	0.85
				106219.3									
3/13 0735	Recovery	31.20 ft	brp										

VOL (mL/min) 1,000

Flow through cell = 1,000 mL/min

Stabilization Criteria:

3 to 5 minute recordings with 3 consecutive readings within:

pH: +/- 0.1 unit
Cond: +/- 3%
ORP: +/- 10 mV
Turb: +/- 10%
DO: +/- 10%

Form Created: 29-Sep-13

Zone # 1 As Built

ISOLATED AQUIFER ZONE CONSTRUCTION

Zone No. 1

306 to 316 ft bgs

8" Sonic Casing to 285 ftbgs. Open annulus above upper bentonite seal.

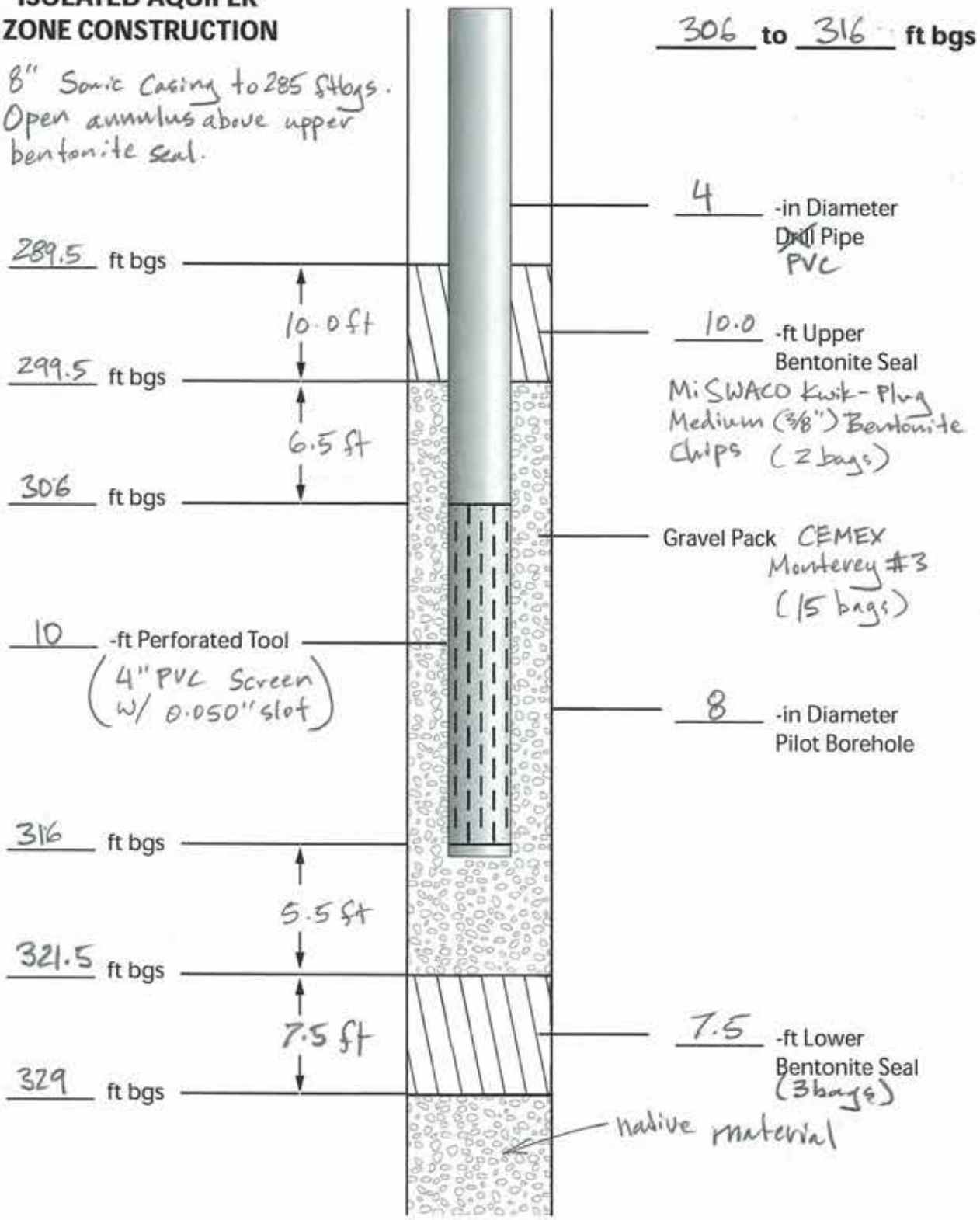

GEOSCIENCE
GEOSCIENCE Support Services, Incorporated
P.O. Box 220, Claremont, CA 91711
Tel: (909) 451-6650 Fax: (909) 451-6638
www.gssiwater.com

Client: RBF Consulting Inc.

Well Name/Number: MPWSP Exploratory Borehole CX-B4

Date: 4-3-14 / Thu & 4-4-14 / Fri.

Zone #2 As-Built

ISOLATED AQUIFER ZONE CONSTRUCTION

Zone No. 2

248 to 258 ft bgs

8" Sonic Casing to 236 ftbgs. Open annulus above upper bentonite seal.

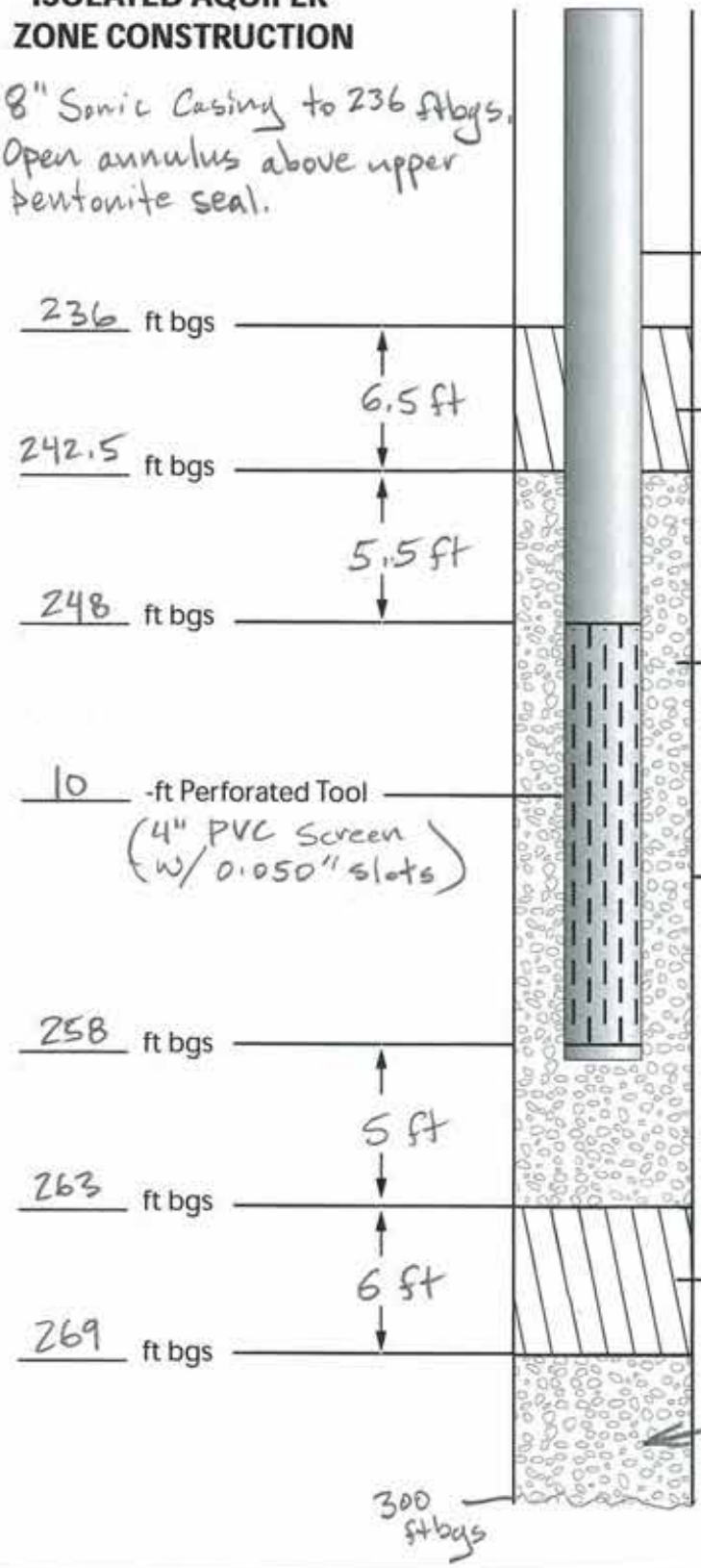

4 -in Diameter Drill Pipe PVC

236 ft bgs

6.5 ft

6.5 -ft Upper Bentonite Seal

MiSWACO Kwik-Plug Medium (3/8") Bentonite chips (2 bags)

242.5 ft bgs

5.5 ft

248 ft bgs

Gravel Pack CEMEX Monterey #3 (13.5 bags)

10 -ft Perforated Tool (4" PVC Screen w/ 0.050" slots)

8 -in Diameter Pilot Borehole

258 ft bgs

5 ft

263 ft bgs

6 ft

6 -ft Lower Bentonite Seal (2.5 bags)

269 ft bgs

33 bags of CEMEX Monterey #3

800 gal H_2O

300 ftbgs

GEOSCIENCE GEOSCIENCE Support Services, Incorporated P.O. Box 220, Claremont, CA 91711 Tel: (909) 451-6650 Fax: (909) 451-6638 www.geoservices.com	Client: RBF Consulting Inc. Well Name/Number: MPWSP Exploratory Borehole CX-B4 Date: 4-5-14 / Sat

Zone#3 As Built

ISOLATED AQUIFER ZONE CONSTRUCTION

Zone No. 3

155 to 165 ft bgs

8" sonic casing to 144 ft bgs. Open annulus above upper bentonite seal.

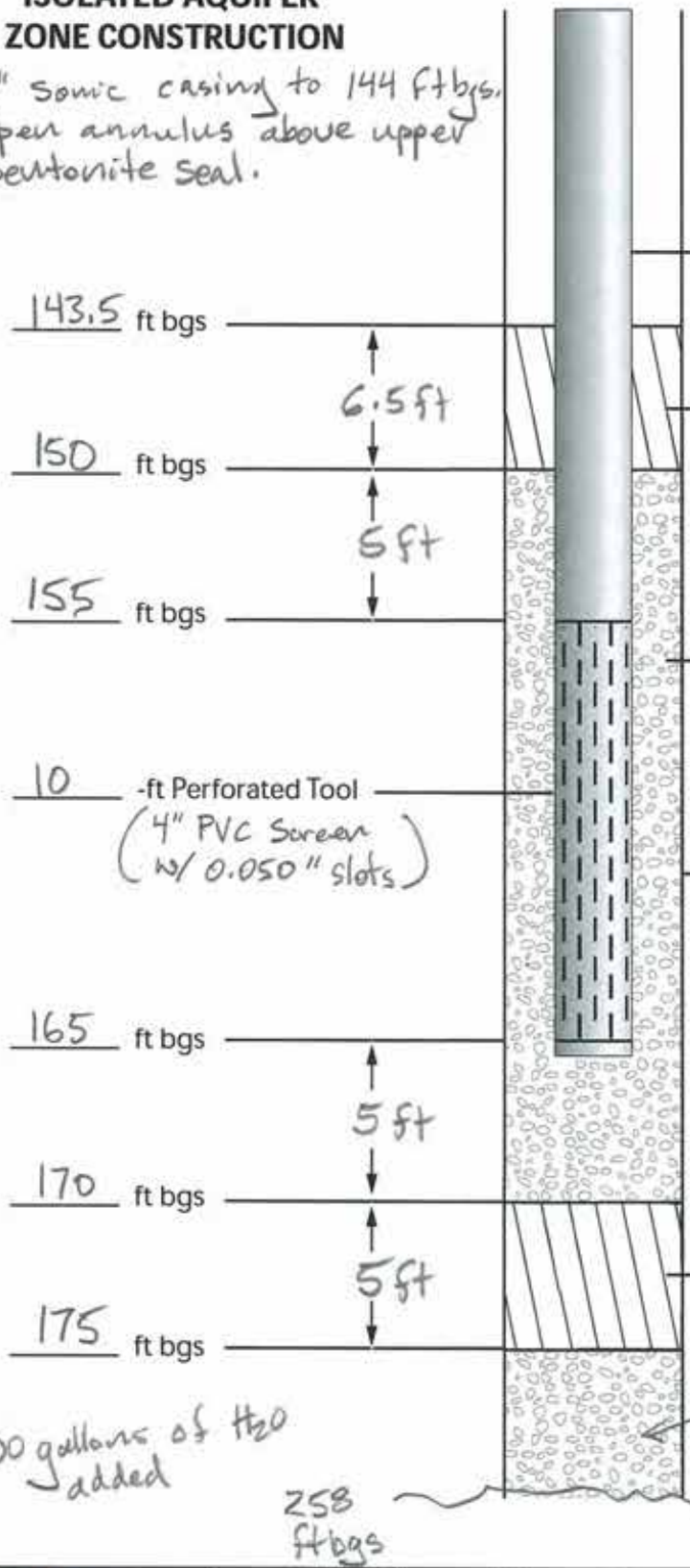

GEOSCIENCE

GEOSCIENCE Support Services, Incorporated
P.O. Box 220, Claremont, CA 91711
Tel: (909) 451-6650 Fax: (909) 451-6638
www.geoswater.com

Client: RBF Consulting Inc.

Well Name/Number: MPWSP Exploratory Borehole CX-B4

Date: 4-7-14 / Mon

Zone #4 As Built

ISOLATED AQUIFER ZONE CONSTRUCTION

Zone No. 4

110 to 120 ft bgs

8" sonic casing to 95.8 ft bgs
Open annulus above upper bentonite seal.

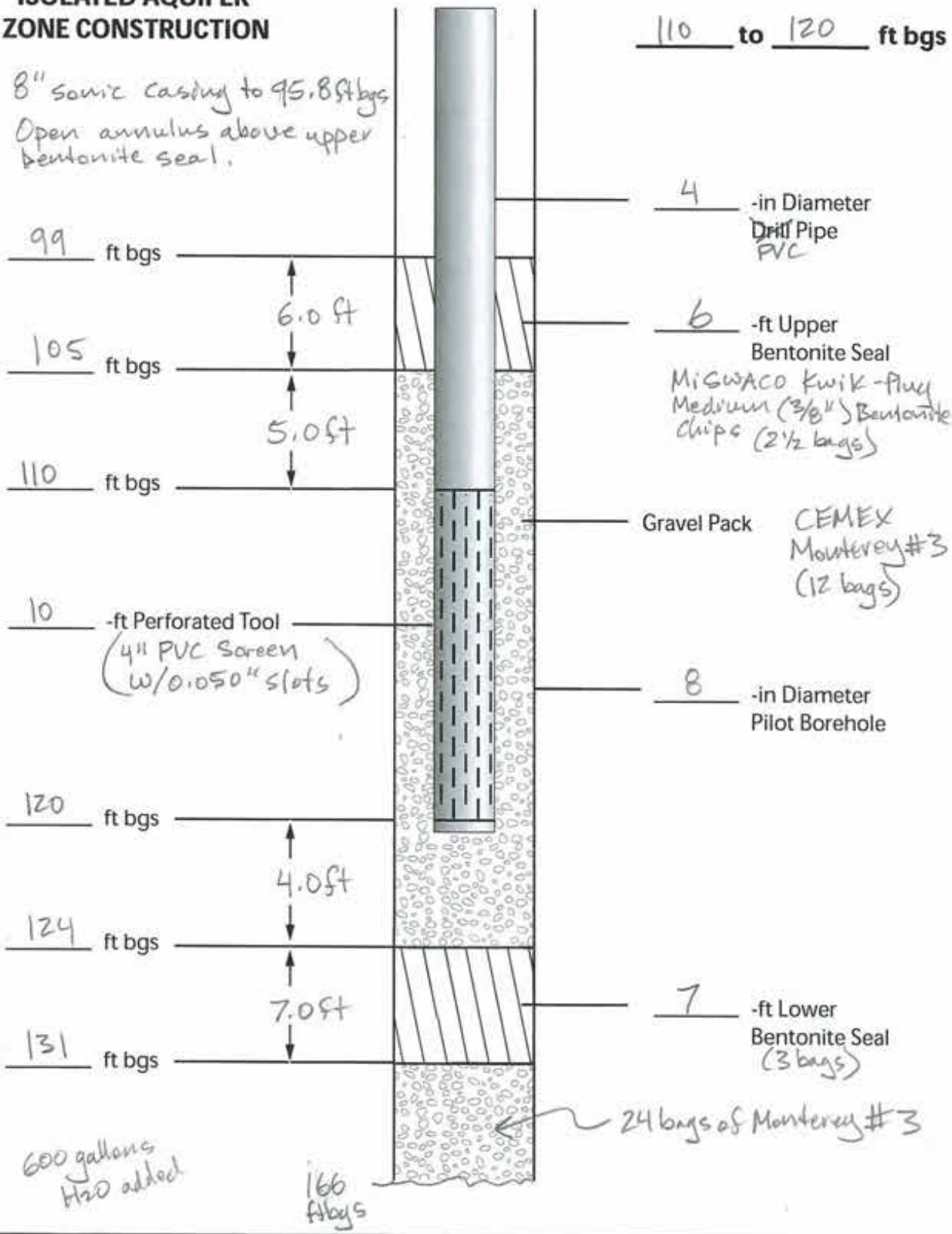

GEOSCIENCE

GEOSCIENCE Support Services, Incorporated
P.O. Box 220, Claremont, CA 91711
Tel: (909) 451-6650 Fax: (909) 451-6638
www.gsiwater.com

Client: RBF Consulting Inc.
Well Name/Number: MPWSP Exploratory Borehole CX-B4
Date: 4-8-14 / Tue

Zone #5 As-Built

ISOLATED AQUIFER ZONE CONSTRUCTION

Zone No. 5

58 to 68 ft bgs

8" sonic casing to 45.7ft bgs. Open annulus above upper bentonite seal.

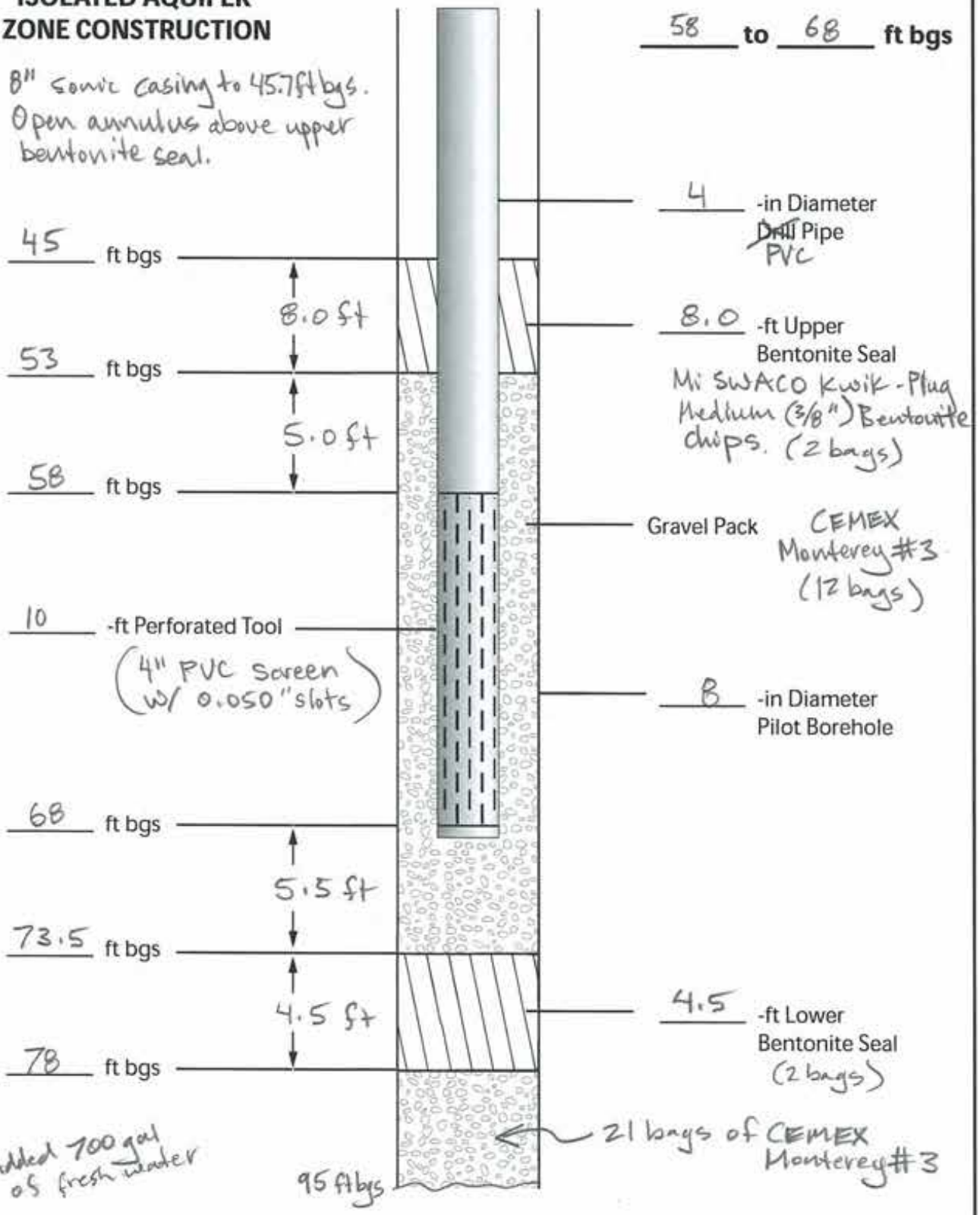

GEOSCIENCE GEOSCIENCE Support Services, Incorporated P.O. Box 220, Claremont, CA 91711 Tel: (909) 451-6650 Fax: (909) 451-6638 www.gsiwater.com	Client: RBF Consulting Inc. Well Name/Number: MPWSP Exploratory Borehole CX-B4 Date: 4-9-14 / Wed

Sheet 1 2

GEOSCIENCE

GEOSCIENCE Support Services, Inc.
P.O. Box 220, Claremont, CA 91711
Tel: (909) 451-6650 Fax: (909) 451-6638
www.gssiwater.com

CONFIDENTIAL DRAFT
Subject to Revision

ISOLATED AQUIFER ZONE SAMPLING DATA SHEET

Zone No. 1

Client: RBF/MPWSP - Exploratory Borehole Drilling
N.L.'s taken using an electronic W.L. indicator.
Logged By: N. Reynolds (GSSI) & Cascade Drilling (W.L.'s)
Borehole Name/Number: CX-B4
Test Date: 4-4-14 / Fri
Sonic Casing Dia: 8 in Sonic Casing Depth: 285 ft bgs
Screened Interval: 306-316 ft bgs
Static WL: 45.9 ft brp
Reference Point Elevation: _____ ft amsl
RP: 7.5 ft ags (Top of 8" casing) stable
Pump Depth: 193.3 ft bgs (intake)
0.68 constant

Time	Time Step (min)	Water Level (ft brp)	Drawdown (ft)	Totalizer (gal)	Pumping Rate (gpm)	Temp (°C)	DO (mg/L)	Specific Cond. (µS/cm)	Cond. (µS/cm)	TDS (mg/L)	pH	ORP (mV)	Turbitity (NTU)
12:44:15	0	45.9	0	106218.9	Pump on @ ~12 gpm.			12:46	↓Q to 9.2 gpm				
12:50	6	138.0	92.1	—	9.2		↑Q to 9.8 gpm. Rate decreasing on its own.						
13:05	21	175.8	129.9	—	9.3		Water	aerated & turbid.					over range
13:15	31	175.95	130.05	106513.0	9.5		Water	milky/aerated					257
13:30	46	175.45	129.55	106653.3	9.4		"		"				47.6
13:45	61	177.25	131.35	106794.6	9.4	21.0	0.6	34260	31679	23334.0	6.73	-32.0	35.7
14:00	76	178.1	132.2	106937.6	9.5	21.1	0.6	35603	32931	24214.8	6.69	-69.4	37.5
14:15	91	176.7	130.8	107080.5	9.5	21.0	0.7	36247	33452	24650.0	6.72	-79.1	29.7
14:30	106	177.5	131.6	107223.4	9.5	21.0	0.7	36662	33834	24935.6	6.66	-82.7	17.4
14:45	121	176.3	130.4	107366.3	7.5	20.9	0.7	37024	34156	25173.6	6.64	-83.2	14.6
15:00	136	177.6	131.7	107508.9	9.5	21.0	0.7	37222	34370	25309.6	6.67	-82.2	8.63
15:15	151	178.2	132.3	107651.2	9.5	21.0	0.7	37434	34581	25459.2	6.69	-80.6	9.05
15:30	166	179.0	133.1	107793.6	9.5	21.0	0.8	37445	34601	25466.0	6.69	-80.5	21.6
15:45	181	179.3	133.4	107936.0	9.5	20.9	0.8	37708	34804	25642.8	6.67	-79.3	5.09
16:00	196	179.1	133.2	108078.4	9.5	20.9	0.8	37807	34902	25704.0	6.65	-77.6	3.80
16:15	211	179.0	133.1	108220.6	9.5	20.9	0.7	37890	34963	25772	6.64	-75.6	3.61
16:30	226	177.7	131.8	108362.1	9.4	20.9	0.7	37977	35004	25826.4	6.63	-73.7	2.31
16:37:57	234			108437.2	Pump off.								
					Total Volume pumped today = 2,218.3 gallons								

GEOSCIENCE

GEOSCIENCE Support Services, Inc.
P.O. Box 220, Claremont, CA 91711
Tel: (909) 451-6650 Fax: (909) 451-6638
www.gssiwater.com

CONFIDENTIAL
DRAFT
Subject to Revision

ISOLATED AQUIFER ZONE SAMPLING DATA SHEET

Zone No. 1

Client: RBF/MPWSP - Exploratory Borehole Drilling
Borehole Name/Number: CX-B4
Sonic Casing Dia: 8 in Sonic Casing Depth: 285 ft bgs
Static WL: 50.25 ft brp
RP: 7.5 stags (top of 8" casing)

Logged By: N. Reynolds (GSSI) & Cascade Drilling (W.L.'s)
Test Date: 4-5-14/Sat
Screened Interval: 306-316 ft bgs
Reference Point Elevation: _____ ft amsl
Pump Depth: 193.3 ft bgs (intake)

Time	Time Step (min)	Water Level (ft brp)	Drawdown (ft)	Totalizer (gal)	Pumping Rate (gpm)	Temp (°C)	DO (mg/L)	Specific Cond. (µS/cm)	Cond. (µS/cm)	TDS (mg/L) (0.68 constant)	pH	ORP (mV)	Turbitity (NTU)
7:48:43	0	50.25	0	108437.2	Pump on @ 9.8 gpm · 7:54 ↑Q to 8.0 gpm						(Q dropping)		2.0
8:04	15	129.6	79.35	108566.6	7.7								31.2
8:19	30	133.35	83.10	108681.7	7.7								3.78
8:34	45	134.3	84.05	108796.2	7.6								1.10
8:49	60	134.4	84.15	108910.5	7.6								0.94
9:04	75	135.9	85.65	109026.0	7.7	20.9	1.0	37568	34576	25547.6	6.58	77.3	1.19
9:19	90	138.4	88.15	109145.5	8.0	20.9	0.6	37587	34620	25561.2	6.63	-9.1	0.91
9:34	105	138.85	88.60	109264.9	8.0	20.8	0.6	37654	34619	25602.0	6.62	-28.9	0.63
9:49	120	139.80	89.55	109384.4	8.0	20.9	0.6	37641	34702	25595.2	6.61	-36.4	0.50
9:59	130	139.50	89.25	109464.1	8.0	20.9	0.6	37688	34754	25629.2	6.61	-38.4	0.54
10:00	131	Begin collecting Water samples for laboratory analysis. Samples placed on ice.											
10:28	159	140.60	90.35	109699.1	8.1	21.0	0.6	37646	34755	25602.0	6.61	-38.5	0.43
10:35	166	–	–	109754.5	Pump off.								
					Total Volume pumped today = 1317.3 gallons								
11:25	216	48.35	-1.90	recovered	W.L. after pulling pump.								

Flow thru cell = 1480.8 mL/min

Stabilization Criteria:

3 to 5 minute recordings with 3 consecutive readings within:

pH: +/- 0.1 unit
Cond: +/- 3%
ORP: +/- 10 mV
Turb: +/- 10%
DO: +/- 10%

Form Created: 29-Sep-13

GEOSCIENCE

GEOSCIENCE Support Services, Inc.
P.O. Box 220, Claremont, CA 91711
Tel: (909) 451-6650 Fax: (909) 451-6638
www.gssiwater.com

CONFIDENTIAL
DRAFT
Subject to Revision

ISOLATED AQUIFER ZONE SAMPLING DATA SHEET

Zone No. 2

Client: RBF/MPWSP - Exploratory Borehole Drilling

WL's taken using an electronic WL indicator.

Logged By: N. Reynolds (GSSI) & Cascade Drilling

Borehole Name/Number: CX-B4

Test Date: 4-6-14 / Sun

Sonic Casing Dia: 8 in Sonic Casing Depth: 236 ft bgs

Screened Interval: 248 - 258 ft bgs

Static WL: 45.25 ft brp

Reference Point Elevation: _____ ft amsl

RP: 6.7 ft ags (Top of 8" casing)

Pump Depth: 193.5 ft bgs (intake)

0.68 constant

Time	Time Step (min)	Water Level (ft brp)	Drawdown (ft)	Totalizer (gal)	Pumping Rate (gpm)	Temp (°C)	DO (mg/L)	Specific Cond. (µS/cm)	Cond. (µS/cm)	TDS (mg/L)	pH	ORP (mV)	Turbitity (NTU)	Tot Vol (gal)
09:27	0	45.25	0	109754.5	Pump on @ 8.7 gpm. 9:29 ↑Q to 14.4 gpm. 0932 ↑Q to 21. 3 gpm turbid									
09:35	8	74.25	29.00	109866.5	21.0						aerated.			
09:45	18	76.05	30.80	110076.5	21.0	Good zone.		Higher producing. Aerated.					35.1	
09:50	23				↓Q to 11.8 gpm. 0951 ↓Q to 10.6 gpm									
09:55	28	60.5	15.25	110233.2	10.7								10.8	
10:10	43	60.7	15.45	110395.1	10.8								1.12	
10:25	58	60.8	15.55	110557.3	10.8								0.41	
10:40	73	60.95	15.70											
10:45	78	61.00	15.75	110773.7	10.8								0.67	
11:00	93	61.45	16.20	110936.5	10.9	19.8	3.0	35439	31916	24099.2	6.58	117.0	3.61	1182.0
11:10	103	61.50	16.25	111047.5	11.1	19.7	2.2	35705	32106	24282.8	6.68	47.1	2.35	1293.0
11:20	113	61.60	16.35	111158.5	11.1	19.7	2.2	35944	32340	24446.0	6.68	20.4	2.83	1404.0
11:30	123	61.60	16.35	111269.4	11.1	19.8	2.2	36168	32575	24595.6	6.68	9.7	2.36	
11:45	138	61.60	16.35	111435.6	11.1	19.8	2.2	36450	32845	24792.8	6.68	2.7	2.55	
12:00	153	61.70	16.45	111601.8	11.1	19.8	2.2	36688	33053	24956.0	6.69	-0.9	1.89	
12:15	168	61.70	16.45	111767.8	11.1	19.8	2.3	36915	33269	25105.6	6.68	-0.7	2.48	2013.3
12:30	183	61.75	16.50	111933.7	11.1	19.8	2.3	37081	33434	25214.4	6.68	0.4	1.80	
12:45	198	61.75	16.50	112099.6	11.1	19.8	2.3	37210	33528	25309.6	6.70	1.8	2.34	
13:00	213	61.80	16.55	112265.5	11.1	19.8	2.3	37564	33851	25540.8	6.69	5.0	1.72	
13:15	228	61.80	16.55	112431.5	11.1	19.8	2.3	37658	33967	25608.8	6.74	3.9	2.25	

Stabilization Criteria:

3 to 5 minute recordings with 3 consecutive readings within:

pH: +/- 0.1 unit
Cond: +/- 3%
ORP: +/- 10 mV
Turb: +/- 10%
DO: +/- 10%

Flow thru cell = 1294.2 mL/min

Form Created: 29-Sep-13

GEOSCIENCE
GEOSCIENCE Support Services, Inc.
P.O. Box 220, Claremont, CA 91711
Tel: (909) 451-6650 Fax: (909) 451-6638
www.gssiwater.com

CONFIDENTIAL
DRAFT
Subject to Revision

ISOLATED AQUIFER ZONE SAMPLING DATA SHEET

Zone No. 2

Client: RBF/MPWSP - Exploratory Borehole Drilling
Borehole Name/Number: CX-B4
Sonic Casing Dia: 8 in Sonic Casing Depth: 236 ft bgs
Static WL: 45.25 ft brp
RP: 6.7 flags

Logged By: N. Reynolds (GSSI) & Cascade Drilling
Test Date: 4-6-14 / Sun
Screened Interval: 248-258 ft bgs
Reference Point Elevation: _____ ft amsl
Pump Depth: 193.5 ft bgs

0.68 constant

Time	Time Step (min)	Water Level (ft brp)	Drawdown (ft) (45.25)	Totalizer (gal)	Pumping Rate (gpm)	Temp (°C)	DO (mg/L)	Specific Cond. (µS/cm)	Cond. (µS/cm)	TDS (mg/L)	pH	ORP (mV)	Turbitity (NTU)	Tot Vol (gal)
									Some stabilization					
13:23	236	↓Q to 5.4 gpm												
13:30	243	53.60	8.35	112559.8	5.3	20.1	2.3	37738	34242	25663	6.71	3.6	1.89	
13:45	258	53.55	8.30	112641.5	5.4	20.2	2.2	37844	34410	25731.2	6.72	4.9	1.00	
14:00	273	53.55	8.30	112723.0	5.4	20.2	2.2	37882	34414	25758.4	6.74	0.3	2.16	
14:15	288	53.55	8.30	112804.6	5.4	20.2	2.2	37937	34493	25799.2	6.74	0.0	2.98	
14:25	298	↑Q to 21.6 gpm												
14:30	303	77.60	32.35	112962.9	21.2	19.6	2.3	37703	33824	25663.2	6.74	2.3	4.17	
14:45	318	77.70	32.45	113282.4	21.3	19.4	2.3	37947	33924	25806.0	6.70	10.1	2.71	3527.9
15:00	333	77.90	32.65	113602.2	21.3	19.5	2.4	38122	34087	25928.4	6.67	21.7	2.26	
15:15	348	78.00	32.75	113922.2	21.3	19.4	2.4	38213	34164	25987.8	6.66	28.1	1.88	4167.7
15:30	363	78.20	32.95	114242.6	21.4	19.4	2.4	38278	34205	26030.4	6.66	30.6	1.96	
15:45	378	78.30	33.05	114563.5	21.4	19.4	2.4	38324	34231	26057.6	6.66	34.0	1.70	
16:00	393	78.30	33.05	114884.3	21.4	19.4	2.5	38354	34291	26084.8	6.66	36.8	1.46	
16:05	398	Begin collecting WQ samples for laboratory analysis. Samples placed on ice.												
16:33	426	78.50	33.25	115594.2	21.5	19.4	2.5	38426	34384	26132.4	6.66	41.7	1.18	
16:39:48	433			115749.5	Pump off.									
					Total Volume pumped = 5995.0 gallons									
4/7 T:30		47.15												

Stabilization Criteria:

3 to 5 minute recordings with 3 consecutive readings within:

pH: +/- 0.1 unit
Cond: +/- 3%
ORP: +/- 10 mV
Turb: +/- 10%
DO: +/- 10%

Form Created: 29-Sep-13

GEOSCIENCE
GEOSCIENCE Support Services, Inc.
P.O. Box 220, Claremont, CA 91711
Tel: (909) 451-6650 Fax: (909) 451-6638
www.gssiwater.com

CONFIDENTIAL
DRAFT
Subject to Revision

ISOLATED AQUIFER ZONE SAMPLING DATA SHEET

Zone No. 3 (Day 1)

Client: RBF/MPWSP - Exploratory Borehole Drilling

WL's taken using an electronic WL indicator

Logged By: N. Reynolds (GSSI) & Cascade Drilling W.L.'s

Borehole Name/Number: CX-B4

Test Date: 4-7-14 / Mon

Sonic Casing Dia: 8 in Sonic Casing Depth: 144 ft bgs

Screened Interval: 155-165 ft bgs

Static WL: 42.05 ft brp

Reference Point Elevation: _____ ft amsl

RP: 6.0 ft ags (top of 8" casing)

Pump Depth: 142.0 ft bgs (intake)

0.68 constant

Time	Time Step (min)	Water Level (ft brp)	Drawdown (ft)	Totalizer (gal)	Pumping Rate (gpm)	Temp (°C)	DO (mg/L)	Specific Cond. (µS/cm)	Cond. (µS/cm)	TDS (mg/L)	pH	ORP (mV)	Turbitity (NTU)	Total Vol (gal)
13:48:28	0	42.05	0	115749.5	Pump	on @ ~	10gpm.	Turbid						
13:55	7	85.80	43.75	115815.2	9.9								overrange	
14:00	12	87.85	45.80	115864.7	9.9								466	
14:15	27	89.70	47.65	116011.9	9.8								148	
14:30	42	89.90	47.85	116159.5	9.8								143	
14:45	57	90.10	48.05	116307.0	9.8								18.1	
15:00	72	90.00	47.95	116454.7	9.8								3.97	
15:15	87	91.5	49.45	116603.6	9.9	19.1	4.7	27888	24761	18978.8	6.72	95.0	19.2	
15:30	102	91.6	49.55	116755.7	10.1	19.1	4.5	28361	25158	19284.8	6.77	46.6	2.90	1006.2
15:45	117	92.1	50.05	116908.1	10.2	19.1	4.6	28421	25214	19339.2	6.77	31.8	2.60	1158.6
16:00	132	92.05	50.00	117060.2	10.1	19.1	4.6	28527	25296	19400.4	6.78	25.1	3.36	1310.7
16:15	147	92.15	50.10	117212.3	10.1	19.1	4.6	28580	25347	19434.4	6.78	21.1	3.82	
16:30	162	92.10	50.05	117364.1	10.1	19.1	4.6	28609	25371	19454.8	6.78	17.9	2.71	
16:34:28	166			117419.2	Pump	off.								
				Total Volume	pumped	today=		1669.7	gallons					

Stabilization Criteria:

3 to 5 minute recordings with 3 consecutive readings within:

pH: +/- 0.1 unit
Cond: +/- 3%
ORP: +/- 10 mV
Turb: +/- 10%
DO: +/- 10%

28.03 mS/cm
5:42

Flow thru cell = 1419.1 mL/min

Form Created: 29-Sep-13

GEOSCIENCE
GEOSCIENCE Support Services, Inc.
P.O. Box 220, Claremont, CA 91711
Tel: (909) 451-6650 Fax: (909) 451-6638
www.gssiwater.com

CONFIDENTIAL
DRAFT
Subject to Revision

ISOLATED AQUIFER ZONE SAMPLING DATA SHEET

Zone No. 3 (Day 2) — WL's

Client: RBF/MPWSP - Exploratory Borehole Drilling — W.L.'s taken using an electronic WL indicator

Borehole Name/Number: CX-B4

Sonic Casing Dia: 8 in Sonic Casing Depth: 144 ft bgs

Static WL: 43.3 ft brp

RP: 6.0 flags (top of 8" casing)

Logged By: N. Reynolds (GSSI) & Cascade Drilling

Test Date: 4-8-14 (Tue)

Screened Interval: 155-165 ft bgs

Reference Point Elevation: _____ ft amsl

Pump Depth: 142.0 ft bgs (intake)

0.68 constant

Time	Time Step (min)	Water Level (ft brp)	Drawdown (ft)	Totalizer (gal)	Pumping Rate (gpm)	Temp (°C)	DO (mg/L)	Specific Cond. (µS/cm)	Cond. (µS/cm)	TDS (mg/L)	pH	ORP (mV)	Turbitity (NTU)	Tot Vol. (gal)
07:29:33	0	43.3	0	117419.2	Pump on @ 8.1 gpm. 7:32			↑Q to 10.8 gpm		Some aeration.				
07:45	15	92.2	48.9	117577.9	10.5								16.4	
08:00	30	93.4	50.1	117735.1	10.5								15.9	
08:15	45	93.4	50.1	117891.7	10.5								11.2	
08:30	60	92.9	49.6	118050.6	10.5								24.5	
08:45	75	94.3	51.0	118210.2	10.6	18.8	4.9	28822	25407	19618.0	6.67	123.0	19.3	
09:00	90	94.4	51.1	118373.0	10.9	18.8	4.7	28984	25548	19713.2	6.72	85.3	3,89	953.8
09:15	105	94.55	51.25	118536.0	10.9	18.8	4.7	28927	25515	19672.4	6.73	69.4	3.84	
09:30	120	94.55	51.25	118698.4	10.8	18.8	4.6	28849	25424	19618.0	6.74	56.6	2.53	
09:46	136	94.65	51.35	118871.9	10.8	18.8	4.5	28766	25375	19556.0	6.74	44.4	4.77	
10:00	150	94.55	51.25	119023.8	10.9	18.9	4.5	28717	25354	19529.6	6.74	36.6	5.78	
10:15	165	94.65	51.35	119186.8	10.9	18.9	4.5	28657	25321	19488.8	6.74	31.3	3,89	1767.6
10:31	181	94.65	51.35	119360.6	10.9	19.0	4.5	28643	25335	19475.2	6.74	28.7	6.05	
10:45	195	94.70	51.40	119512.8	10.9	19.0	4.5	28609	25326	19454.8	6.74	27.6	3.51	
11:00	210	94.85	51.55	119675.9	10.9	19.0	4.5	28599	25310	19448.0	6.74	27.3	5.02	
11:15	225	94.90	51.60	119839.0	10.9	19.0	4.5	28585	25335	19434.4	6.75	28.0	5.24	
11:30	240	95.00	51.70	120002.0	10.9	19.0	4.6	28574	25304	19427.6	6.75	28.5	4.04	2582.8
11:44:38	254	↓Q to 5.5 gpm			5.5									
11:45	255	84.40	41.10	120163.5	5.5	19.0	4.6	28577	25329	19434.4	6.75	28.7	2.58	2744.3
12:00	270	68.00	24.70	120248.2	5.6	19.4	4.5	28690	25629	19509.2	6.75	28.9	0.25	

Stabilization Criteria:

3 to 5 minute recordings with 3 consecutive readings within:

pH: +/- 0.1 unit
Cond: +/- 3%
ORP: +/- 10 mV
Turb: +/- 10%
DO: +/- 10%

Flow thru cell = 1329.8 mL/min

Form Created: 29-Sep-13

GEOSCIENCE
GEOSCIENCE Support Services, Inc.
P.O. Box 220, Claremont, CA 91711
Tel: (909) 451-6650 Fax: (909) 451-6638
www.gssiwater.com

CONFIDENTIAL
DRAFT
Subject to Revision

ISOLATED AQUIFER ZONE SAMPLING DATA SHEET

Zone No. 3 (Day 2)

Client: RBF/MPWSP - Exploratory Borehole Drilling
Borehole Name/Number: CX-B4
Sonic Casing Dia: 8 in Sonic Casing Depth: 144 ft bgs
Static WL: 43.3 ft brp
RP: 6.0 flags

Logged By: N. Reynolds (GSSI) & Cascade Drilling
Test Date: 4-8-14 / Tue
Screened Interval: 155-165 ft bgs
Reference Point Elevation: _____ ft amsl
Pump Depth: 142.0 ft bgs

Time	Time Step (min)	Water Level (ft brp)	Drawdown (ft)	Totalizer (gal)	Pumping Rate (gpm)	Temp (°C)	DO (mg/L)	Specific Cond. (µS/cm)	Cond. (µS/cm)	TDS (mg/L) (0.68 constant)	pH	ORP (mV)	Turbitity (NTU)
12:15	285	68.00	24.70	120330.6	5.5	19.4	4.5	28716	25672	19522.6	6.75	32.6	0.14
12:25	295	68.05	24.75	120385.5	5.5	19.4	4.5	28707	25663	19522.8	6.75	34.0	0.18
12:30	300	Begin collecting WQ samples for laboratory analysis. Samples placed on ice.											
12:50	320	68.20	24.90	120527.8	5.7	19.5	4.5	28695	25655	19509.2	6.74	36.1	0.15
12:53:04	323			120544.5	Pump off. Total volume pumped today = 3125.3 gallons								
13:27	357	43.85	0.55	← Recovered W.L after pulling pump.									

Stabilization Criteria:

3 to 5 minute recordings with 3 consecutive readings within:

pH: +/- 0.1 unit
Cond: +/- 3%
ORP: +/- 10 mV
Turb: +/- 10%
DO: +/- 10%

Form Created: 29-Sep-13

GEOSCIENCE

GEOSCIENCE Support Services, Inc.
P.O. Box 220, Claremont, CA 91711
Tel: (909) 451-6650 Fax: (909) 451-6638
www.gssiwater.com

CONFIDENTIAL DRAFT
Subject to Revision

ISOLATED AQUIFER ZONE SAMPLING DATA SHEET

Zone No. 4

Client: RBF/MPWSP - Exploratory Borehole Drilling

W.L.'s taken using an electronic W.L. indicator.

Logged By: N. Reynolds (GSSI) & Cascade Drilling

Borehole Name/Number: CX-B4

Test Date: 4-9-14 / Wed

Sonic Casing Dia: 8 in Sonic Casing Depth: 95.8 ft bgs

Screened Interval: 110-120 ft bgs

Static WL: 41.20 ft brp

Reference Point Elevation: _____ ft amsl

RP: 6.7 ft ags (top of 8" casing)

Pump Depth: 196 ft bgs

0.68 constant

Time	Time Step (min)	Water Level (ft brp)	Drawdown (ft)	Totalizer (gal)	Pumping Rate (gpm)	Temp (°C)	DO (mg/L)	Specific Cond. (µS/cm)	Cond. (µS/cm)	TDS (mg/L)	pH	ORP (mV)	Turbitity (NTU)	Total Vol (gal)
7:59:56	0	41.20	0	120544.6	Pump on @ 10.4 gpm. Brown/turbid. Good yield.									
08:03	3	45.40	4.20		Turbid but improving.									
08:15	15	45.45	4.25	120706.1	10.0	Milky/aerated.							39.0	
08:30	30	45.50	4.30	120856.6	10.0	"							16.0	
08:37:50	~38			120919.0	Pump off. Pump died.									
08:43	43	41.10	-0.10	Recovering W.L. 08:50 Begin pulling pump to check. Wires pinched.										
10:07:40	0	41.55	0.35	120913.1	Resume pumping @ 10.7 gpm. Q dropping slowly.									
10:15	7	44.50	3.30	120979.1	8.8								7.61	434.5
10:30	22	44.60	3.40	121110.7	8.8	19.0	4.8	29701	26333	20202.8	6.65	85.1	5.07	566.1
10:45	37	44.65	3.45	121243.2	8.8	19.0	4.9	29805	26405	20277.6	6.65	72.0	7.50	698.6
11:00	52	44.65	3.45	121375.8	8.8	19.0	5.0	29865	26428	20311.6	6.64	70.6	1.13	831.2
11:15	67	44.65	3.45	121508.7	8.9	19.0	5.0	29908	26473	20332.0	6.64	72.1	0.69	
11:25	77	44.65	3.45	121597.6	8.9	18.9	5.1	29926	26423	20352.4	6.64	72.8	0.58	
11:35	87	44.65	3.45	121686.3	8.9	18.9	5.1	29933	26466	20352.4	6.63	74.9	0.85	
11:40	92	Begin collecting WQ samples for lab analysis. Samples placed on ice.												
12:01	113	44.65	3.45	121922.3	9.1	18.9	5.1	29954	26471	20366.0	6.63	76.9	1.70	
12:07:04	119			121976.0	Pump off.									
					Total Volume pumped = 1431.4 gallons									
12:45	157	41.5	0.30	Recovered water level.										

Stabilization Criteria:

3 to 5 minute recordings with 3 consecutive readings within:

pH: +/- 0.1 unit
Cond: +/- 3%
ORP: +/- 10 mV
Turb: +/- 10%
DO: +/- 10%

Flow thru cell = 1306.6 mL/min

Form Created: 29-Sep-13

GEOSCIENCE
GEOSCIENCE Support Services, Inc.
P.O. Box 220, Claremont, CA 91711
Tel: (909) 451-6650 Fax: (909) 451-6638
www.gssiwater.com

· CONFIDENTIAL
DRAFT
Subject to Revision

ISOLATED AQUIFER ZONE SAMPLING DATA SHEET

Zone No. 5 (Day 1)

Client: RBF/MPWSP - Exploratory Borehole Drilling

W.L.'s taken using an electronic W.L. indicator.

Logged By: N. Reynolds (GSSI) & Cascade Drilling

Borehole Name/Number: CX-B4

Test Date: 4-9-14 / Wed

Sonic Casing Dia: 8 in Sonic Casing Depth: 45.7 ft bgs

Screened Interval: 58-68 ft bgs

Static WL: 42.20 ft brp

Reference Point Elevation: _____ ft amsl

RP: 7.4 ft ags (top of 8" casing)

Pump Depth: 57.5 ft bgs (intake)

0.68 constant

Time	Time Step (min)	Water Level (ft brp)	Drawdown (ft)	Totalizer (gal)	Pumping Rate (gpm)	Temp (°C)	DO (mg/L)	Specific Cond. (µS/cm)	Cond. (µS/cm)	TDS (mg/L)	pH	ORP (mV)	Turbitity (NTU)
16:18:15	0	42.20	0	121975.9	Pump	on @	7.5 gpm.	Turbid / brown.					
16:23	5	48.25	6.05	122019.0	7.5	Turbid but improving. Aerated.							
16:33	15	48.70	6.50	122094.2	7.5	19.8	3.3	5343	4828	3651.6	6.80	-33.8	130
16:48	30	48.80	6.60	122209.8	7.7	19.3	4.7	5834	5192	3978.0	7.02	-85.6	42.2
17:03	45	48.90	6.70	122324.9	7.7	19.1	5.5	6134	5442	4161.6	7.02	-70.8	23.8
17:07:04	49	-	-	122355.9	Pump	off.							
					Total	Volume	pumped =	380.0	gallons				

Stabilization Criteria: Note: 700 gal fresh water added during construction. Flow thru cell = 1173.7 mL/min

3 to 5 minute recordings with 3 consecutive readings within:

pH: +/- 0.1 unit
Cond: +/- 3%
ORP: +/- 10 mV
Turb: +/- 10%
DO: +/- 10%

16:59 5641

Form Created: 29-Sep-13

GEOSCIENCE
GEOSCIENCE Support Services, Inc.
P.O. Box 220, Claremont, CA 91711
Tel: (909) 451-6650 Fax: (909) 451-6638
www.gssiwater.com

CONFIDENTIAL
DRAFT
Subject to Revision

ISOLATED AQUIFER ZONE SAMPLING DATA SHEET

Zone No. 5 (Day 2) W.L.'s

Client: RBF/MPWSP - Exploratory Borehole Drilling
Borehole Name/Number: CX-B4
Sonic Casing Dia: 8 in Sonic Casing Depth: 45.7 ft bgs
Static WL: 42.20 ft brp
RP: 7.4 ft ags (top of 8" casing)

WL's taken using an electronic WL indicator.

Logged By: N. Reynolds (GSSI) & Cascade Drilling
Test Date: 4-10-14 / thru
Screened Interval: 58-68 ft bgs
Reference Point Elevation: _____ ft amsl
Pump Depth: 57.5 ft bgs (intake)

0.68 Constant

Time	Time Step (min)	Water Level (ft brp)	Drawdown (ft)	Totalizer (gal)	Pumping Rate (gpm)	Temp (°C)	DO (mg/L)	Specific Cond. (µS/cm)	Cond. (µS/cm)	TDS (mg/L)	pH	ORP (mV)	Turbitity (NTU)	Total Vol (gal)
07:14:11	0	42.20	0	122355.9	Pump on @		~5gpm.	07:20 ↑Q to	~7gpm		Clear/aerated.			
07:19	5	46.05	3.85	122399.7	~5						aerated		30.1	
07:24	10	48.20	6.00	122432.7	7.4						aerated		14.1	
07:29	15	48.20	6.00	122469.0	7.3						"	"	8.90	
07:46	32	48.25	6.05	122592.1	7.2						"	"	5.29	
08:00	46	48.30	6.10	122693.6	7.3						"	"	4.34	
08:15	61	48.30	6.10	122802.6	7.3						"	"	2.62	446.7
08:30	76	48.30	6.10	122911.8	7.3		discharge is aerated						1.98	555.9
08:45	91	48.65	6.45	123024.8	7.5	18.6	6.1	6789	5959	4617.2	6.91	25.1	1.84	
09:00	106	48.65	6.45	123140.0	7.7	18.7	6.2	6848	6022	4664.8	6.92	9.2	1.61	
09:15	121	48.70	6.50	123254.2	7.6	18.6	6.3	6856	6023	4664.8	6.93	9.7	1.75	898.3
09:30	136	48.70	6.50	123368.6	7.6	18.6	6.4	6884	6045	4685.2	6.93	13.8	1.62	
09:36	142				↓Q to 4.8 gpm									
09:40	146	46.0	3.80	123433.4	4.8	19.0	6.4	6911	6116	4705.6	6.93	16.0	1.16	1077.5
09:50	156	46.0	3.80	123480.5	4.7	19.0	6.3	6914	6127	4705.6	6.94	17.6	1.31	
10:00	166	46.0	3.80	123527.4	4.7	19.1	6.3	6922	6139	4712.4	6.95	18.6	1.32	
10:10	176	46.0	3.80	123574.3	4.7	19.1	6.3	6932	6154	4719.2	6.94	20.2	1.21	1218.4
10:20	186	46.0	3.80	123621.1	4.7	19.1	6.3	6951	6168	4726.0	6.93	21.6	1.21	
10:30	196	46.0	3.80	123668.1	4.7	19.1	6.4	6946	6159	4726.0	6.92	23.7	1.23	
10:40	206	46.0	3.80	123714.9	4.7	19.1	6.4	6944	6170	4726.0	6.92	24.8	1.23	

Stabilization Criteria:
3 to 5 minute recordings with 3 consecutive readings within:
pH: +/- 0.1 unit
Cond: +/- 3%
ORP: +/- 10 mV
Turb: +/- 10%
DO: +/- 10%

Flow thru cell = 1,400.6 mL/min

6708 8:00

Form Created: 29-Sep-13

GEOSCIENCE

GEOSCIENCE Support Services, Inc.
P.O. Box 220, Claremont, CA 91711
Tel: (909) 451-6650 Fax: (909) 451-6638
www.gssiwater.com

CONFIDENTIAL
DRAFT
Subject to Revision

ISOLATED AQUIFER ZONE SAMPLING DATA SHEET

Zone No. 5 (Day 2) WL's

Client: RBF/MPWSP - Exploratory Borehole Drilling

Borehole Name/Number: CX-B4

Sonic Casing Dia: 8 in Sonic Casing Depth: 45.7 ft bgs

Static WL: 42.20 ft brp

RP: 7.4 ft ags

Logged By: N. Reynolds (GSSI) & Cascade Drilling

Test Date: 4-10-14 / Thur

Screened Interval: 58-68 ft bgs

Reference Point Elevation: _____ ft amsl

Pump Depth: 57.5 ft bgs

0.68 constant

Time	Time Step (min)	Water Level (ft brp)	Drawdown (ft)	Totalizer (gal)	Pumping Rate (gpm)	Temp (°C)	DO (mg/L)	Specific Cond. (µS/cm)	Cond. (µS/cm)	TDS (mg/L)	pH	ORP (mV)	Turbitity (NTU)
10:50	216	46.0	3.80	123761.7	4.7	19.1	6.4	6978	6193	4732.8	6.92	25.7	1.17
11:00	226	46.0	3.80	123808.5	4.7	19.1	6.4	6970	6186	4732.8	6.92	26.5	1.24
11:07	233	Recalibrate Hach 2100Q. (3pt: 20, 100, & 800 NTU).											
11:15	241	46.0	3.80	123878.3	4.7	19.1	6.4	6967	6182	4739.6	6.92	27.7	1.21
11:25	251	46.0	3.80	123924.9	4.7	19.1	6.5	6988	6208	4760.0	6.92	28.3	1.12
11:30	256	Begin WQ sampling for lab analysis. Samples placed on ice.											
11:49	275	46.0	3.80	124042.5	4.9	19.1	6.6	7044	6258	4794.0	6.92	30.1	1.01
11:55:35	282			124073.2	Pump off.								
					Total volume pumped today =					1717.3 gallons			
12:26	312	42.25	0.05	Recovered water level.									

Stabilization Criteria:

3 to 5 minute recordings with 3 consecutive readings within:

pH: +/- 0.1 unit
Cond: +/- 3%
ORP: +/- 10 mV
Turb: +/- 10%
DO: +/- 10%
Desired Flow Rate: 100 to 500 mL/min

Form Created: 29-Sep-13

Zone #1 As Built

ISOLATED AQUIFER ZONE CONSTRUCTION

Zone No. 1

237 to 247 ft bgs

8" Sonic Casing to 226 ft bgs. Open annulus above upper bentonite seal.

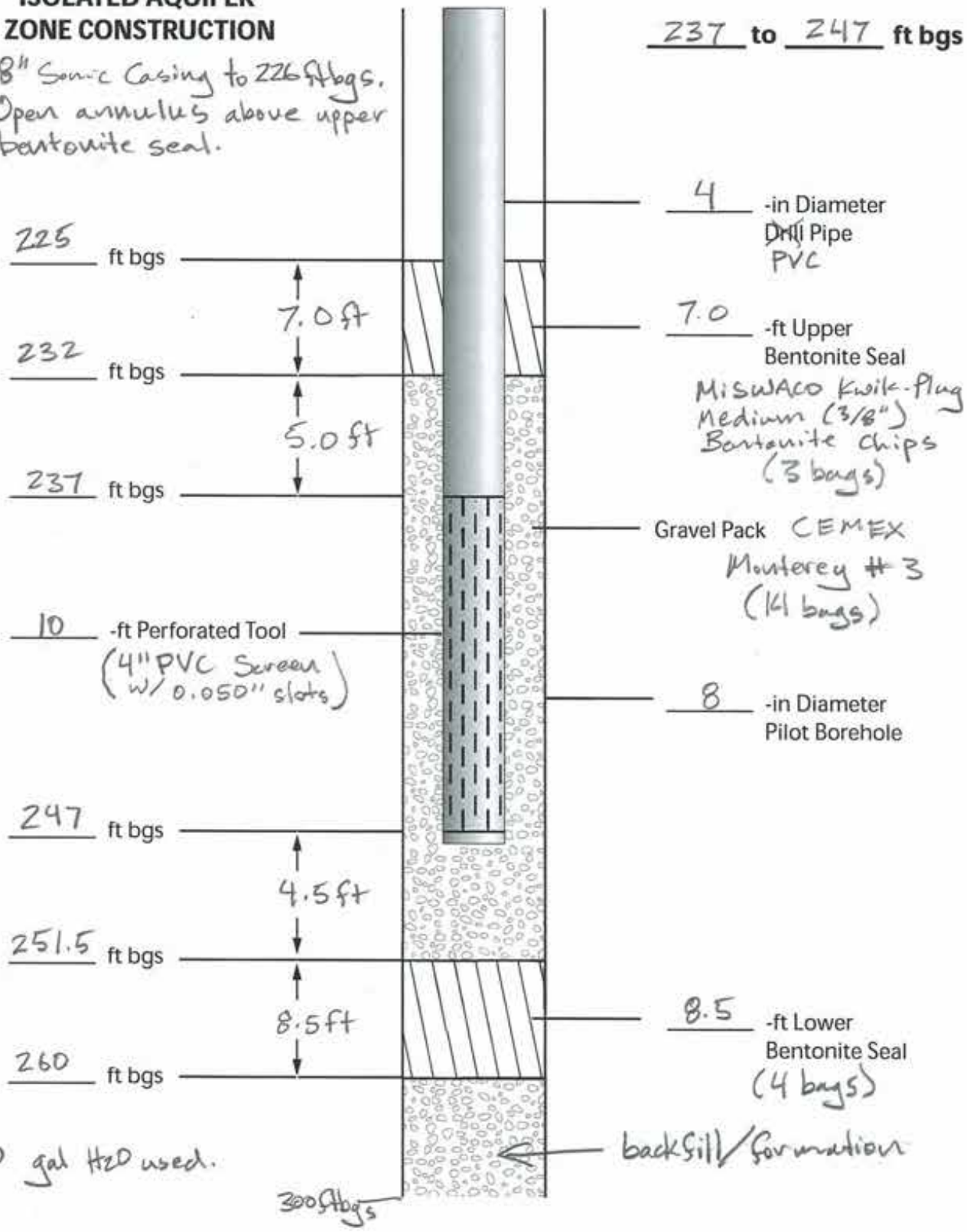

1000 gal H2O used.

GEOSCIENCE GEOSCIENCE Support Services, Incorporated P.O. Box 220, Claremont, CA 91711 Tel: (909) 451-6650 Fax: (909) 451-6638 www.gsiwater.com	Client: RBF Consulting Inc. Well Name/Number: MPWSP Exploratory Borehole MDW-1 Date: 4-30-14 / Wed

ISOLATED AQUIFER ZONE CONSTRUCTION

Zone #2 AS Built

Zone No. 2

187 to 197 ft bgs

8" Sonic Casing to 173 ftbgs. Open annulus above upper bentonite seal.

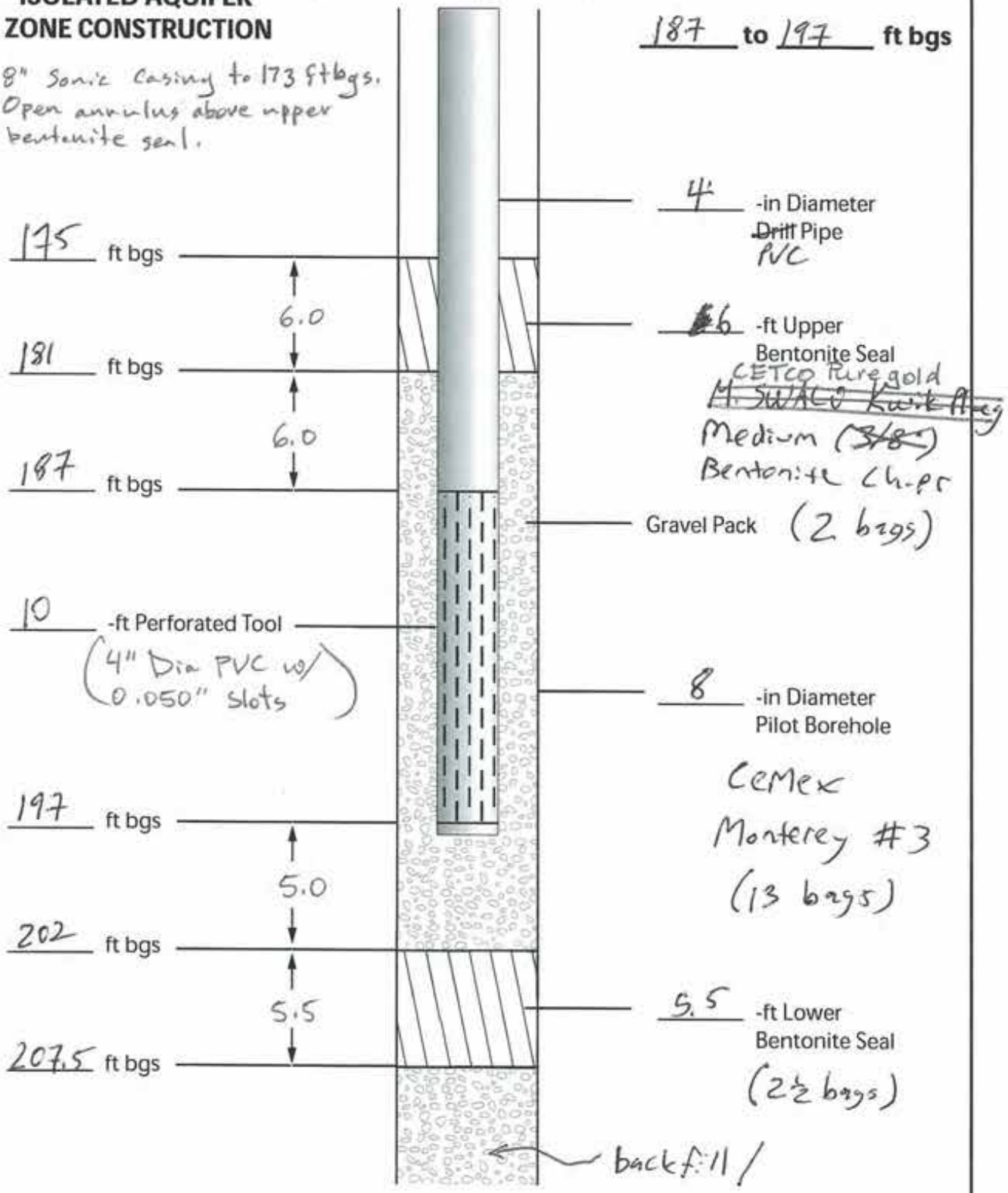

GEOSCIENCE

GEOSCIENCE Support Services, Incorporated
P.O. Box 220, Claremont, CA 91711
Tel: (909) 451-6650 Fax: (909) 451-6638
www.gsiwater.com

Client: RBF Consulting Inc

Well Name/Number: MPWSP Exploratory Borehole MW-1

Date: 5/6/17 Tuesday

Zone #3 As Built

ISOLATED AQUIFER ZONE CONSTRUCTION

Zone No. 3

152 to 162 ft bgs

8" sonic casing to 142 ftbgs.
Open annulus above upper bentonite seal.

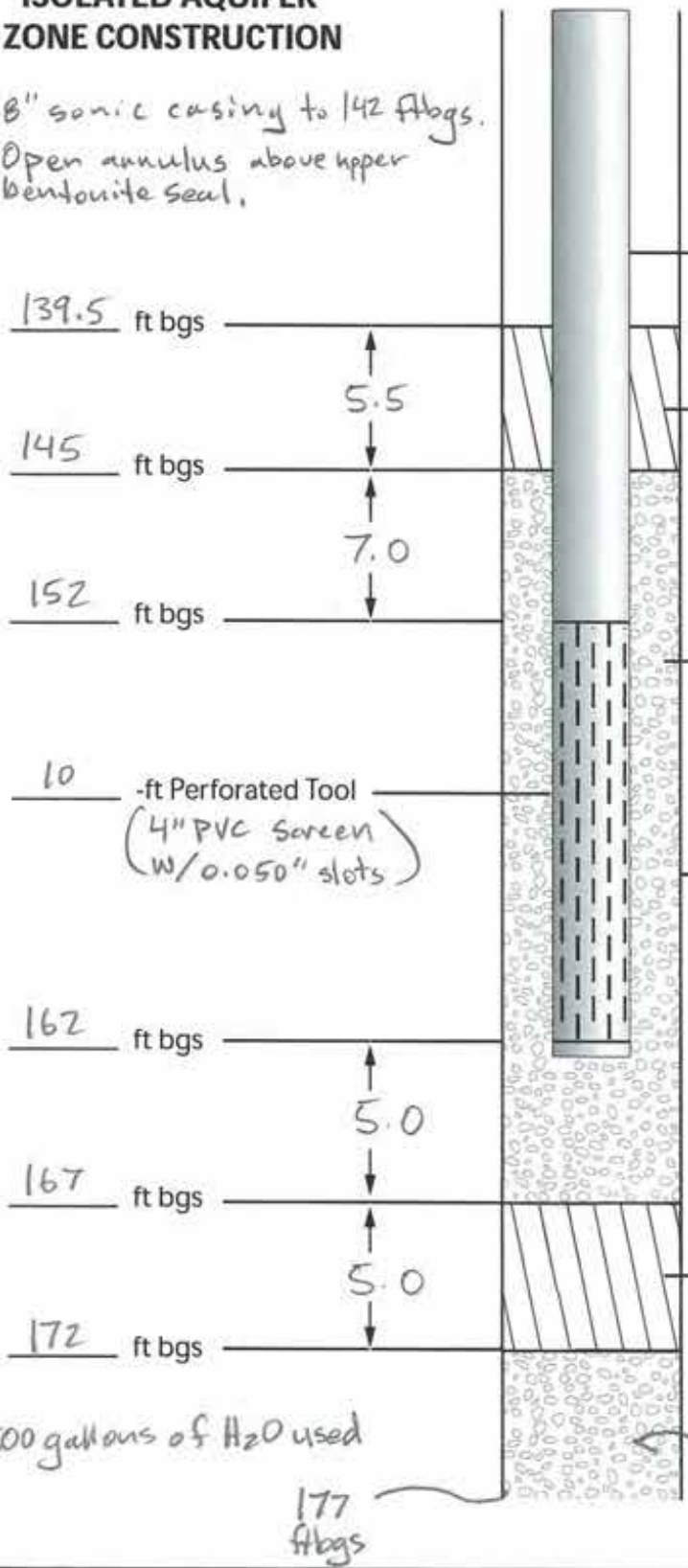

4 -in Diameter ~~Drill~~ PVC Pipe

139.5 ft bgs

5.5

5.5 -ft Upper Bentonite Seal
CETCO Puregold Medium ~~(30#)~~ Bentonite chips (2 bags)

145 ft bgs

7.0

152 ft bgs

Gravel Pack CEMEX Monterey #3 (14 bags)

10 -ft Perforated Tool (4" PVC Screen w/0.050" slots)

8 -in Diameter Pilot Borehole

162 ft bgs

5.0

167 ft bgs

5.0

5.0 -ft Lower Bentonite Seal (2 bags)

172 ft bgs

500 gallons of H_2O used

4 bags of Monterey #3

177 ftbgs

GEOSCIENCE GEOSCIENCE Support Services, Incorporated P.O. Box 220, Claremont, CA 91711 Tel: (909) 451-6650 Fax: (909) 451-6638 www.gsiwater.com	Client: RBF Consulting Inc. Well Name/Number: MPWSP Exploratory Borehole MDW-1 Date: 5-8-14 Thu

Zone # 4 As Built

ISOLATED AQUIFER ZONE CONSTRUCTION

Zone No. 4

60 to 70 ft bgs

9" sonic casing to 44 ftbgs. Open annulus above upper bentonite seal.

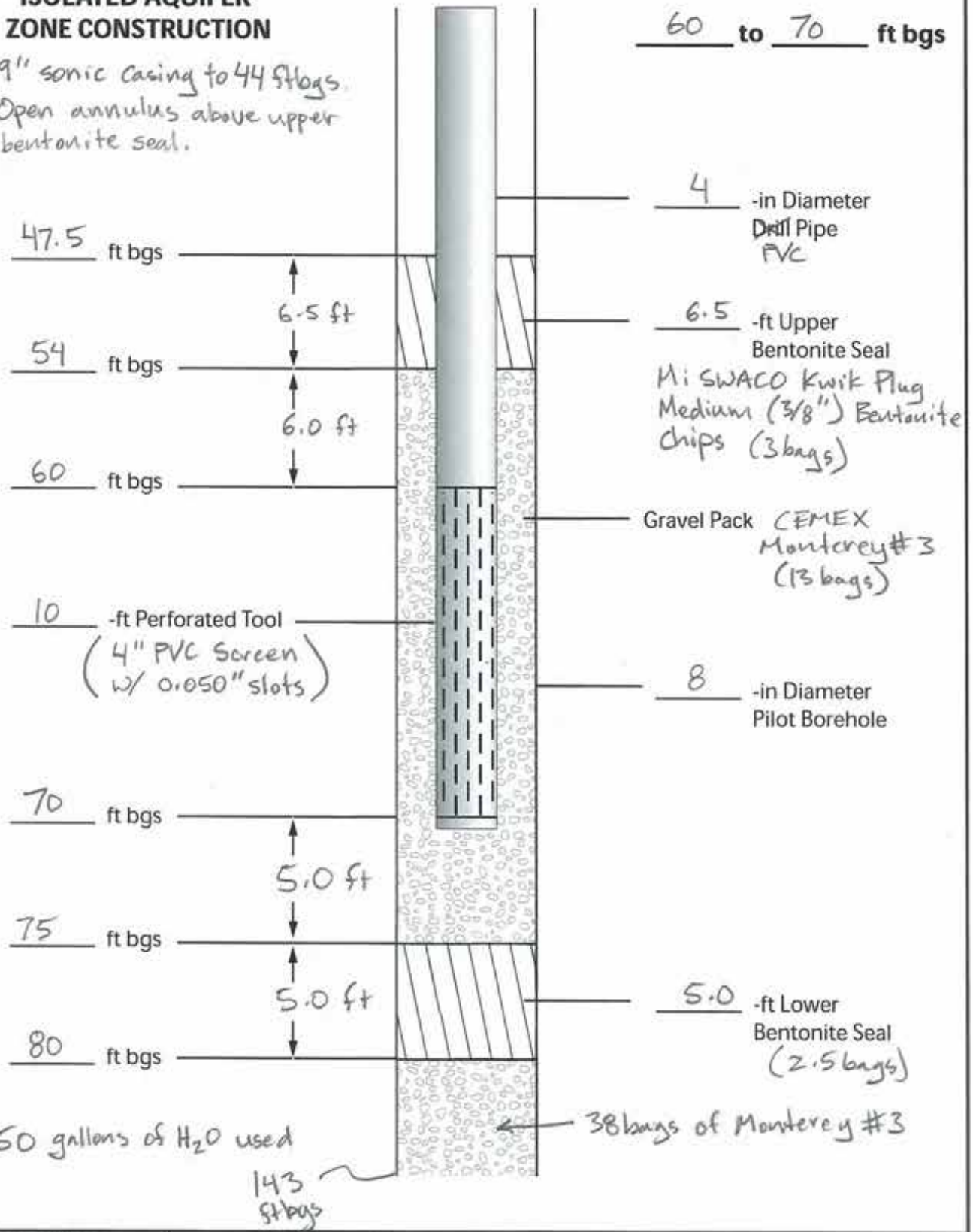

Mi SWACO Kwik Plug Medium (3/8") Bentonite chips (3 bags)

GEOSCIENCE

GEOSCIENCE Support Services, Incorporated
P.O. Box 220, Claremont, CA 91711
Tel: (909) 451-6650 Fax: (909) 451-6638
www.geoservices.com

Client: RBF Consulting Inc.

Well Name/Number: MPWSP Exploratory Borehole MPW-1

Date: 5-9-14 / Fri

GEOSCIENCE

GEOSCIENCE Support Services, Inc.
P.O. Box 220, Claremont, CA 91711
Tel: (909) 451-6650 Fax: (909) 451-6638
www.gssiwater.com

CONFIDENTIAL Day 1
DRAFT
Subject to Revision

ISOLATED AQUIFER ZONE SAMPLING DATA SHEET

Zone No. 1

Client: RBF/MPWSP - Exploratory Borehole Drilling
W.L.s taken w/ electronic W.L. indicator.
Borehole Name/Number: MDW-1
Sonic Casing Dia: 8 in Sonic Casing Depth: 226 ft bgs
Static WL: 26.05 ft brp (falling slowly)
RP: 7.2 ft ags (Top 8" casing)

Logged By: N. Reynolds (GSSI) & Cascade Drilling
Test Date: 4-30-14 / Wed (Day 1)
Screened Interval: 237-247 ft bgs
Reference Point Elevation: _____ ft amsl
Pump Depth: 226 ft bgs (intake)

Time	Time Step (min)	Water Level (ft brp)	Drawdown (ft)	Totalizer (gal)	Pumping Rate (gpm)	Temp (°C)	DO (mg/L)	Specific Cond. (µS/cm)	Cond. (~~µS/cm~~ mS/cm) Manual readings (Not YSI)	TDS (mg/L)	pH	ORP (mV)	Turbitity (NTU)	
15:21:01	0	26.05	0	124073.1	Pump	on @	? gpm	15:22	Pump off. Totalizer reversed.					
15:26:56	0	–	–	124054.6	Pump	on @ 10.8 gpm								
15:29	2	34.9	8.85	–	10.8	15:30:13 ↑Q to								
15:33	6	45.0	18.95	124143.0	18.7	turbid / brown								
15:38	11	46.3	20.25	124249.8	21.4	Water clearing, aerated		15:39:05	↑Q. Valve wide open.					
15:41	14	56.8	30.75	–	31.5	turbid								
15:44	17	57.6	31.55	124427.4	31.5	Some	brown	fine sand.					229	
16:00	33	58.55	32.50	124731.0	31.5				41.20	tr fine sand			33.3	894.9
16:15	48	58.80	32.75	125403.2	31.5				41.57				21.0	
16:30	63	58.90	32.85	125875.6	31.5				42.09				18.1	1839.5
16:45	78	59.00	32.95	126347.9	31.5				42.30				14.0	
17:00	93	59.05	33.00	126820.2	31.5				42.48				14.0	
17:06	99			127011.2	Pump off.									
				Total volume pumped today = 2975.1 gallons										

Stabilization Criteria:

3 to 5 minute recordings with 3 consecutive readings within:

pH: +/- 0.1 unit
Cond: +/- 3%
ORP: +/- 10 mV
Turb: +/- 10%
DO: +/- 10%

Form Created: 29-Sep-13

GEOSCIENCE

GEOSCIENCE Support Services, Inc.
P.O. Box 220, Claremont, CA 91711
Tel: (909) 451-6650 Fax: (909) 451-6638
www.gssiwater.com

CONFIDENTIAL
DRAFT
Subject to Revision

Day 2

ISOLATED AQUIFER ZONE SAMPLING DATA SHEET

Zone No. 1 — W.L's

Client: RBF/MPWSP - Exploratory Borehole Drilling

Borehole Name/Number: MDW-1

Sonic Casing Dia: 8 in Sonic Casing Depth: 226 ft bgs

Static WL: 28.00 ft brp

RP: 7.2 ft ags (top of 8" casing)

Logged By: N. Reynolds (GSSI) & Cascade Drilling

Test Date: 5-1-14 / Thu

Screened Interval: 237-247 ft bgs

Reference Point Elevation: _____ ft amsl

Pump Depth: 226 ft bgs (intake)

0.68 constant

Time	Time Step (min)	Water Level (ft brp)	Drawdown (ft)	Totalizer (gal)	Pumping Rate (gpm)	Temp (°C)	DO (mg/L)	Specific Cond. (µS/cm)	Cond. (µS/cm)	TDS (mg/L)	pH	ORP (mV)	Turbitity (NTU)
07:30:53	0	28.00	0	127010.6	Pump	on @	9.9 gpm						
07:34	3	35.40	7.40		9.9			Turbid. Aerated.					
07:45	14	35.25	7.25	127149.2	9.8								39.9
08:00	29	35.20	7.20	127295.4	9.7								17.6
08:15	44	35.15	7.15	127441.9	9.8								9.43
08:30	59	35.15	7.15	127588.3	9.8								5.76
08:45	74	35.15	7.15	127735.0	9.8								7.71
09:00	89	35.10	7.10	127882.1	9.8								5.83
09:15	104	35.10	7.10	128029.3	9.8								6.74
09:30	119	35.30	7.30	128180.1	10.1	17.4	0.2	42697	36454	29036.0	7.11	-13.9	6.84
09:45	134	35.25	7.25	128333.7	10.2	17.4	0.2	42742	36529	29063.2	7.14	-42.1	6.82
10:00	149	35.20	7.20	128486.7	10.2	17.3	0.2	42773	36481	29083.6	7.13	-57.2	6.33
10:15	164	35.10	7.10	128639.7	10.2	17.3	0.2	42789	36510	29097.2	7.13	-67.8	3.22
10:30	179	35.00	7.00	128792.9	10.2	17.3	0.2	42807	36496	29110.8	7.13	-75.5	5.65
10:45	194	34.95	6.95	128946.8	10.3	17.3	0.2	42817	36505	29117.6	7.12	-81.2	5.89
11:00	209	34.90	6.90	129100.1	10.2	17.3	0.2	42831	36556	29124.4	7.13	-85.6	4.42
11:15	224	34.85	6.85	129253.5	10.2	17.3	0.2	42840	36577	29131.2	7.13	-89.1	4.71
11:22:18	231	↑Q to	15.7 gpm.										
11:30	239	39.75	11.75	129438.6	15.7	17.1	0.2	42879	36414	29158.4	7.13	-91.7	12.1
11:45	254	39.90	11.90	129674.5	15.7	17.1	0.2	42868	36416	29151.6	7.13	-92.2	5.05

Stabilization Criteria:

3 to 5 minute recordings with 3 consecutive readings within:

pH: +/- 0.1 unit
Cond: +/- 3%
ORP: +/- 10 mV
Turb: +/- 10%
DO: +/- 10%

Flow thru cell = 1498.5 mL/min

Desired Flow Rate: 100 to 500 mL/min

Form Created: 29-Sep-13

GEOSCIENCE
GEOSCIENCE Support Services, Inc.
P.O. Box 220, Claremont, CA 91711
Tel: (909) 451-6650 Fax: (909) 451-6638
www.gssiwater.com

CONFIDENTIAL
DRAFT
Subject to Revision

Day 2

ISOLATED AQUIFER ZONE SAMPLING DATA SHEET

Zone No. 1

W.L.'s

Client: RBF/MPWSP - Exploratory Borehole Drilling
Borehole Name/Number: MDW-1
Sonic Casing Dia: 8 in Sonic Casing Depth: 226 ft bgs
Static WL: 28.00 ft brp
RP: 7.2 ft ags (top of 8" casing)

Logged By: N. Reynolds (GSSI) & Cascade Drilling
Test Date: 5-1-14 / Thu
Screened Interval: 237-247 ft bgs
Reference Point Elevation: _____ ft amsl
Pump Depth: 226 ft bgs

0.68 constant

Time	Time Step (min)	Water Level (ft brp)	Drawdown (ft)	Totalizer (gal)	Pumping Rate (gpm)	Temp (°C)	DO (mg/L)	Specific Cond. (µS/cm)	Cond. (µS/cm)	TDS (mg/L)	pH	ORP (mV)	Turbitity (NTU)
12:00	269	39.75	11.75	129909.8	15.7	17.1	0.2	42864	36394	29144.8	7.13	-94.1	3.66
12:15	284	39.65	11.65	130144.7	15.7	17.1	0.2	42862	36389	29144.8	7.12	-96.1	4.98
12:30	299	39.65	11.65	130380.6	15.7	17.1	0.2	42853	36383	29138.2	7.12	-98.0	3.26
12:45	314	39.60	11.60	130617.5	15.8	17.0	0.2	42856	36342	29144.8	7.11	-100.2	2.79
13:00	329	39.40	11.40	130853.5	15.7	17.1	0.2	42845	36382	29138.0	7.12	-101.4	2.35
13:15	344	39.35	11.35	131087.8	15.6	17.1	0.2	42841	36363	29131.2	7.12	-102.7	1.80
13:30	359	39.30	11.30	131322.5	15.6	17.1	0.2	42836	36397	29124.4	7.12	-103.9	1.50
13:45	374	39.45	11.45	131557.2	15.6	17.1	0.2	42826	36400	29124.4	7.12	-105.1	1.79
14:00	389	39.25	11.25	131793.1	15.7	17.1	0.2	42819	36386	29117.6	7.12	-106.2	1.53
14:15	404	39.40	11.40	132027.9	15.7	17.1	0.2	42813	36351	29110.8	7.12	-107.3	2.49
14:30	419	39.45	11.45	132264.8	15.8	17.1	0.2	42811	36322	29110.8	7.12	-108.0	2.28
14:45	434	39.45	11.45	132501.8	15.8	17.1	0.2	42802	36328	29104.0	7.12	-107.6	1.96
15:00	449	39.45	11.45	132738.8	15.8	17.0	0.2	42797	36307	29104.0	7.12	-107.6	2.22
15:15	464	39.45	11.45	132976.0	15.8	17.0	0.2	42787	36295	29097.2	7.12	-107.6	1.95
15:30	479	39.45	11.45	133212.5	15.8	17.1	0.2	42788	36308	29097.2	7.12	-107.5	2.33
15:45	494	39.50	11.50	133449.2	15.8	17.0	0.2	42787	36237	29097.2	7.12	-107.6	2.33
15:56	499	Begin collecting WQ samples for lab analysis. Samples placed on ice.											
16:15	524	39.45	11.45	133927.1	15.9	17.0	0.2	42777	36216	29090.4	7.11	-108.0	1.95
16:22:18	531			134041.7	Pump off.								
					Total volume pumped today = 7031.1 gallons								

Stabilization Criteria:

3 to 5 minute recordings with 3 consecutive readings within:

pH: +/- 0.1 unit
Cond: +/- 3%
ORP: +/- 10 mV
Turb: +/- 10%
DO: +/- 10%
Desired Flow Rate: 100 to 500 mL/min

Form Created: 29-Sep-13

GEOSCIENCE
GEOSCIENCE Support Services, Inc.
P.O. Box 220, Claremont, CA 91711
Tel: (909) 451-6650 Fax: (909) 451-6638
www.gssiwater.com

CONFIDENTIAL
DRAFT
Subject to Revision

ISOLATED AQUIFER ZONE SAMPLING DATA SHEET

Pag 1

Zone No. 2 (187-197 ft bgs)

Client: RBF/MPWSP - Exploratory Borehole Drilling
Borehole Name/Number: MDW-1
Sonic Casing Dia: 8 in Sonic Casing Depth: 173 ft bgs
Static WL: 26.24 ft brp
RP: 7 ft agl

Logged By: J. Sobolow (655I) & Cascade Drilling - WCS
Test Date: 5/6/19 / Tuesday
Screened Interval: 187-197 ft bgs
Reference Point Elevation: _____ ft amsl
Pump Depth: 173 ft bgs

0.68 Constant

Time	Time Step (min)	Water Level (ft brp) Pump	Drawdown (ft)	Totalizer (gal)	Pumping Rate (gpm)	Temp (°C)	DO (mg/L)	Specific Cond. (µS/cm)	Cond. (µS/cm)	TDS (mg/L)	pH	ORP (mV)	Turbitity (NTU)	Vol (mL/min)
1433	0	26.02	0	134041.7										
1435	2	27.70	1.68	134080.5	19.4									
1439	6	28.80	2.78	134136.2	13.93									
1443	10	29.10	3.08	134213.9	19.43								139/21	
1503	30	29.15	3.13	134618.4	20.23	16.5	0.4	43281	36227	29444	6.81	-53.5	12.2	1200
1518	45	29.15	3.13	134923.3	20.33	16.3	0.2	44131	36836	30015.20	6.82	-71.5	8.92	
1533	60	29.05	3.03	135228.4	20.34	16.3	0.3	44601	37196	30328	6.82	-79.6	7.01	
1548	75	29.00	2.98	135534.9	20.43	16.2	0.2	44797	37296	30464	6.82	-85.3	6.04	1000
1603	90	28.95	2.93	135841.2	20.43	16.2	0.1	44869	37378	30370.8	6.82	-90.6	4.90	1500
1618	105	28.90	2.88	136149.8	20.57	16.1	0.1	45152	37454	30702	6.83	-94.1	3.52	1360
1620	Pump off			136216.5										

Q1

Stabilization Criteria:

3 to 5 minute recordings with 3 consecutive readings within:

pH: +/- 0.1 unit
Cond: +/- 3%
ORP: +/- 10 mV
Turb: +/- 10%
DO: +/- 10%

Flow through cell!

Form Created: 29-Sep-13

GEOSCIENCE

GEOSCIENCE Support Services, Inc.
P.O. Box 220, Claremont, CA 91711
Tel: (909) 451-6650 Fax: (909) 451-6638
www.gssiwater.com

CONFIDENTIAL
DRAFT
Subject to Revision

ISOLATED AQUIFER ZONE SAMPLING DATA SHEET

Zone No. 2 (WCS Day 2)

Client: RBF/MPWSP - Exploratory Borehole Drilling

Borehole Name/Number: MDW-1

Sonic Casing Dia: 8 in Sonic Casing Depth: 173 ft bgs

Static WL: 26.20 ft brp

RP: 7.0 ft ags (top of 8" casing)

W.L.'s taken using an electronic WL indicator.

Logged By: N. Reynolds (GSSI) & Cascade Drilling

Test Date: 5-7-14 / Wed

Screened Interval: 187 - 197 ft bgs

Reference Point Elevation: _____ ft amsl

Pump Depth: 173 ft bgs

0.68 constant

Time	Time Step (min)	Water Level (ft brp)	Drawdown (ft)	Totalizer (gal)	Pumping Rate (gpm)	Temp (°C)	DO (mg/L)	Specific Cond. (µS/cm)	Cond. (µS/cm)	TDS (mg/L)	pH	ORP (mV)	Turbitity (NTU)	Total Vol (gal)
7:50:35	0	26.20	0	136216.5	Pump	on @	10.2 ppm						turbid	
7:55	5	-	-	136280.9	10:56	↓ Q slightly to	9.5 gpm						125	
8:05	15	27.30	1.10	136374.5	9.1	Aerated							3.96	
8:20	30	27.40	1.20	136511.1	9.1	"	"						3.11	
8:35	45	27.45	1.25	136648.2	9.1								3.80	
8:50	60	27.50	1.30	136785.5	9.2								3.04	
9:05	75	27.55	1.35	136922.6	9.1	16.3	1.7	45594	38005	31008.0	6.62	-14.7	1.95	706.1
9:20	90	27.65	1.45	137062.4	9.3	16.3	0.1	45626	38019	31028.4	6.78	-62.3	1.92	845.9
9:35	105	27.70	1.50	137202.8	9.4	16.3	0.1	45633	38044	31028.4	6.80	-79.7	1.98	
9:50	120	27.75	1.55	137343.5	9.4	16.3	0.1	45684	38094	31062.4	6.80	-86.9	1.84	
10:05	135	27.80	1.60	137483.6	9.3	16.3	0.1	45724	38136	31089.6	6.80	-91.0	1.50	
10:20	150	27.85	1.65	137623.6	9.3	16.3	0.1	45736	38180	31096.4	6.80	-93.9	2.57	
10:35	165	27.90	1.70	137763.8	9.3	16.3	0.1	45750	38166	31110.0	6.80	-96.0	1.72	
10:50	180	27.95	1.75	137903.9	9.3	16.3	0.1	45765	38171	31116.8	6.80	-97.7	1.68	
11:05	195	28.00	1.80	138044.1	9.3	16.3	0.1	45776	38221	31130.4	6.80	-99.0	1.87	
11:20	210	28.00	1.80	138184.4	9.4	16.3	0.1	45790	38227	31137.2	6.80	-100.1	1.80	
11:35	225	28.05	1.85	138324.7	9.4	16.3	0.1	45802	38239	31144.0	6.80	-101.1	1.58	2108.2
11:50	240	28.05	1.85	138465.0	9.4	16.4	0.1	45806	38281	31149.0	6.80	-102.1	1.68	
12:05	255	28.05	1.85	138605.2	9.3	16.4	0.1	45812	38278	31150.8	6.80	-103.1	1.61	
12:10:36	260				↓ Q to	5.4 gpm								

Stabilization Criteria:

3 to 5 minute recordings with 3 consecutive readings within:

pH: +/- 0.1 unit
Cond: +/- 3%
ORP: +/- 10 mV
Turb: +/- 10%
DO: +/- 10%
Desired Flow Rate: 100 to 500 mL/min

Flow thru cell = 1099.7 mL/min

Form Created: 29-Sep-13

GEOSCIENCE

GEOSCIENCE Support Services, Inc.
P.O. Box 220, Claremont, CA 91711
Tel: (909) 451-6650 Fax: (909) 451-6638
www.gssiwater.com

CONFIDENTIAL
DRAFT
Subject to Revision

ISOLATED AQUIFER ZONE SAMPLING DATA SHEET

Zone No. 2 Day 2

Client: RBF/MPWSP - Exploratory Borehole Drilling
Borehole Name/Number: MDW-1
Sonic Casing Dia: 8 in Sonic Casing Depth: 173 ft bgs
Static WL: 26.20 ft brp
RP: 7.0 flags

Logged By: N. Reynolds (GSSI)
Test Date: 3-7-14 / Thu
Screened Interval: 187-197 ft bgs
Reference Point Elevation: _____ ft amsl
Pump Depth: 173 ft bgs

Time	Time Step (min)	Water Level (ft brp)	Drawdown (ft)	Totalizer (gal)	Pumping Rate (gpm)	Temp (°C)	DO (mg/L)	Specific Cond. (µS/cm)	Cond. (µS/cm)	TDS (mg/L) (0.68 constant)	pH	ORP (mV)	Turbitity (NTU)	Total Vol (gal)
12:20	270	27.60	1.40	138712.8	5.4	16.7	0.1	45813	38609	31150.8	6.80	-105.3	2.59	
12:35	285	27.60	1.40	138791.6	5.3	16.8	0.1	45841	38653	31171.2	6.81	-105.6	2.84	
12:42:05	292	–	–	138828.1	Pump shuts off. Stop to fix generator.									
13:07:13	317	–	–	138828.1	Resume pumping @ 6.9 gpm.									
13:15	325	27.60	1.40	138858.5	7.2	16.7	0.1	45859	38636	31178.0	6.81	-99.4	3.85	
13:30	340	27.60	1.40	138996.5	7.2	16.8	0.1	45854	38686	31178.0	6.81	-102.0	2.40	
13:45	355	27.55	1.35	139104.5	7.2	16.8	0.1	46862	38716	31184.8	6.80	-103.9	2.37	
14:00	370	27.50	1.30	139212.2	7.2	16.8	0.1	45873	38728	31191.6	6.80	-104.9	0.68	
14:10	380	27.45	1.25	139284.1	7.2	16.8	0.1	45882	38735	31198.4	6.80	-105.5	0.51	
14:20	390	27.40	1.20	139356.0	7.2	16.8	0.2	45875	38793	31198.4	6.80	-106.0	0.64	
14:25	395	Begin collecting WQ samples for laboratory analysis. Samples placed on ice.												
14:44	414	27.30	1.10	139533.3	7.4	16.8	0.2	45896	38714	31205.2	6.80	-106.6	0.30	
14:48:26	418			139565.3	Pump off.									
					Total Volume pumped today = 3348.8 gallons									

Flow thru cell = 1191.4 mL/min (13:13)

Stabilization Criteria:

3 to 5 minute recordings with 3 consecutive readings within:

pH: +/- 0.1 unit
Cond: +/- 3%
ORP: +/- 10 mV
Turb: +/- 10%
DO: +/- 10%
Desired Flow Rate: 100 to 500 mL/min

Form Created: 29-Sep-13

GEOSCIENCE
GEOSCIENCE Support Services, Inc.
P.O. Box 220, Claremont, CA 91711
Tel: (909) 451-6650 Fax: (909) 451-6638
www.gssiwater.com

CONFIDENTIAL
DRAFT
Subject to Revision

ISOLATED AQUIFER ZONE SAMPLING DATA SHEET

Zone No. 3

Client: RBF/MPWSP - Exploratory Borehole Drilling

Borehole Name/Number: MPW-1

Sonic Casing Dia: 8 in Sonic Casing Depth: 142 ft bgs

Static WL: 28.25 ft brp

RP: 7.9 flags (top of 8" casing)

W.L's taken w/ an electronic W.L. indicator.

Logged By: N. Reynolds (GSSI) & Cascade Drilling

Test Date: 5-8-14 / Thu

Screened Interval: 152 - 162 ft bgs

Reference Point Elevation: _____ ft amsl

Pump Depth: 142 ft bgs

W.L's

D.68 constant

Time	Time Step (min)	Water Level (ft brp)	Drawdown (ft)	Totalizer (gal)	Pumping Rate (gpm)	Temp (°C)	DO (mg/L)	Specific Cond. (µS/cm)	Cond. (µS/cm)	TDS (mg/L)	pH	ORP (mV)	Turbitity (NTU)
11:40:28	0	28.25	0	139565.4	Pump on @	12.1 gpm							
11:43	3	53.0	24.75	-	12.1	grey	turbid	11:45:30 ↑Q	to 21.6 gpm				
11:48	8	77.00	48.75	-	21.6								
11:55	15	84.85	56.60	139827.7	21.5								107
12:12	32	86.05	57.80	140192.8	21.5		(W.L.@	12:10)					13.0
12:25	45	86.95	58.70	140472.1	21.5								9.02
12:40	60	87.30	59.05	140794.5	21.5								5.07
12:55	75	87.60	59.35	141116.7	21.5								3.91
13:10	90	88.00	59.75	141438.7	21.5								3.30
13:25	105	88.20	59.95	141760.3	21.4								2.40
13:40	120	88.90	60.65	142082.6	21.5	16.1	0.2	36220	30067	24629.6	6.84	-73.4	2.33
13:55	135	89.00	60.75	142406.6	21.6	16.1	0.2	36462	30250	24779.2	6.91	-102.4	1.77
14:05	145	-	-	142622.4	21.6	16.1	0.1	36521	30316	24867.6	6.91	-110.6	1.39
14:10	150	89.10	60.85	142730.3	21.6	16.1	0.1	36583	30336	24881.2	6.91	-113.2	1.35
14:25	165	89.10	60.85	143053.7	21.6	16.1	0.1	36728	30472	24969.6	6.91	-118.6	1.00
14:40	180	89.25	61.00	143378.0	21.6	16.1	0.1	36826	30554	25078.4	6.91	-122.1	1.05
14:55	195	89.20	60.95	143701.8	21.6	16.1	0.1	36953	30670	25119.2	6.91	-124.6	1.22
15:10	210	89.25	61.00	144025.6	21.6	16.0	0.1	37063	30733	25214.4	6.91	-126.4	0.95
15:20	220	89.30	61.05	144241.6	21.6	16.0	0.1	37132	30745	25228.0	6.91	-127.2	0.93
15:30	230	89.20	60.95	144457.6	21.6	16.0	0.1	37196	30803	25309.6	6.91	-128.1	1.14

Stabilization Criteria:

3 to 5 minute recordings with 3 consecutive readings within:

pH: +/- 0.1 unit
Cond: +/- 3%
ORP: +/- 10 mV
Turb: +/- 10%
DO: +/- 10%
Desired Flow Rate: 100 to 500 mL/min

Flow thru cell = 1290.9 mL/min

36.34

got highest reading

Form Created: 29-Sep-13

GEOSCIENCE

GEOSCIENCE Support Services, Inc.
P.O. Box 220, Claremont, CA 91711
Tel: (909) 451-6650 Fax: (909) 451-6638
www.gssiwater.com

CONFIDENTIAL
DRAFT
Subject to Revision

ISOLATED AQUIFER ZONE SAMPLING DATA SHEET

Zone No. 3

Client: RBF/MPWSP - Exploratory Borehole Drilling
Borehole Name/Number: MDW-1
Sonic Casing Dia: 8 in Sonic Casing Depth: 142 ft bgs
Static WL: 28.25 ft brp
RP: T.9 ft ags

Logged By: N. Reynolds (GSSI) & Cascade Drilling
Test Date: 5-8-14 / thru
Screened Interval: 152 - 162 ft bgs
Reference Point Elevation: _____ ft amsl
Pump Depth: 142 ft bgs

0.68 constant

Time	Time Step (min)	Water Level (ft brp)	Drawdown (ft)	Totalizer (gal)	Pumping Rate (gpm)	Temp (°C)	DO (mg/L)	Specific Cond. (µS/cm)	Cond. (µS/cm)	TDS (mg/L)	pH	ORP (mV)	Turbitity (NTU)
15:40	240	89.25	61.00	144673.3	21.6	16.0	0.1	37247	30853	25323.2	6.91	-128.8	2.40
15:50	250	89.30	61.05	144889.2	21.6	16.0	0.1	37260	30885	25330.0	6.91	-129.3	1.70
16:00	260	89.35	61.10	145105.0	21.6	16.0	0.1	37344	30916	25377.6	6.91	-129.3	1.95
16:10	270	89.50	61.25	145320.7	21.6	16.0	0.1	37363	30928	25404.8	6.91	-129.2	0.98
16:20	280	89.25	61.00	145536.6	21.6	15.9	0.1	37414	30941	25432.0	6.91	-129.7	2.82
16:30	290	89.20	60.95	145752.3	21.6	15.9	0.1	37451	30928	25459.2	6.91	-130.4	1.30
16:40	300	89.30	61.05	145968.2	21.6	15.9	0.1	37515	30985	25479.6	6.90	-131.2	0.78
16:50	310	89.25	61.00	146184.0	21.6	15.9	0.1	37546	31014	25513.6	6.90	-131.8	0.84
16:55	315	Begin collecting WQ samples for lab analysis. Samples placed on ice.											
17:10	330	89.25	61.00	146618.1	21.7	15.9	0.1	37642	31053	25595.2	6.90	-132.4	1.37
17:15:45	336			146740.4	Pump off.								
					Total volume pumped = 7,175 gallons								
5/9 07:30		28.80	0.55										

Stabilization Criteria:

3 to 5 minute recordings with 3 consecutive readings within:

pH: +/- 0.1 unit
Cond: +/- 3%
ORP: +/- 10 mV
Turb: +/- 10%
DO: +/- 10%
Desired Flow Rate: 100 to 500 mL/min

Form Created: 29-Sep-13

GEOSCIENCE

GEOSCIENCE Support Services, Inc.
P.O. Box 220, Claremont, CA 91711
Tel: (909) 451-6650 Fax: (909) 451-6638
www.gssiwater.com

CONFIDENTIAL
DRAFT
Subject to Revision

ISOLATED AQUIFER ZONE SAMPLING DATA SHEET

Day 1

Zone No. 4 — W.L.'s

Client: RBF/MPWSP - Exploratory Borehole Drilling — W.L.'s taken w/an electronic W.L. indicator.

Logged By: N. Reynolds (GSSI) & Cascade Drilling

Borehole Name/Number: MDW-1

Test Date: 5-9-14 / Fri

Sonic Casing Dia: 9 in — Sonic Casing Depth: 44 ft bgs

Screened Interval: 60 - 70 ft bgs

Static WL: 20.70 ft brp

Reference Point Elevation: _____ ft amsl

RP: 6.0 ft ags (top of 9" casing)

Pump Depth: 59.0 ft bgs

Myron L (not YSI)

Time	Time Step (min)	Water Level (ft brp)	Drawdown (ft)	Totalizer (gal)	Pumping Rate (gpm)	Temp (°C)	DO (mg/L)	Specific Cond. (µS/cm)	Cond. (mS/cm)	TDS (mg/L)	pH	ORP (mV)	Turbitity (NTU)	Total Vol. (gal)
15:30:15	0	20.70	0	146740.3	Pump on @ 7.9	gpm.	Very turbid/gray.							
15:35	5	24.00	3.30	146785.8	7.9	Turbid but improving.								
15:40	10	24.10	3.40	146825.2	7.9	15:43:38 ↑Q to 16.7gpm (PWL = 28.4 ftbrp).						15:45:45 to 20.4gpm (PWL = 30.1 ftbrp)	446	
15:50	20	35.40	14.70	146986.3	30.5	← max pump Q							250	246.0
16:00	30	35.65	14.95	147291.1	30.5				30.32				34.5	550.8
16:15	45	35.85	15.15	147748.5	30.5				30.70				11.2	1008.2
16:30	60	35.90	15.20	148207.2	30.6				31.00				7.11	
16:45	75	35.95	15.25	148666.0	30.6				31.26				4.95	
16:49:45	~80			148810.9	Pump off.									
					Total volume pumped today = 2070.6 gallons									

Stabilization Criteria:

3 to 5 minute recordings with 3 consecutive readings within:

pH: +/- 0.1 unit
Cond: +/- 3%
ORP: +/- 10 mV
Turb: +/- 10%
DO: +/- 10%
Desired Flow Rate: 100 to 500 mL/min

Form Created: 29-Sep-13

GEOSCIENCE
GEOSCIENCE Support Services, Inc.
P.O. Box 220, Claremont, CA 91711
Tel: (909) 451-6650 Fax: (909) 451-6638
www.gssiwater.com

CONFIDENTIAL
DRAFT
Subject to Revision

ISOLATED AQUIFER ZONE SAMPLING DATA SHEET

Day 2

Zone No. 4

Client: RBF/MPWSP - Exploratory Borehole Drilling

Borehole Name/Number: MDW-1

Sonic Casing Dia: 9 in Sonic Casing Depth: 44 ft bgs

Static WL: 20.65 ft brp

RP: 6.0 ft ags (top of 9" casing)

W.L.'s taken using an electronic W.L. indicator.

W.L.'s

Logged By: N. Reynolds (GSSI) & Cascade Drilling

Test Date: 5-10-14 / Sat

Screened Interval: 60-70 ft bgs

Reference Point Elevation: ft amsl

Pump Depth: 59.0 ft bgs

0.68 constant

Time	Time Step (min)	Water Level (ft brp)	Drawdown (ft)	Totalizer (gal)	Pumping Rate (gpm)	Temp (°C)	DO (mg/L)	Specific Cond. (µS/cm)	Cond. (µS/cm)	TDS (mg/L)	pH	ORP (mV)	Turbitity (NTU)
8:58:16	0	20.65	0	148810.9	Pump on @ ~15.5 gpm.			Water clear.					
09:03	5	26.80	6.15	-	15.5								
09:08	10	26.80	6.15	148951.8	15.2	slightly aerated							14.0
09:23	25	26.80	6.15	149179.2	15.2	aerated sample							6.50
09:38	40	26.80	6.15	149407.1	15.2	"	"						4.34
09:53	55	26.80	6.15	149634.5	15.2	"	"						2.96
10:08	70	26.90	6.25	149863.0	15.2	16.0	2.4	31624	26190	21515.2	7.25	80.2	1.88
10:23	85	26.90	6.25	150094.3	15.4	16.0	2.4	31699	26270	21562.8	7.33	20.9	1.39
10:38	100	26.95	6.30	150325.7	15.4	16.0	2.4	31805	26336	21624.0	7.33	0.6	1.30
10:53	115	26.95	6.30	150557.1	15.4	16.0	2.4	31858	26393	21658.0	7.33	-5.5	1.23
11:08	130	26.95	6.30	150788.7	15.4	16.0	2.4	31930	26462	21719.2	7.33	-9.1	1.50
11:23	145	27.00	6.35	151020.2	15.4	16.0	2.4	32007	26526	21766.8	7.33	-10.5	1.20
11:38	160	27.00	6.35	151251.7	15.4	16.0	2.4	32065	26591	21814.4	7.33	-10.8	0.92
11:48	170	27.00	6.35	151406.4	15.5	16.0	2.4	32107	26619	21841.6	7.32	-10.6	0.85
11:58	180	27.00	6.35	151560.7	15.4	16.0	2.5	32173	26662	21875.1	7.32	-10.1	0.83
12:05	187	Begin collecting WQ samples for lab analysis. Samples placed on ice.											
12:25	207	27.05	6.40	151982.8	15.6	16.0	2.6	32301	26769	21970.8	7.32	-8.9	0.89
12:32:54	215			152104.7	Pump off.								
					Total Volume pumped today = 3293.8 gallons								
13:53	295	20.90	0.25										

Flow thru cell = 1239.7 mL/min

Stabilization Criteria:

3 to 5 minute recordings with 3 consecutive readings within:

pH: +/- 0.1 unit
Cond: +/- 3%
ORP: +/- 10 mV
Turb: +/- 10%
DO: +/- 10%

Desired Flow Rate: 100 to 500 mL/min

Form Created: 29-Sep-13

ISOLATED AQUIFER ZONE CONSTRUCTION

Zone#1 As-built

Zone No. 1

113.5 to 118.5 ft bgs
(targetting the sand w/ gravel layer from 114.2 - 118.3 ftbgs)

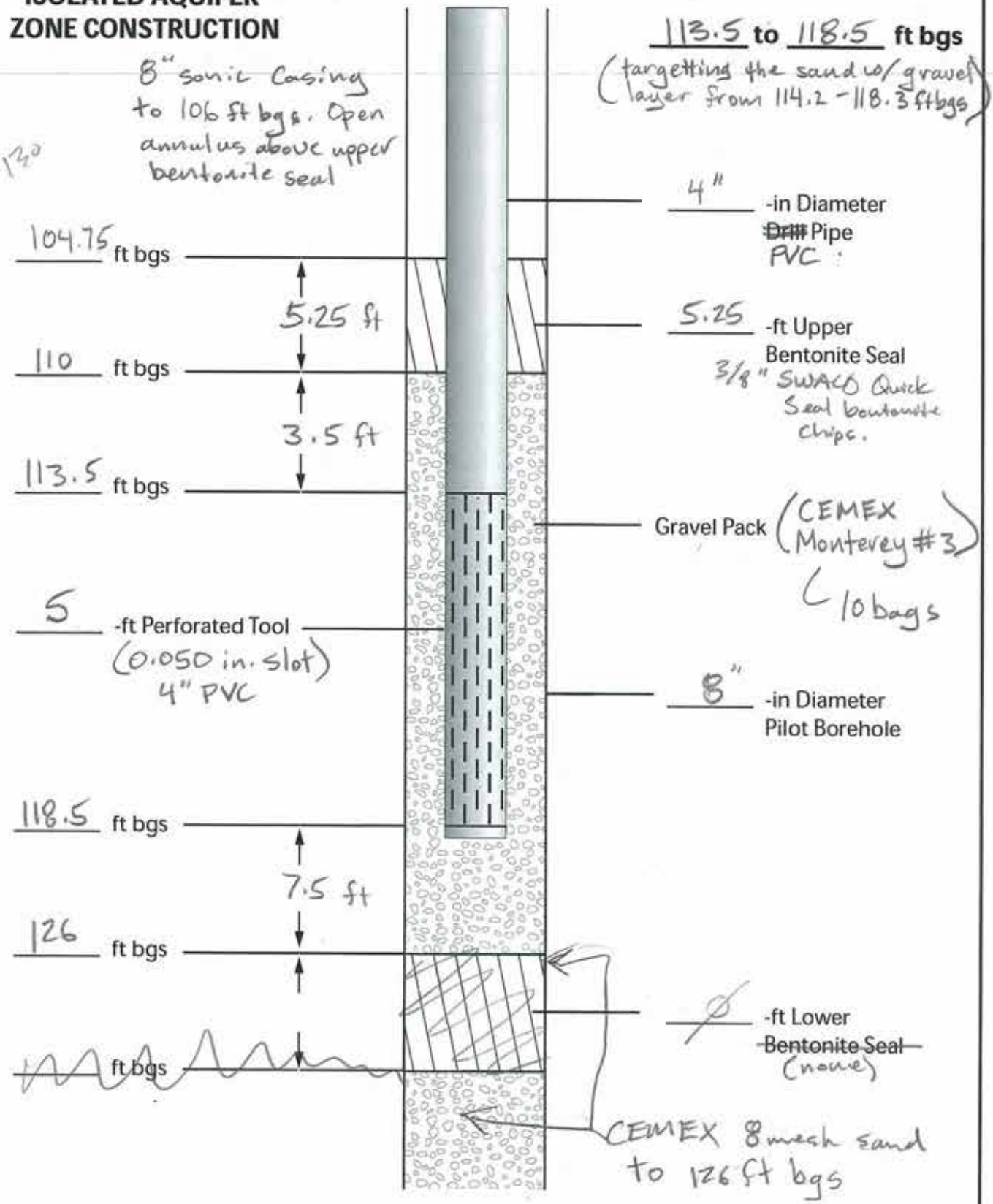

GEOSCIENCE GEOSCIENCE Support Services, Incorporated P.O. Box 220, Claremont, CA 91711 Tel: (909) 451-6650 Fax: (909) 451-6638 www.gsiwater.com	Client: RBF Consulting Inc. Well Name/Number: MPWSP Exploratory Borehole ML-1 Date: 10-5-13 / Sat

Zone #2 As Built

ISOLATED AQUIFER ZONE CONSTRUCTION

Zone No. 2

90 to 100 ft bgs

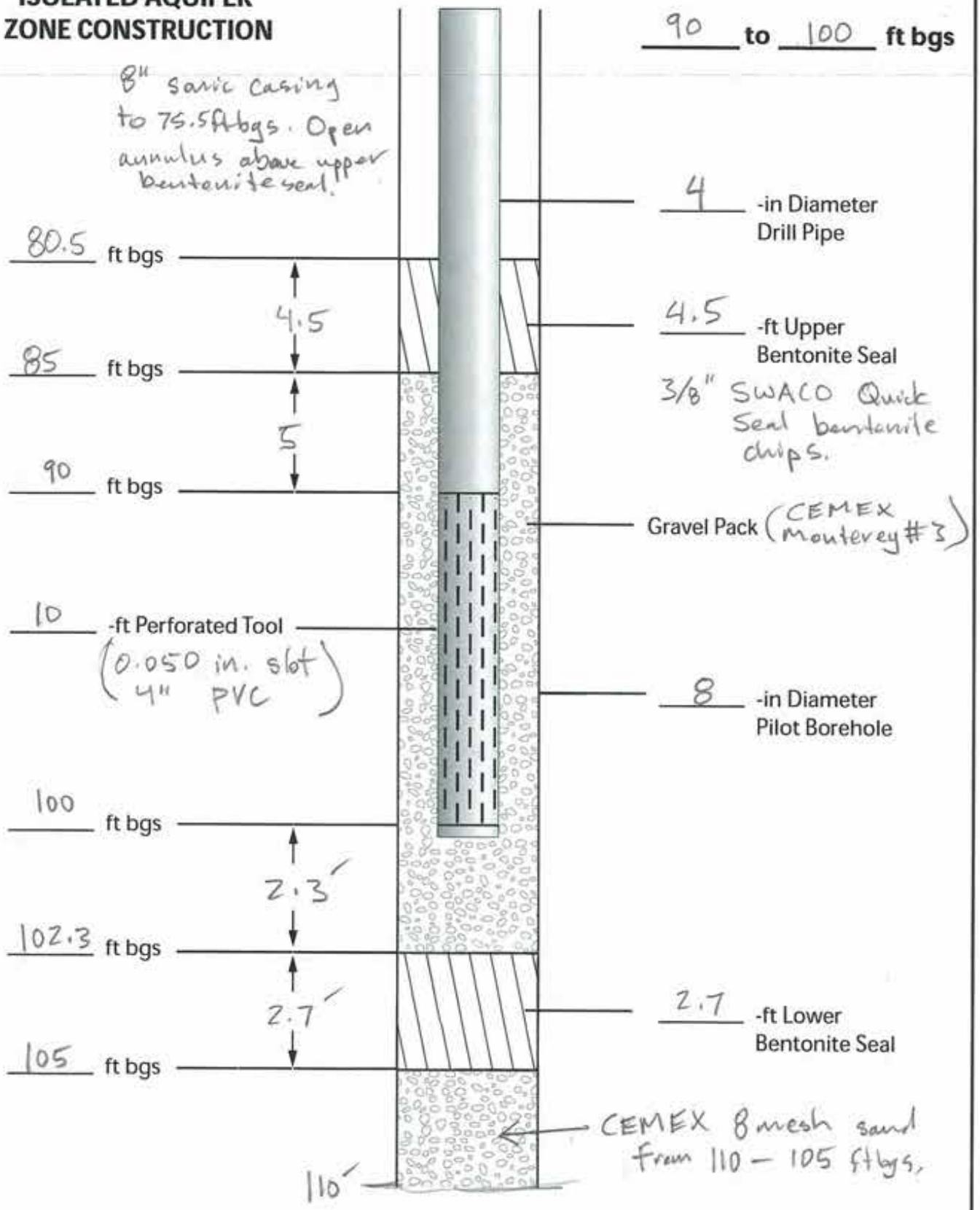

GEOSCIENCE GEOSCIENCE Support Services, Incorporated P.O. Box 220, Claremont, CA 91711 Tel: (909) 451-6650 Fax: (909) 451-6638 www.gsiwater.com	Client: RBF Consulting Inc. Well Name/Number: MPWSP Exploratory Borehole ML-1 Date: 10-7-13/Mon

Zone # 1 (113.5 - 118.5 ftbgs)

GEOSCIENCE

GEOSCIENCE Support Services, Inc.
P.O. Box 220, Claremont, CA 91711
Tel: (909) 451-6650 Fax: (909) 451-6638
www.gssiwater.com

CONFIDENTIAL
DRAFT
Subject to Revision

ISOLATED AQUIFER ZONE SAMPLING DATA SHEET

Zone No. 1

Client: RBF/MPWSP - Exploratory Borehole Drilling
Borehole Name/Number: ML-1
Sonic Casing Dia: 8 in Sonic Casing Depth: 106 ft bgs
Static WL: 9.6 ft brp
RP: 7.1 ft ags

Logged By: N. Reynolds (GSSI), Cascade Drilling
Test Date: 10-5-13 / Sat
Screened Interval: 113.5 - 118.5 ft bgs
Reference Point Elevation: _____ ft amsl
Pump Depth: 97 ft bgs

Time	Time Step (min)	Water Level (ft brp)	Drawdown (ft)	Totalizer (gal x 1)	Pumping Rate (gpm)	Temp (°C)	DO (mg/L)	Specific Cond. (µS/cm)	Cond. (µS/cm)	TDS (mg/L)	pH	ORP (mV)	Turbitity (NTU)
10:10	0	9.6	0	7597.6	0	start pumping @ 8gpm. turbid but not sandy							
10:15	5	58.6	49.0	7685.4	17	Turb improving							
10:20	10	59.0	49.4	7769.5	16.8	↑ Q							
10:22	12					↓ Q slightly due to drawdown close to pump							
10:25	15			7920.1		Turbidity improving							
10:31	21					↓ Q. sucking air. Turb ok. No aeration							
10:32	22	103.0	93.4	8101.2	22								
10:38	26	102.1	92.5		20	↓ Q again. Turb ok							
10:50	40					↓ Q. sucking air. Lower pump 2 ft to 99 ftbgs							
11:12	63	sounder issues?				obstruction getting W.L. @ 97.9 ftbgs							
11:15	65			8978.5		Turn pump off							
11:20:40				8978.5		Pump on							
11:23	73	25.5	15.9		10.3	adjust sounder							
11:26	76				15.3	↑ Q to 15.3 gpm							
11:27	77				17.8	↑ Q to 17.8 gpm							
11:35	85	68.7	59.1			W.L. beginning to stabilize.							12.7
12:38	18			9210.0	~~0~~	Pump off. Cascade stop to install smaller pump.							
13:09		11.25	1.65		~~0~~	SWL after pulling pump.							

Stabilization Criteria:

3 to 5 minute recordings with 3 consecutive readings within:

pH: +/- 0.1 unit
Cond: +/- 3%
ORP: +/- 10 mV
Turb: +/- 10%
DO: +/- 10%
Desired Flow Rate: 100 to 500 mL/min

See page 2 →

Form Created: 29-Sep-13

Zone #1 (113.5 - 118.5 ftbgs)

GEOSCIENCE

GEOSCIENCE Support Services, Inc.
P.O. Box 220, Claremont, CA 91711
Tel: (909) 451-6650 Fax: (909) 451-6638
www.gssiwater.com

CONFIDENTIAL
DRAFT
Subject to Revision

YSI Pro series

ISOLATED AQUIFER ZONE SAMPLING DATA SHEET

Zone No. 1 (113.5 - 118.5 ftbgs)

Client: RBF/MPWSP - Exploratory Borehole Drilling
Borehole Name/Number: ML-1
Sonic Casing Dia: 8 in Sonic Casing Depth: 106 ft bgs
Static WL: 11.7 ft brp ← 2nd static
RP: 7.1 ftags
New static

Logged By: N. Reynolds (GSSI); Cascade Drilling
Test Date: 10-5-13 / Sat
Screened Interval: 113.5 - 118.5 ft bgs
Reference Point Elevation: _____ ft amsl
Pump Depth: 105 ft bgs ← 2nd Pump (Gallon)

Time	Time Step (min)	Water Level (ft brp)	Drawdown (ft)	Totalizer (gal x 1)	Pumping Rate (gpm)	Temp (°C)	DO (mg/L)	Specific Cond. (µS/cm)	Cond. (µS/cm)	TDS (mg/L)	pH	ORP (mV)	Turbitity (NTU)	Salinity (ppt)
14:00:50	0	11.7	0	9215.5			Pump on.							
14:01							↓Q							
14:04	3	34.5	22.8		12.7								70.0	
14:07	6				11.7		↑Q							
14:15	14	36.6	24.9		13.8									
14:23	22	38.7	27.0	9500.0	~14	17.0	—	35842	30358	23302.5	6.83	—	5.75	
14:31	30	39.3	27.6	9611.8	14.0	16.9	—	35793	30280	23270.0	6.87	—	3.26	22.63
14:40	39	40.15	28.45	9737.4	14.0	17.0	—	35729	30299	23231.0	6.87	—	2.80	22.60
14:50	49	40.05	28.35	9876.5	13.9	16.9	—	35758	30195	23231.5	6.88	—	1.74	22.60
15:00	59	40.33	28.63	10,015.8	13.9	16.9	—	35696	30156	23198.5	6.89	—	1.26	22.55
15:10	69	40.7	29.0	10,155.5	14.0	17.0	—	35615	30180	23140.0	6.89	—	1.14	22.51
15:20	79	40.84	29.14	10,294.2	13.9	17.0	—	35557	30114	23107.5	6.91	—	1.06	22.47
15:30	89	41.0	29.3	10,433.4	13.9	17.0	—	35497	30048	23075.0	6.91	—	1.16	22.41
15:40	99	41.2	29.5	10,572.5	13.9	17.0	—	35429	30002	23029.5	6.91	—	1.04	22.38
15:50	109	41.65	29.95	10,711.4	13.9	16.9	—	35362	29915	22984.0	6.91	—	1.21	22.33
16:00	119	41.6	29.9	10,850.3	13.9	17.0	—	35300	29875	22964.5	6.91	—	0.88	22.30
16:10	129	41.75	30.05	10,989.2	13.9	17.0	—	35270	29827	22919.0	6.91	—	0.75	22.26
16:27	146	41.95	30.25	11,225.1	13.9	16.9	—	35169	29716	22847.5	6.92	—	0.70	22.21
16:45	Water samples collected for laboratory analysis. Placed on ice.													
17:47	226	42.62	30.92	12,356.2	14.1	16.7	—	34707	29195	22561.5	6.91	—	0.42	21.87

Stabilization Criteria: 17:54:43 12,462.0 Turn pump off. 4864.4 gallons pumped total.

3 to 5 minute recordings with 3 consecutive readings within:

pH: +/- 0.1 unit
Cond: +/- 3%
ORP: +/- 10 mV
Turb: +/- 10%
DO: +/- 10%
Desired Flow Rate: 100 to 300 mL/min

Form Created: 29-Sep-13

GEOSCIENCE

GEOSCIENCE Support Services, Inc.
P.O. Box 220, Claremont, CA 91711
Tel: (909) 451-6650 Fax: (909) 451-6638
www.gssiwater.com

CONFIDENTIAL
DRAFT
Subject to Revision

ISOLATED AQUIFER ZONE SAMPLING DATA SHEET

Zone No. 2 (90-100 ft bgs)

Client: RBF/MPWSP - Exploratory Borehole Drilling
Borehole Name/Number: ML-1
Sonic Casing Dia: 8 in Sonic Casing Depth: 75.5 ft bgs
Static WL: 9.50 ft brp
RP: 7.1 ft agl

Logged By: N. Reynolds (GSSI) & Cascade Drilling
Test Date: 10-7-13 / Mon
Screened Interval: 90-100 ft bgs
Reference Point Elevation: _____ ft amsl
Pump Depth: 80 ft bgs ← smaller pump

Time	Time Step (min)	Water Level (ft brp)	Drawdown (ft)	Totalizer (gal x1)	Pumping Rate (gpm)	Temp (°C)	DO (mg/L)	Specific Cond. (µS/cm)	Cond. (µS/cm)	TDS (mg/L)	pH	ORP (mV)	Turbitity (NTU)	Sal ppt
14:09:43	0	9.50	0	12,460.0	∅			pump on. Turbid, but not sandy. 15.8 gpm						
14:13	3	~63	53.5		15.8		↓Q	W.L. dropping quickly						
14:15	5	61.5	52.0		11.0									
14:17	7						↑Q	14118	↑Q to 14.8 gpm					
14:27	17						↓Q	W.L. approaching pump	13 gpm					
14:55	45							sucking air. W.L @ pump. ↓Q. Sulfur smell to water.				10.9 gpm		
15:26	136	77.8	70.7	13,409.3	11.1	17.0	—	628	532	409.50	7.21	—	12.5	0.31
		Water is very		aerated/milky. Sulfer smell.										
15:41	151	78.9	69.4	13,573.3	10.9	17.0	—	630	534	409.50	7.22	—	10.0	
15:50	160	79.3	69.8	13,671.3	10.9	16.9		643	544	416.00	7.23		9.79	0.31
16:08	178	79.9	70.4	13,867.3	10.9	16.9		646	546	422.50	7.23		8.11	0.32
16:20	190	80.3	70.8	13,997.7	10.9	16.9		645	545	422.50	7.23		9.20	0.32
16:33	203	74.4	64.9	14,127.7	9.9	17.0		644	545	422.50	7.23		5.53	0.32
16:56	226	74.4	64.9	14,352.6	9.8	16.9		646	545	422.50	7.23		5.29	0.32
17:11	241	74.65	65.15	14,499.1	9.8	16.8		646	545	422.50	7.23		5.73	0.32
17.23	↓Q slightly													
17:40	270	64.15	54.65	14,755.0	7.9	16.8		645	545	422.50	7.23		1.82	0.32
18:04	294	64.00	54.50	14,946.8	8.0	16.8		645	544	422.50	7.24		2.06	0.32
18:20	310	64.20	54.70	15,074.5	8.0	16.8		647	545	422.50	7.24		2.52	0.32
19:01	351	64.8	55.30	15,410.1	8.2	16.9		646	546	422.50	7.24		4.48	0.32

19:11 Pump off. 15,551.0

18:25 Take WQ samples for lab analysis

Stabilization Criteria:
3 to 5 minute recordings with 3 consecutive readings within:
pH: +/- 0.1 unit
Cond: +/- 3%
ORP: +/- 10 mV
Turb: +/- 10%
DO: +/- 10%
Desired Flow Rate: 100 to 500 mL/min

Form Created: 29-Sep-13

Zone #1 As Built

ISOLATED AQUIFER ZONE CONSTRUCTION

Zone No. 1

167 to 177 ft bgs

8" Sonic casing to 155 ftbgs. Open annulus above upper bentonite seal.

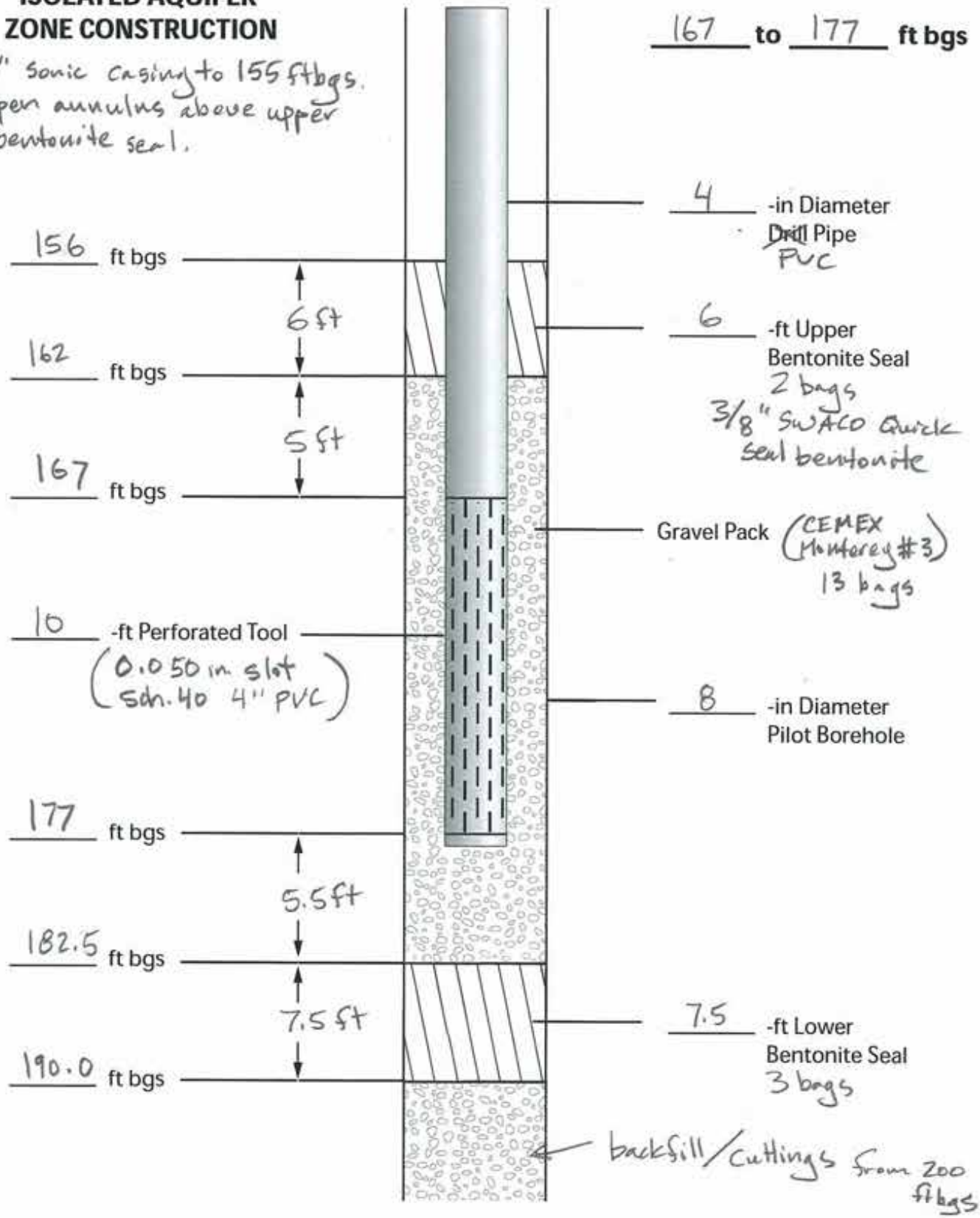

GEOSCIENCE GEOSCIENCE Support Services, Incorporated P.O. Box 220, Claremont, CA 91711 Tel: (909) 451-6650 Fax: (909) 451-6638 www.gsiwater.com	Client: RBF Consulting Inc. Well Name/Number: MPWSP ML-2 (Del Mar Fishevics) Date: 12-16-13/ Mon

Zone#2 As-Built

ISOLATED AQUIFER ZONE CONSTRUCTION

Zone No. 2

90 **to** 100 **ft bgs**

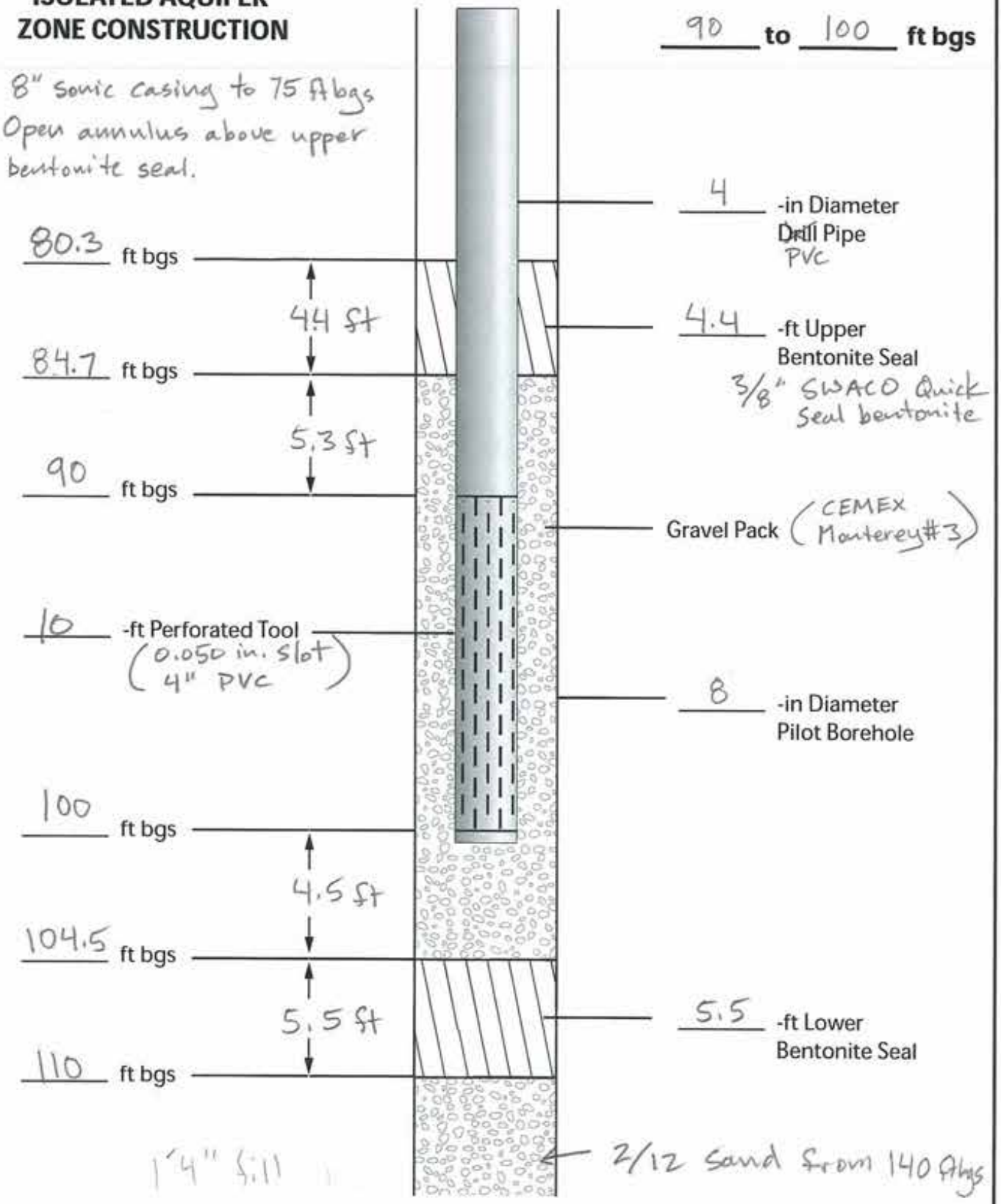

GEOSCIENCE GEOSCIENCE Support Services, Incorporated P.O. Box 220, Claremont, CA 91711 Tel: (909) 451-6650 Fax: (909) 451-6638 www.gsiwater.com	Client: RBF Consulting Inc. Well Name/Number: MPWSP ML-2 (Del Mar Fisheries) Date: 12-18-13 / Wed

GEOSCIENCE

GEOSCIENCE Support Services, Inc.
P.O. Box 220, Claremont, CA 91711
Tel: (909) 451-6650 Fax: (909) 451-6638
www.gssiwater.com

CONFIDENTIAL DRAFT
Subject to Revision

ISOLATED AQUIFER ZONE SAMPLING DATA SHEET

Zone No. 1 WCL.

Client: RBF/MPWSP - Exploratory Borehole Drilling
Borehole Name/Number: ML-2 (Del Mar Fisheries)
Sonic Casing Dia: 8 in Sonic Casing Depth: 155 ft bgs
Static WL: 6.12 ft brp 2nd Static = 9.80 ft brp
RP: 6.0 ft ags (TOC)

Logged By: N. Reynolds (GSSI) & Cascade
Test Date: 12-17-13 Tue
Screened Interval: 167 - 177 ft bgs
Reference Point Elevation: _____ ft amsl
Pump Depth: 165 ft bgs

0.68 constant

Time	Time Step (min)	Water Level (ft brp) (9.8 ft)	Drawdown (ft)	Totalizer (gal)	Pumping Rate (gpm)	Temp (°C)	DO (mg/L)	Specific Cond. (µS/cm)	Cond. (µS/cm)	TDS (mg/L)	pH	ORP (mV)	Turbitity (NTU)
10:10:23	0	6.12	0	51134.6	Pump	on to test polarity & DO determination.							
10:13	3	90.0	84.0		21.8								
10:17	7	138.0	132.0	Rolled back	~22	↓Q to 13 gpm							
10:23	13	123.5	117.5		14.3								
10:33	23			51489.0	Pump	off. Switch to smaller pump. 354.4 gallons pumped.							
13:08:10	0	9.80	new static	51461.9	Pump	on @ 14.8 gpm							
13:11	3	59.3	49.5		14.8	some aeration to water.							
13:17	9	88.0	78.2		14.8								
13:20	12	91.2	81.4	51619.1	~14.8	17.8	0.2	34190	29464	23249.2	6.93	-28.3	12.4
13:24	Pump off to fix hose leak.			51666.5	~14.8								
13:32	Pump on. Adjust Q.			~13.3 gpm.									
13:38	6	94.8	85.0		15.6	↑Q to 17.1 gpm			13:43	↑Q to	18.1 gpm		
13:50	18	130.4	120.6	51982.6	17.8	17.6	1.2	34195	29420	23276.4	6.98	-76.7	21.2
14:00	28	133.3	123.5	52160.4	17.8	17.6	0.4	34484	29612	23453.2	6.92	-94.9	9.79
14:10	38	134.0	124.2	52337.8	17.7	17.6	0.2	34566	29656	23500.8	6.91	-99.0	8.12
14:20	48	134.6	124.8	52515.0	17.7	17.5	0.1	34591	29665	23521.2	6.91	-100.3	5.80
14:30	58	135.0	125.2	52692.1	17.7	17.5	0.1	34614	29682	23534.8	6.90	-100.5	5.80
14:40	68	135.4	125.6	52869.3	17.7	17.5	0.0	34638	29662	23562.0	6.89	-100.6	3.46
14:50	78	135.5	125.7	53046.2	17.7	17.4	0.0	34651	29655	23562.0	6.87	-100.7	2.81
15:00	88	135.7	125.9	53223.1	17.7	17.4	0.0	34672	29638	23575.6	6.87	-100.1	2.44

Stabilization Criteria:

3 to 5 minute recordings with 3 consecutive readings within:

pH: +/- 0.1 unit
Cond: +/- 3%
ORP: +/- 10 mV
Turb: +/- 10%
DO: +/- 10%
Desired Flow Rate: 100 to 500 mL/min

Flow thru cell = 1081.5 mL/min

Form Created: 29-Sep-13

GEOSCIENCE

GEOSCIENCE Support Services, Inc.
P.O. Box 220, Claremont, CA 91711
Tel: (909) 451-6650 Fax: (909) 451-6638
www.gssiwater.com

CONFIDENTIAL
DRAFT
Subject to Revision

ISOLATED AQUIFER ZONE SAMPLING DATA SHEET

Zone No. 1

Client: RBF/MPWSP - Exploratory Borehole Drilling

Borehole Name/Number: ML-2

Sonic Casing Dia: 8 in Sonic Casing Depth: 155 ft bgs

Static WL: 9.80 ft brp

RP: 6.0 ft ags

Logged By: N. Reynolds (GSSI) & Cascade W.L.

Test Date: 12-17-13 / Tue

Screened Interval: 167 - 177 ft bgs

Reference Point Elevation: _____ ft amsl

Pump Depth: 165 ft bgs

0.68 Constant

Time	Time Step (min)	Water Level (ft brp) (9.85ft)	Drawdown (ft)	Totalizer (gal) (53223.1)	Pumping Rate (gpm)	Temp (°C)	DO (mg/L)	Specific Cond. (µS/cm)	Cond. (µS/cm)	TDS (mg/L)	pH	ORP (mV)	Turbitity (NTU)
15:10	98	problem w/ sounder	"	53400.1	17.7	17.4	0.0	34688	29647	23589.2	6.86	-99.8	1.33
15:20	108	"	"	53577.1	17.7	17.4	0.0	34697	29650	23589.2	6.86	-99.8	3.50
15:30	118	136.7	126.9	53753.9	17.7	17.4	0.0	34716	29649	23602.8	6.86	-99.5	2.75
15:40	128	136.8	127.0	53930.8	17.7	17.4	0.0	34710	29643	23602.8	6.86	-98.9	1.94
15:50	138	136.9	127.1	54107.7	17.7	17.4	0.0	34717	29650	23609.6	6.86	-99.5	2.03
16:00	148	137.0	127.2	54284.5	17.7	17.4	0.0	34716	29646	23602.8	6.86	-99.2	1.70
16:10	158	137.2	127.4	54461.2	17.7	17.3	0.0	34729	29654	23616.4	6.86	-99.5	2.36
16:20	168	137.25	127.45	54638.1	17.7	17.4	0.0	34728	29657	23616.4	6.86	-99.2	2.78
16:30	178	137.24	127.44	54814.8	17.7	17.3	0.0	34734	29656	23616.4	6.86	-99.8	1.72
16:40	188	137.45	127.65	54991.6	17.7	17.3	0.0	34730	29650	23616.4	6.86	-99.2	1.68
16:45	193	Collect WQ samples for lab analysis. Samples placed on ice.											
17:15	223	138.5	128.7	55615.9	17.8	17.3	0.0	34760	29660	23636.8	6.86	-95.7	3.40
17:26	234			55818.4	Pump off.								
							Total volume pumped = 4683.8 gallons.						

Stabilization Criteria:

3 to 5 minute recordings with 3 consecutive readings within:

pH: +/- 0.1 unit
Cond: +/- 3%
ORP: +/- 10 mV
Turb: +/- 10%
DO: +/- 10%
Desired Flow Rate: 100 to 500 mL/min

Form Created: 29-Sep-13

GEOSCIENCE

GEOSCIENCE Support Services, Inc.
P.O. Box 220, Claremont, CA 91711
Tel: (909) 451-6650 Fax: (909) 451-6638
www.gssiwater.com

CONFIDENTIAL
DRAFT
Subject to Revision

ISOLATED AQUIFER ZONE SAMPLING DATA SHEET

Zone No. 2

Client: RBF/MPWSP - Exploratory Borehole Drilling
Borehole Name/Number: MPWSP ML-2 (DelMar Fisheries)
Sonic Casing Dia: 8 in Sonic Casing Depth: 75 ft bgs
Static WL: 9.6 ft brp (3.6 ft bgs)
RP: 6.0 ags (top of 8" casing)

Logged By: N. Reynolds (GSSI) & Cascade
Test Date: 12-18-13 / Wed
Screened Interval: 90 - 100 ft bgs
Reference Point Elevation: _____ ft amsl
Pump Depth: 80 ft bgs (intake)

Time	Time Step (min)	Water Level (ft brp)	Drawdown (ft)	Totalizer (gal)	Pumping Rate (gpm)	Temp (°C)	DO (mg/L)	Specific Cond. (µS/cm)	Cond. (µS/cm)	TDS (mg/L)	pH	ORP (mV)	Turbitity (NTU)
15:45:19	0	9.6	0	55818.2	~28.2	Pump on.							
15:47	2	35.0	25.4		~28.2								
15:50	5	35.9	26.3	55964.6	~28.2								471
16:00	15	36.1	26.5	56246.2	28.2								25.2
16:10	25	36.2	26.6	56527.8	28.2								12.5
16:23	38	36.3	26.7	56893.9	28.2								5.12
16:25 & 16:26		↑ Q				Max possible rate w/ pump							
16:27	42	47.0	37.4		42.4	↑ Q	to ~48 gpm	50.6 ft brp w.l.			16:31 ↑ Q		
16:32	47	55.3	45.7	57258.7	50.4								
16:35	50	55.7	46.1	57408.1	49.8								81.5
16:40	55	56.6	47.0	57656.5	49.7								27.6
16:45	60	57.1	47.5	57904.4	49.6								20.7
16:50	65	57.6	48.0	58151.9	49.5								16.6
16:52	67			58242.0	Pump off.	Volume pumped = 2,423.8 gallons							

Stabilization Criteria:

3 to 5 minute recordings with 3 consecutive readings within:

pH: +/- 0.1 unit
Cond: +/- 3%
ORP: +/- 10 mV
Turb: +/- 10%
DO: +/- 10%
Desired Flow Rate: 100 to 500 mL/min

Form Created: 29-Sep-13

GEOSCIENCE
GEOSCIENCE Support Services, Inc.
P.O. Box 220, Claremont, CA 91711
Tel: (909) 451-6650 Fax: (909) 451-6638
www.gssiwater.com

CONFIDENTIAL
DRAFT
Subject to Revision

ISOLATED AQUIFER ZONE SAMPLING DATA SHEET

Zone No. 2 W.L.'s

Client: RBF/MPWSP - Exploratory Borehole Drilling
Borehole Name/Number: ML-2 (Del Mar Fisheries)
Sonic Casing Dia: 8 in Sonic Casing Depth: 75 ft bgs
Static WL: 7.6 ft brp (1.6 ft bgs)
RP: 6.0' ags (top of 8" casing)

Logged By: N. Reynolds (GSSI) & Cascade
Test Date: 12-19-13 / Thu
Screened Interval: 90 - 100 ft bgs
Reference Point Elevation: _____ ft amsl
Pump Depth: 80 ft bgs

high tide = 10:35 5.12'

0.68 constant

Time	Time Step (min)	Water Level (ft brp)	Drawdown (ft)	Totalizer (gal)	Pumping Rate (gpm)	Temp (°C)	DO (mg/L)	Specific Cond. (µS/cm)	Cond. (µS/cm)	TDS (mg/L)	pH	ORP (mV)	Turbitity (NTU)
8:22:10	0	7.6	0	58241.0	Pump on 19.6 gpm			08:24 ↑ Q to 25.1 gpm					
8:26	4	27.7	20.1	58324.8	25.1	Water slightly aerated.							22.6
8:30	8	28.5	20.9	58426.0	25.3								5.03
9:15	53	29.5	21.9	59565.0	25.3	16.3	0.1	10573	8813	7208.0	6.68	73.3	1.95
9:25	63	29.62	22.02	59819.5	25.5	16.3	0.0	10705	8946	7289.6	6.68	63.5	1.43
9:35	73	29.57	21.97	60074.1	25.5	16.4	0.0	10834	9049	7364.4	6.67	55.4	1.35
9:45	83	29.54	21.94	60328.4	25.4	16.4	0.0	10937	9145	7439.2	6.67	49.9	1.22
9:55	93	29.53	21.93	60582.4	25.4	16.4	0.0	11079	9253	7534.4	6.67	44.6	1.03
10:05	103	29.62	22.02	60836.4	25.4	16.4	0.0	11151	9335	7582.0	6.67	40.7	0.77
10:15	113	29.60	22.00	61090.5	25.4	16.4	0.0	11240	9414	7643.2	6.67	37.4	0.63
10:25	123	29.62	22.02	61344.9	25.4	16.4	0.0	11317	9480	7711.2	6.67	34.7	0.52
10:35	133	29.64	22.04	61599.0	25.4	16.4	0.0	11413	9549	7772.4	6.67	32.3	0.50
10:45	143	29.72	22.12	61853.1	25.4	16.4	0.0	11508	9635	7826.8	6.67	30.1	0.72
10:45	Begin	collecting WQ samples for laboratory analysis. Samples placed on ice.											
11:01	159												0.51
11:22	180	29.97	22.37	62802.6	25.7	16.5	0.0	11825	9896	8037.6	6.68	22.1	0.58
11:30:28	188			63017.3	25.4	Pump off.		Total Volume pumped = 4776.3 gallons					
12:25	243	8.00	0.40	-	0								

Rising tide

Stabilization Criteria:

3 to 5 minute recordings with 3 consecutive readings within:

pH: +/- 0.1 unit
Cond: +/- 3%
ORP: +/- 10 mV
Turb: +/- 10%
DO: +/- 10%
Desired Flow Rate: 100 to 500 mL/min

Flow thru cell = 1148.5 mL/min

Form Created: 29-Sep-13

Zone #1 - As Built

ISOLATED AQUIFER ZONE CONSTRUCTION

Zone No. 1

180 to 190 ft bgs

8" sonic casing to 164 ft bgs
Open annulus above upper bentonite seal.

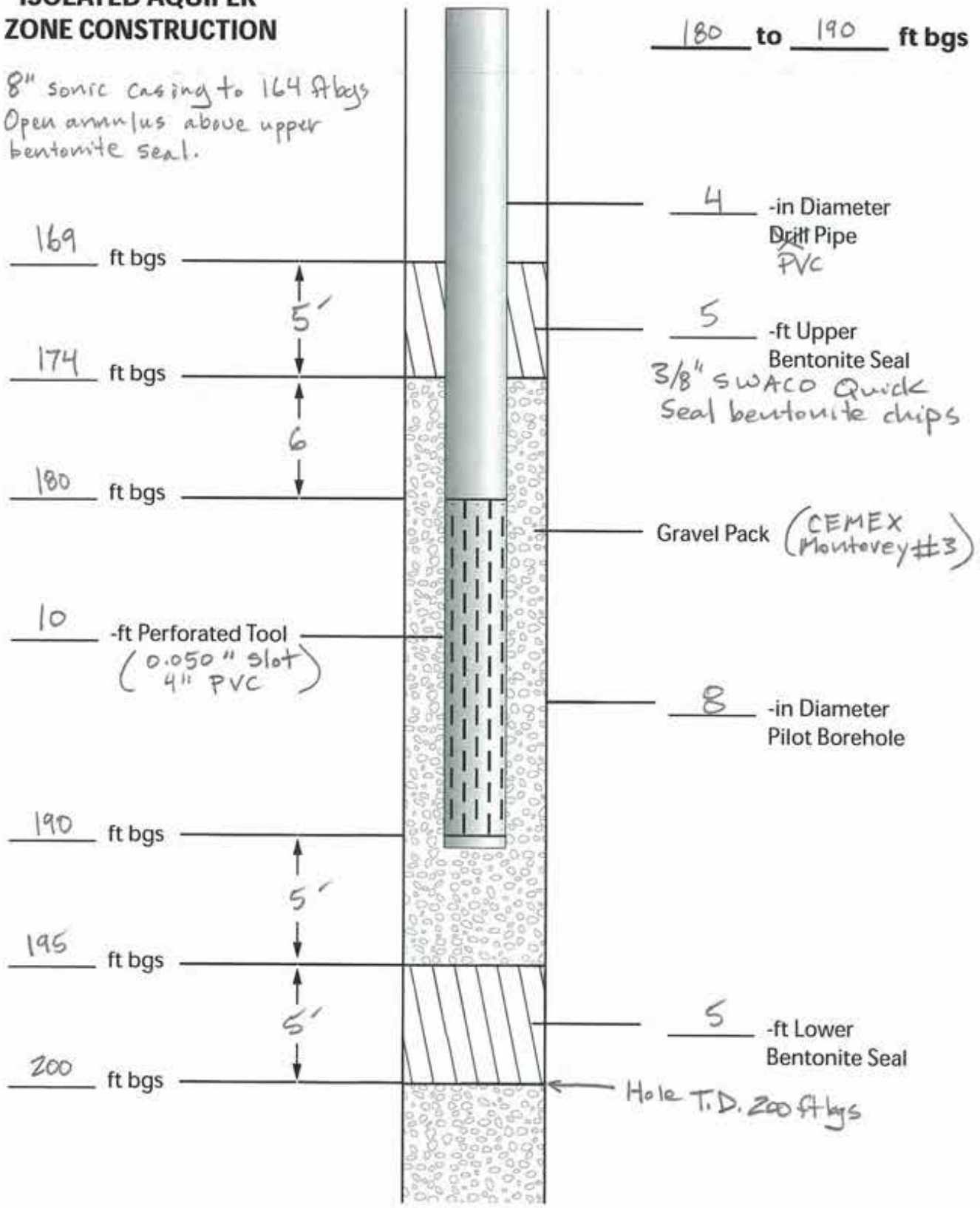

GEOSCIENCE	
GEOSCIENCE Support Services, Incorporated P.O. Box 220, Claremont, CA 91711 Tel: (909) 451-6650 Fax: (909) 451-6638 www.geoswater.com	Client: RBF Consulting Inc. Well Name/Number: MPWSP Exploratory Borehole ML-3 Date: 1-10-14 / Fri

Zone #2 - As Built

ISOLATED AQUIFER ZONE CONSTRUCTION

Zone No. 2

103 **to** 113 **ft bgs**

8" sonic casing to 82 ftbgs
Open annulus above upper bentonite seal.

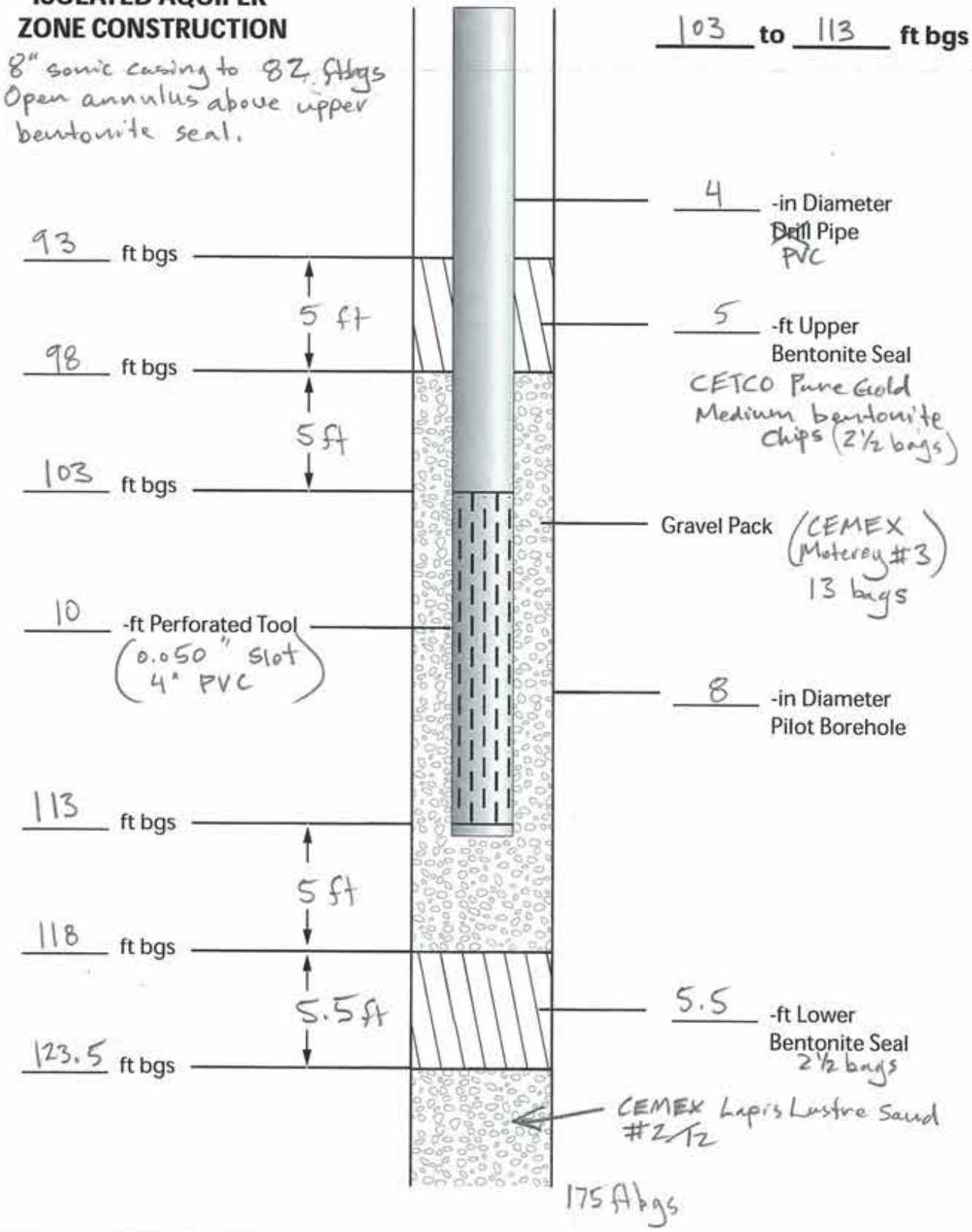

GEOSCIENCE GEOSCIENCE Support Services, Incorporated P.O. Box 220, Claremont, CA 91711 Tel: (909) 451-6650 Fax: (909) 451-6638 www.geoswater.com	Client: RBF Consulting Inc. Well Name/Number: MPWSP Exploratory Borehole ML-3 Date: 1-12-14/Sun

GEOSCIENCE

GEOSCIENCE Support Services, Inc.
P.O. Box 220, Claremont, CA 91711
Tel: (909) 451-6650 Fax: (909) 451-6638
www.gssiwater.com

CONFIDENTIAL
DRAFT
Subject to Revision

ISOLATED AQUIFER ZONE SAMPLING DATA SHEET

Zone No. 1

Client: RBF/MPWSP - Exploratory Borehole Drilling
Borehole Name/Number: ML-3 (Hwy 1 South)
Sonic Casing Dia: 8 in Sonic Casing Depth: 164 ft bgs
Static WL: 14.0 ft brp (8 ft bgs)
RP: 6.0 ft ags (top of 8" casing)

Logged By: N. Reynolds (GSSI) & Cascade Drilling
Test Date: 1-10-14 / Fri.
Screened Interval: 180-190 ft bgs
Reference Point Elevation: _____ ft amsl
Pump Depth: 164.0 ft bgs

0.68 constant

Time	Time Step (min)	Water Level (ft brp)	Drawdown (ft)	Totalizer (gal)	Pumping Rate (gpm)	Temp (°C)	DO (mg/L)	Specific Cond. (µS/cm)	Cond. (µS/cm)	TDS (mg/L)	pH	ORP (mV)	Turbitity (NTU)
14:41:21	0	14.0	0	63016.9	Pump on @ 2.5 gpm								
14:44	Stop pumping. PWL reaches pump.												
14:54:58	0 Resume pumping			63057.9	@ ~2 gpm								
14:58	Stop pumping. PWL reaches pump.				Recovery is slow. Crew pull pump and swab screen.								
16:56		58.7		63057.9	Recovering. Reinstall pump to 184 ft bgs.								
16:57	Pump on @ ~ 3.5 gpm. Turbid.												
17:00		138.0		8.9 gpm									
17:03	Stop pumping.			63113.5	PWL draws down to pump @ 2.5 gpm.								

Stabilization Criteria:

3 to 5 minute recordings with 3 consecutive readings within:

pH: +/- 0.1 unit
Cond: +/- 3%
ORP: +/- 10 mV
Turb: +/- 10%
DO: +/- 10%
Desired Flow Rate: 100 to 500 mL/min

5/(33.84/60)

Form Created: 29-Sep-13

365 gallons = 3 well Vol.

Sheet 3 of 4

GEOSCIENCE

GEOSCIENCE Support Services, Inc.
P.O. Box 220, Claremont, CA 91711
Tel: (909) 451-6650 Fax: (909) 451-6638
www.gssiwater.com

CONFIDENTIAL
DRAFT
Subject to Revision

ISOLATED AQUIFER ZONE SAMPLING DATA SHEET

Zone No. 1

Client: RBF/MPWSP - Exploratory Borehole Drilling
Borehole Name/Number: ML-3 (Hwy 1 South)
Sonic Casing Dia: 8 in Sonic Casing Depth: 164 ft bgs
Static WL: 18.57 ft brp (12.57 ft bgs)
RP: 6.0 ft ags (top of 8" casing)

Logged By: N. Reynolds (GSSI) & Cascade Drilling (W.L.'s)
Test Date: 1-11-14 / Sat
Screened Interval: 180-190 ft bgs
Reference Point Elevation: _____ ft amsl
Pump Depth: 184 & 174 ft bgs

Time	Time Step (min)	Water Level (ft brp)	Drawdown (ft)	Totalizer (gal)	Pumping Rate (gpm)	Temp (°C)	DO (mg/L)	Specific Cond. (µS/cm)	Cond. (µS/cm)	TDS (mg/L)	pH	ORP (mV)	Turbitity (NTU)
8:21:05	0	18.57	-	63083.3	Pump on @ ~3.8 gpm. Turbid.								
8:26	5	66.0	47.43										
8:31	10	99.0	80.43		3.2								
8:36	15	126.8	108.23		3.2				decreasing				
8:40	19	139.5	120.93	63147.3	silty. Aerated.								
8:45	24	175.0	156.43			19.8	0.6	7744	6955	5222.4	7.43	-332.1	turbid
~8:46	25	Pump off.		63166.5	W.L. approaching pump intake.								
8:54:30	33	139.9	121.33	Recovering	W.L. (slowly recovering)								
10:54	153	65.7	47.13	Recovering	W.L. after swabbing. Raise/install pump to 174 ft bgs (intake)								
12:20:20	0	41.2	22.63	63166.5	Pump on. 8.2 gpm.			12:21↓Q to 4.5 gpm	12:24↓Q to 2.8 gpm				Turbid.
12:24	4	95.6	77.03		4.5								
12:30	10	sounder	stuck	63204.6	~2.8								
12:36	16			63215.0	Stop Pumping. PWL @ pump.								
12:37:30		Resume	pumping.										
12:39	19	139.7	121.13										
12:41	21	154.0	135.43	63222.2	2.2	19.7	5.4	9665	8678	6534	7.31	-97.9	turbid
12:45	25	169.0	150.43	63231.4	2.3	20.0	5.2	8976	8102	6038	7.31	-100.2	" "
12:46	26	Stop Pumping. PWL @ pump.											
13:04:15	44	Resume	pumping. ~2.0 gpm										
13:06	46			63233.0	2.0								

Total gallons: 64.9

Stabilization Criteria:

3 to 5 minute recordings with 3 consecutive readings within:

pH: +/- 0.1 unit
Cond: +/- 3%
ORP: +/- 10 mV
Turb: +/- 10%
DO: +/- 10%
Desired Flow Rate: 100 to 500 mL/min

15:47:54
11:12:54

Form Created: 29-Sep-13

GEOSCIENCE
GEOSCIENCE Support Services, Inc.
P.O. Box 220, Claremont, CA 91711
Tel: (909) 451-6650 Fax: (909) 451-6638
www.gssiwater.com

CONFIDENTIAL
DRAFT
Subject to Revision

ISOLATED AQUIFER ZONE SAMPLING DATA SHEET

Zone No. 1

Client: RBF/MPWSP - Exploratory Borehole Drilling
Borehole Name/Number: ML-3 (Hwy 1 South)
Sonic Casing Dia: 8 in Sonic Casing Depth: 164 ft bgs
Static WL: 18.57 ft brp
RP: 6.0 ftags

Logged By: N. Reynolds (GSSI) & Cascade Drilling
Test Date: 1-11-14/Sat
Screened Interval: 180-190 ft bgs
Reference Point Elevation: _____ ft amsl
Pump Depth: 174 ft bgs

Time	Time Step (min)	Water Level (ft brp)	Drawdown (ft)	Totalizer ( )	Pumping Rate (gpm)	Temp (°C)	DO (mg/L)	Specific Cond. (µS/cm)	Cond. (µS/cm)	TDS (mg/L)	pH	ORP (mV)	Turbitity (NTU)	Total gallons
13:07	47	151.6	133.03		2.0									
13:10	50	159.5	140.93	63240.7	1.9									
13:13:30	53	168.0	149.43	63247.7	Stop pumping. PWL approaching pump									81.2
14:00:30	100	95.7	77.13	63247.7	Resume pumping @ 3.1 gpm. 14:04 ↓Q						to		aerated/milky	
14:05	105	141.5	122.93	63261.9	2.8	19.3	4.8	11,483	10193	7799.6	7.29	-90.1	23.3	
14:10	110	149.0	130.43	63269.3	1.5	19.0	2.9	11,513	10189	7820.0	7.31	-103.9	58.1	
14:15	115	156.2	137.63	63276.2	1.4	19.4	2.5	11,346	10141	7684.0	7.31	-113.6	470	
14:20	120	162.4	143.83	63282.7	1.3	20.0	2.1	10,647	9640	7235.2	7.33	-123.4	432	
14:25	125	167.1	148.53	63288.8	1.2	20.8	1.7	10,578	9726	7194.4	7.32	-128.1	426	
14:28:15	128			63292.1	Stop Pumping. PWL approaching pump									125.6
14:53	153	116.0	97.43											
14:55:47	156			63292.1	Resume pumping @ 3.6 gpm. 14:58 ↓Q									
15:00	160	145.1	126.53	63298.2	~2.1	20.6	3.1	11079	10282	7738.4	7.32	-118.6	23.0	
15:05	165	160.8	142.23	63308.8	2.1	19.9	1.9	11564	10439	7860.8	7.30	-120.9	31.9	
15:09	169	169.0	150.43	63316.2	2.1	Stop Pumping. PWL approaching pump								149.7
15:59:47	220			63316.2	Resume pumping. Recovering W.L. 96.8 ft brp							~2 gpm		
16:00	220	Begin collecting		Water Samples for laboratory analysis										
16:02	222				~2 gpm	20.1	0.6	11848	10722	8058	7.31	-139.3	5.57	
16:05	225	148.5												
16:09:05	229			63348.0	Stop Pumping. PWL approaching pump.									181.5

Stabilization Criteria:

3 to 5 minute recordings with 3 consecutive readings within:

pH: +/- 0.1 unit
Cond: +/- 3%
ORP: +/- 10 mV
Turb: +/- 10%
DO: +/- 10%
Desired Flow Rate: 100 to 500 mL/min

Form Created: 29-Sep-13

GEOSCIENCE
GEOSCIENCE Support Services, Inc.
P.O. Box 220, Claremont, CA 91711
Tel: (909) 451-6650 Fax: (909) 451-6638
www.gssiwater.com

CONFIDENTIAL DRAFT
Subject to Revision

ISOLATED AQUIFER ZONE SAMPLING DATA SHEET

Zone No. 1

Client: RBF/MPWSP - Exploratory Borehole Drilling
Borehole Name/Number: ML-3 (Hwy 1 South)
Sonic Casing Dia: 8 in Sonic Casing Depth: 164 ft bgs
Static WL: 18.57 ft brp
RP: 6.0 ft ags

Logged By: N. Reynolds (GSSI) & Cascade Drilling
Test Date: 1-11-14 / Sat
Screened Interval: 180-190 ft bgs
Reference Point Elevation: _____ ft amsl
Pump Depth: 174 ft bgs

Time	Time Step (min)	Water Level (ft brp)	Drawdown (ft)	Totalizer (gal)	Pumping Rate (gpm)	Temp (°C)	DO (mg/L)	Specific Cond. (µS/cm)	Cond. (µS/cm)	TDS (mg/L)	pH	ORP (mV)	Turbitity (NTU)	Total gallons
	12:20	18.57		63166.5										
16:22		126.2		63343.4	Recovering W.L. (Totalizer wound back)									
16:22:58	Pump on @		~1.9 gpm			20.2	5.0	11163	10253	7752	7.33	-108.5	24.5	
16:28:45				63357.5	Step Pumping: PWL approaching pump									191.0
16:48:11	Pump on @		~2.0 gpm											
16:54					~2.0	19.6	2.9	11438	10196	7697	7.33	-126		
16:57:10	Stop pumping.	PWL by pump		63380.0										213.5
17:15:06	Pump on @ ~2 gpm													
17:17						20.2	4.7	10952	9992	7656	7.35	-121.3	92.3	
17:20					1.5	20.3	4.1	11751	10694	7990	7.27	-99.7		
17:23		178.4				19.7	3.7	11704	10507	7942.4	7.28	-105.8	65.2	
17:25:42	Pump off. Complete Sampling			63397.7										231.2

Stabilization Criteria:

3 to 5 minute recordings with 3 consecutive readings within:

pH: +/- 0.1 unit
Cond: +/- 3%
ORP: +/- 10 mV
Turb: +/- 10%
DO: +/- 10%
Desired Flow Rate: 100 to 500 mL/min

Form Created: 29-Sep-13

GEOSCIENCE

GEOSCIENCE Support Services, Inc.
P.O. Box 220, Claremont, CA 91711
Tel: (909) 451-6650 Fax: (909) 451-6638
www.gssiwater.com

CONFIDENTIAL
DRAFT
Subject to Revision

ISOLATED AQUIFER ZONE SAMPLING DATA SHEET

Zone No. 2

Client: RBF/MPWSP - Exploratory Borehole Drilling
Borehole Name/Number: ML-3 (Hwy 1 South)
Sonic Casing Dia: 8 in Sonic Casing Depth: 82 ft bgs
Static WL: 18.86 ft brp (10.86 ftbgs)
RP: 8.0 ft ags (Top of 8" casing)

Logged By: N. Reynolds (GSSI) & Cascade Drilling (W.L.'s)
Test Date: 1-13-14/Mon
Screened Interval: 103-113 ft bgs
Reference Point Elevation: _____ ft amsl
Pump Depth: 95 ft bgs

0.68 constant

Time	Time Step (min)	Water Level (ft brp)	Drawdown (ft)	Totalizer (gal)	Pumping Rate (gpm)	Temp (°C)	DO (mg/L)	Specific Cond. (µS/cm)	Cond. (µS/cm)	TDS (mg/L)	pH	ORP (mV)	Turbitity (NTU)
9:03:55	0	18.86	0	63473.0	Pump on @ 3.5 gpm - Water clear. 0906:50 ↓Q slightly								
9:11	7	49.9	31.04		2.2	9:11:34 ↑Q slightly to 2.4 gpm.							
9:15	11	57.1	38.24		2.4	↑Q slightly. Water aerated. No odor.							11.6
9:21	17	67.2	48.34		2.8								8.90
9:55	51	76.3	57.44	63618.0	3.1	19.8	1.3	7420	6687	5045.6	6.90	-116.4	2.91
10:05	61	78.3	59.44	63649.1	3.1	19.7	0.1	7385	6637	5018.4	6.96	-136.3	24.0
10:15	71	79.9	61.04	63680.4	3.1	19.7	0.1	7402	6653	5032.0	6.96	-142.1	4.56
10:25	81	79.8	60.94	63711.8	3.1	19.7	0.1	7394	6650	5025.2	6.95	-145.3	4.17
10:35	91	79.7	60.84	63743.0	3.1	19.8	0.1	7387	6648	5025.2	6.95	-148.0	1.88
10:45	101	79.9	61.04	63774.2	3.1	19.8	0.1	7363	6632	5011.6	6.95	-150.0	2.10
10:55	111	80.3	61.44	63805.5	3.1	19.8	0.1	7368	6629	5011.6	6.95	-151.0	2.03
11:05	121	80.3	61.44	63836.7	3.1	19.8	0.1	7458	6714	5072.8	6.94	-151.6	1.51
11:15	131	80.3	61.44	63867.9	3.1	19.8	0.1	7434	6696	5052.4	6.94	-151.5	1.02
11:25	141	80.3	61.44	63899.0	3.1	19.8	0.1	7447	6709	5066.0	6.94	-151.7	0.96
11:35	151	80.2	61.34	63930.1	3.1	19.8	0.1	7439	6701	5059.2	6.94	-151.4	0.99
11:45	Begin	collecting	WQ	samples for	lab analysis.		Samples placed on ice.						
12:05	181	78.9	60.04	64029.3	3.3	19.8	0.0	7473	6721	5079.6	6.93	-149.4	7.24
12:13	189												2.58
12:18:05	194			64079.7	Pump	off.	Total Volump pumped = 606.7 gallons						
13:41	277	20.7	1.84										

Flow thru cell = 1218.5 mL/min

Stabilization Criteria:

3 to 5 minute recordings with 3 consecutive readings within:

pH: +/- 0.1 unit
Cond: +/- 3%
ORP: +/- 10 mV
Turb: +/- 10%
DO: +/- 10%
Desired Flow Rate: 100 to 500 mL/min

Form Created: 29-Sep-13

Zone #1 As Built

ISOLATED AQUIFER ZONE CONSTRUCTION

Zone No. 1

163.5 to 173.5 ft bgs

8" Sonic casing to 152 ft bgs.
Open annulus above upper bentonite seal.

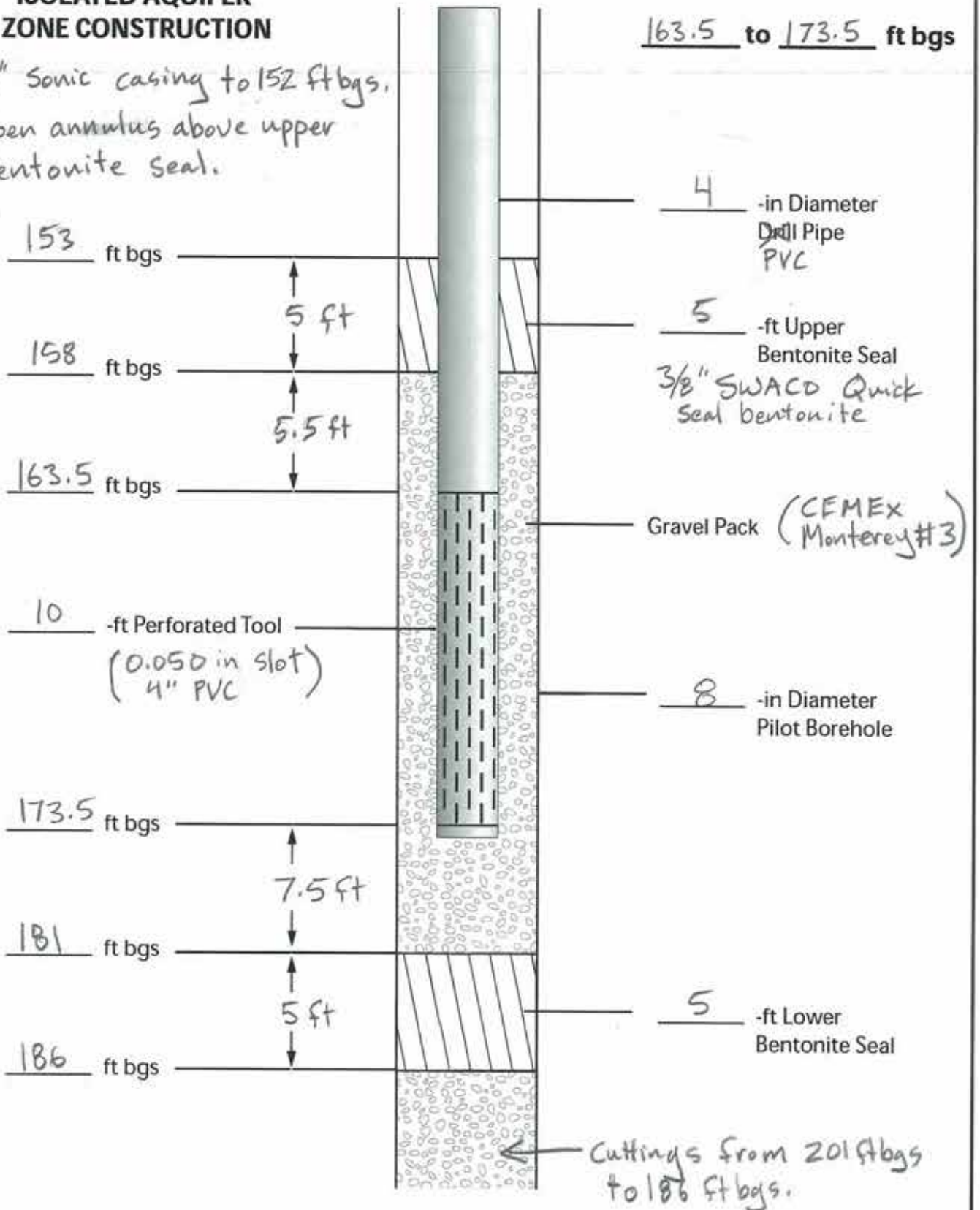

GEOSCIENCE GEOSCIENCE Support Services, Incorporated P.O. Box 220, Claremont, CA 91711 Tel: (909) 451-6650 Fax: (909) 451-6638 www.gssiwater.com	Client: RBF Consulting Inc. Well Name/Number: MPWSP ML-4 (Hwy 1 Middle) Date: 12-4-13 / Wed

Zone#2 As Built

ISOLATED AQUIFER ZONE CONSTRUCTION

Zone No. 2

74.5 to 84.5 ft bgs

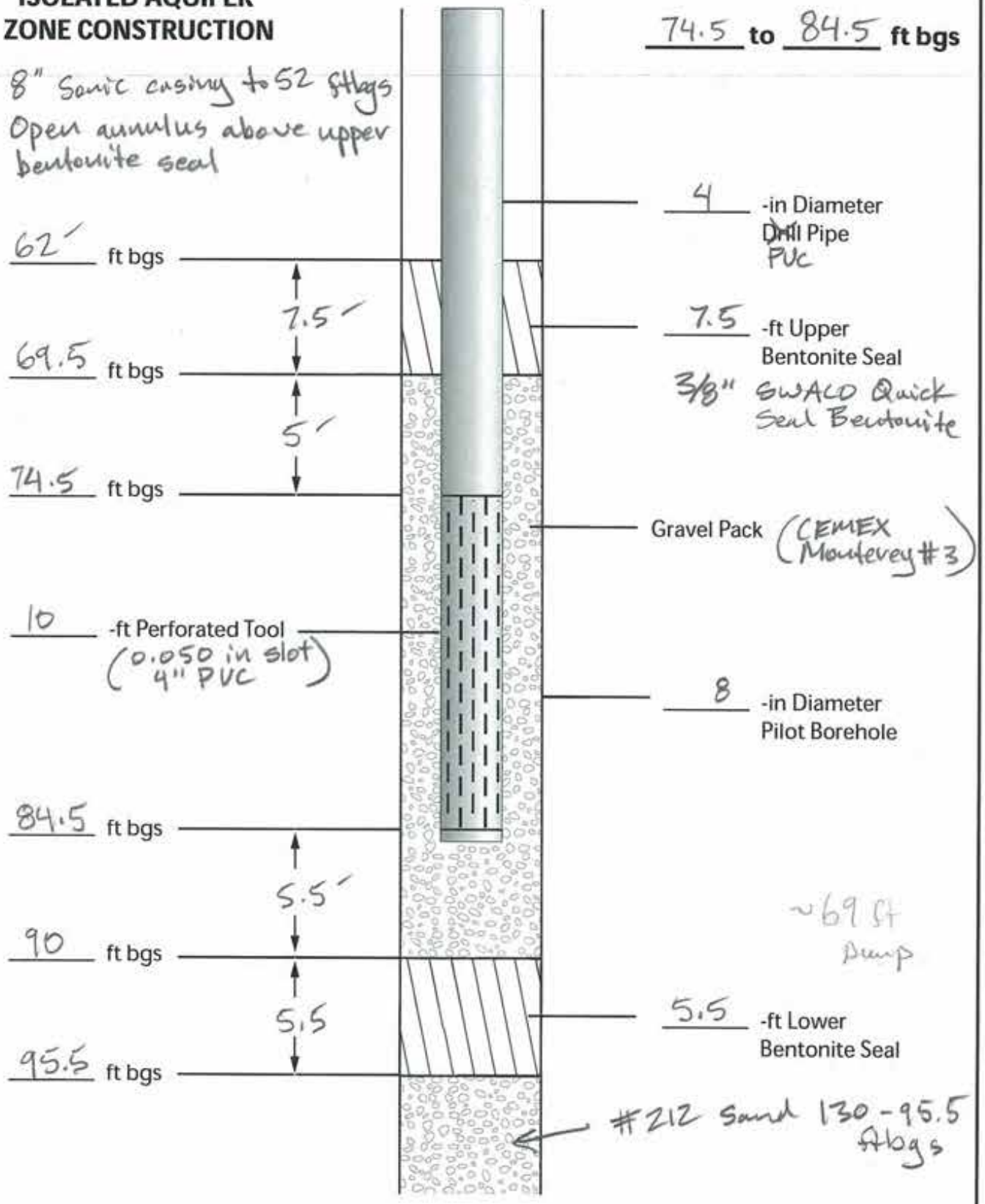

GEOSCIENCE GEOSCIENCE Support Services, Incorporated P.O. Box 220, Claremont, CA 91711 Tel: (909) 451-6650 Fax: (909) 451-6638 www.gsiwater.com	Client: RBF Consulting Inc. Well Name/Number: MPWSP ML-4 (Hwy 1 Middle) Date: 12-6-13 / Fri

GEOSCIENCE

GEOSCIENCE Support Services, Inc.
P.O. Box 220, Claremont, CA 91711
Tel: (909) 451-6650 Fax: (909) 451-6638
www.gssiwater.com

CONFIDENTIAL
DRAFT
Subject to Revision

ISOLATED AQUIFER ZONE SAMPLING DATA SHEET

Zone No. 1

Client: RBF/MPWSP - Exploratory Borehole Drilling
Borehole Name/Number: ML-4 (Hwy 1 Middle)
Sonic Casing Dia: 8 in Sonic Casing Depth: 152 ft bgs
Static WL: 35.0 ft brp (27.33 ftbgs)
RP: 7.67 ftags (top of casing)

Logged By: N. Reynolds (GSSI) & Cascade Drilling
Test Date: 12-4-13 / Wed
Screened Interval: 163.5 - 173.5 ft bgs
Reference Point Elevation: _____ ft amsl
Pump Depth: 153.5 ft bgs
Note: TDS Constant Set to 0.68

Time	Time Step (min)	Water Level (ft brp)	Drawdown (ft)	Totalizer (gal)	Pumping Rate (gpm)	Temp (°C)	DO (mg/L)	Specific Cond. (µS/cm)	Cond. (µS/cm)	TDS (mg/L)	pH	ORP (mV)	Turbitity (NTU)
14:21:33	0	35.0	0	36581.3	42.5	Pump on. ↓ 2 @ 14:23 (drawing down to pump)							
14:26		113.8	78.8	-	17.6								
14:29				↑Q to	18.4								
14:30		105.3	70.3	↑Q to	18.5								
14:35		108.6	73.6	↑Q to	20.2								
14:38		118.08 (dropping)	83.0	↑Q to	22.7								
14:45		123.25	88.25		21.9								
14:58		123.4	88.40		22.0								
15:00		126.0	91.0	↑Q to	22.8								
15:17				↑Q to	~24								
15:35	73	135.2	100.2	38251.1	24.7	17.6	1.3	30316	26034	20617.60	6.74	49.6	5.13
15:45	83	133.8	98.8	38497.1	24.6	17.6	0.6	30410	26103	20678.8	6.75	17.2	5.63
15:55	93	136.9	101.9	38742.5	24.5	17.6	0.4	30298	26003	20746.8	6.76	-1.7	8.66
16:05	103	136.5	101.5	38993.7	25.1	17.6	0.1	30780	26410	20930.4	6.77	-10.8	5.11
16:15	113	136.2	101.2	39244.8	25.1	17.5	0.1	30802	26416	20944.0	6.77	-17.3	6.84
16:25	123	136.3	101.3	39495.8	25.1	17.5	0.0	30824	26422	20957.6	6.77	-24.3	4.67
16:35	133	135.6	100.6	39746.4	25.1	17.5	0.0	30832	26443	20964.4	6.77	-31.2	3.23
16:45	143	134.4	99.4	39996.0	25.0	17.5	0.0	30845	26438	20971.2	6.77	-37.4	5.16
16:55	153	135.5	100.5	40246.5	25.1	17.5	0.0	30853	26436	20978.0	6.78	-43.4	5.51
17:17	175	135.8	100.8	40799.8	25.2	17.5	0.1	30860	26445	20984.8	6.78	-53.8	3.89

Stabilization Criteria:

3 to 5 minute recordings with 3 consecutive readings within:

pH: +/- 0.1 unit
Cond: +/- 3%
ORP: +/- 10 mV
Turb: +/- 10%
DO: +/- 10%
Desired Flow Rate: 100 to 500 mL/min

762.5 mm Hg

Flow through cell 1190.5 mL/min

Form Created: 29-Sep-13

GEOSCIENCE

GEOSCIENCE Support Services, Inc.
P.O. Box 220, Claremont, CA 91711
Tel: (909) 451-6650 Fax: (909) 451-6638
www.gssiwater.com

CONFIDENTIAL DRAFT
Subject to Revision

ISOLATED AQUIFER ZONE SAMPLING DATA SHEET

Zone No. 1

Client: RBF/MPWSP - Exploratory Borehole Drilling
Borehole Name/Number: ML-4
Sonic Casing Dia: 8 in Sonic Casing Depth: 152 ft bgs
Static WL: 35.0 ft brp
RP: 7.67 ftags (Top of casing)

Logged By: N. Reynolds (GSSI) & Cascade Drilling
Test Date: 12-4-13 / Wed
Screened Interval: 163.5 - 173.5 ft bgs
Reference Point Elevation: _____ ft amsl
Pump Depth: 153.5 ft bgs

0.68 constant

Time	Time Step (min)	35.0 Water Level (ft brp)	Drawdown (ft)	Totalizer (gal)	Pumping Rate (gpm)	Temp (°C)	DO (mg/L)	Specific Cond. (µS/cm)	Cond. (µS/cm)	TDS (mg/L)	pH	ORP (mV)	Turbitity (NTU)
17:31	189	136.0	101.0	41152.8	25.2	17.5	0.1	30861	26473	20984.8	6.78	-60.1	3.20
17:40	198	136.2	101.2	41379.5	25.2	17.5	0.1	30865	26464	20984.8	6.78	-62.5	3.88
17:50	208	135.9	100.9	41631.9	25.2	17.5	0.1	30871	26469	20991.6	6.78	-64.8	3.77
18:00	218	136.2	101.2	41884.3	25.2	17.5	0.1	30856	26458	20984.8	6.78	-68.4	2.04
18:10	228	136.0	101.0	42136.2	25.2	17.5	0.1	30873	26468	20991.6	6.78	-70.1	2.94
18:20	238	135.7	100.7	42388.0	25.2	17.5	0.1	30873	26476	20991.6	6.78	-72.7	3.24
18:30	248	135.9	100.9	42640.0	25.2	17.5	0.1	30869	26467	20984.8	6.78	-75.3	4.05
18:40	258	135.2	100.2	42891.6	25.2	17.5	0.1	30865	26472	20984.8	6.78	-74.7	6.57
18:50	268	134.0	99.0	43142.5	25.1	17.5	0.1	30871	26478	20991.6	6.78	-76.5	5.45
19:00	278	133.7	98.7	43389.6	24.7	17.5	0.1	30865	26467	20991.6	6.78	-77.9	4.63
19:10	288	133.7	98.7	43637.1	24.8	17.5	0.1	30871	26437	20991.6	6.78	-80.0	9.43
19:20	298	134.1	99.1	43884.6	24.8	17.5	0.1	30867	26440	20991.6	6.78	-81.6	5.42
19:30	308	133.9	98.9	44131.9		17.5	0.1	30866	26451	20991.6	6.78	-83.1	9.59
19:37	315			44305.0	Turn off pump. Turbidity unstable. Will resume tomorrow.								
					7,724 gallons pumped								

Stabilization Criteria:

3 to 5 minute recordings with 3 consecutive readings within:

pH: +/- 0.1 unit
Cond: +/- 3%
ORP: +/- 10 mV
Turb: +/- 10%
DO: +/- 10%
Desired Flow Rate: 100 to 500 mL/min

Form Created: 29-Sep-13

GEOSCIENCE

GEOSCIENCE Support Services, Inc.
P.O. Box 220, Claremont, CA 91711
Tel: (909) 451-6650 Fax: (909) 451-6638
www.gssiwater.com

CONFIDENTIAL DRAFT
Subject to Revision

ISOLATED AQUIFER ZONE SAMPLING DATA SHEET

Zone No. 1

Client: RBF/MPWSP - Exploratory Borehole Drilling
Borehole Name/Number: ML-4
Sonic Casing Dia: 8 in Sonic Casing Depth: 152 ft bgs
Static WL: 36.35 ft brp (28.68 ft bgs)
RP: 7.67 ft ags (top of casing)

Logged By: N. Reynolds (GSSI) & Cascade Drilling
Test Date: 12-5-13 / thru
Screened Interval: 163.5 - 173.5 ft bgs
Reference Point Elevation: _____ ft amsl
Pump Depth: 153.5 ft bgs

0.68 constant

Time	Time Step (min)	Water Level (ft brp)	Drawdown (ft)	Totalizer (gal)	Pumping Rate (gpm)	Temp (°C)	DO (mg/L)	Specific Cond. (µS/cm)	Cond. (µS/cm)	TDS (mg/L)	pH	ORP (mV)	Turbitity (NTU)
7:56:04	0	36.35	0	44299.6	Pump on @		21.3 gpm.						
7:59	3	92.0	55.65										
8:13	17	93.2	56.85		17.9								
8:17	21			↑Q to	18.9								
8:19	23			↑Q to	19.6								
8:22	26	101.4	65.05	↑Q to	20.6								
9:00	64	103.1	66.75	45544.2	20.3	17.7	0.1				6.8	42.7	0.62
9:30	recalibrate YSI pH & Sp. Cond.												
09:40	104	103.5	67.15	46348.5	20.1	17.7	0.0	30680	26411	20855.6	6.77	16.8	0.39
09:50	114	103.3	66.95	46550.7	20.2	17.8	0.0	30678	26444	20855.6	6.76	2.8	0.50
10:00	124	103.7	67.35	46753.7	20.3	17.8	0.0	30674	26436	20855.6	6.76	-6.8	0.50
10:10	134	103.6	67.25	46956.7	20.3	17.8	0.0	30671	26437	20855.6	6.76	-13.8	0.48
10:25	Collect Water Quality samples for laboratory analysis. Place samples on ice.												
11:17	201	104.5	68.15	48324.1	20.4	17.8	0.0	30669	26448	20855.6	6.76	-39.5	0.63
11:24:40	~209			48479.1	Pump off.	Total Volume pumped today = 4179.5 gallons							

Stabilization Criteria:

3 to 5 minute recordings with 3 consecutive readings within:

pH: +/- 0.1 unit
Cond: +/- 3%
ORP: +/- 10 mV
Turb: +/- 10%
DO: +/- 10%
Desired Flow Rate: 100 to 500 mL/min

Form Created: 29-Sep-13

GEOSCIENCE

GEOSCIENCE Support Services, Inc.
P.O. Box 220, Claremont, CA 91711
Tel: (909) 451-6650 Fax: (909) 451-6638
www.gssiwater.com

CONFIDENTIAL
DRAFT
Subject to Revision

ISOLATED AQUIFER ZONE SAMPLING DATA SHEET

Zone No. 2

Client: RBF/MPWSP - Exploratory Borehole Drilling
Borehole Name/Number: ML-4 (Hwy 1 Middle)
Sonic Casing Dia: 8 in Sonic Casing Depth: 52 ft bgs
Static WL: 35.8 ft brp (27.8 ftbgs)
RP: 8.0 ft ags (Top of 8")

Logged By: N. Reynolds (GSSI) & Cascade Drilling
Test Date: 12-6-13 / Fri
Screened Interval: 74.5 - 84.5 ft bgs
Reference Point Elevation: _____ ft amsl
Pump Depth: 69 ft bgs

0.68 Gustavt

Time	Time Step (min)	Water Level (ft brp)	Drawdown (ft)	Totalizer (gal)	Pumping Rate (gpm)	Temp (°C)	DO (mg/L)	Specific Cond. (µS/cm)	Cond. (µS/cm)	TDS (mg/L)	pH	ORP (mV)	Turbitity (NTU)
10:00	0	35.8	0	48465.4	9.5	Pump on.							
10:04	4	48.8	13.0	–	9.5								
10:07	7	49.6	13.8	–	9.1								
10:09	9	51.7	15.9	–	10.5	(↑Q @ 10:09)							
10:33	33	59.0	23.2	48855.7	14.4	17.4	0.7	11,694	9995	7962.8	6.65	-12.9	22.5
10:40	40	59.5	23.7	48956.3	14.4	17.4	0.5	12,042	10,295	8187.2	6.64	-34.4	15.5
11:15	75	61.1	25.3	49458.0	14.3	17.6	0.3	12,717	10,914	8649.6	6.59	-61.3	3.38
11:25	85	61.6	25.8	49601.5	14.4	17.6	0.2	12,780	10,965	8697.2	6.59	-64.6	2.75
11:35	95	62.0	26.2	49745.1	14.4	17.5	0.2	12,845	11,025	8731.2	6.58	-69.4	1.74
11:45	105	62.3	26.5	49888.5	14.3	17.6	0.1	12866	11,058	8765.2	6.57	-73.5	1.36
11:55	115	62.5	26.7	50031.9	14.3	17.7	0.1	12899	11,100	8765.2	6.57	-79.7	1.15
12:05	125	62.8	27.0	50175.2	14.3	17.7	0.1	12914	11,131	8792.4	6.57	-86.1	0.92
12:15	135	63.1	27.3	50318.7	14.4	17.7	0.1	12933	11,141	8799.2	6.57	-92.8	0.94
12:25	Collect WQ samples for laboratory analysis. Samples placed on ice. Note: water has sulfur odor.												
13:01	181	64.2	28.4	50986.1	14.5	17.7	0.1	12987	11,168	8840.0	6.56	-124.6	0.78
13:10	190	64.4	28.6										
13:11:56~192		Pump off.		51141.8									
				Total Volume pumped = 2,676.4 gallons									
13:51		40.75	4.95										
14:20		40.10	4.30										

Stabilization Criteria:

3 to 5 minute recordings with 3 consecutive readings within:

pH: +/- 0.1 unit
Cond: +/- 3%
ORP: +/- 10 mV
Turb: +/- 10%
DO: +/- 10%
Desired Flow Rate: 100 to 500 mL/min

Flow Rate (YSI) = 1371 mL/min

Form Created: 29-Sep-13

ISOLATED AQUIFER ZONE CONSTRUCTION

Zone#1 As Built

Zone No. 1

152 to 162 ft bgs

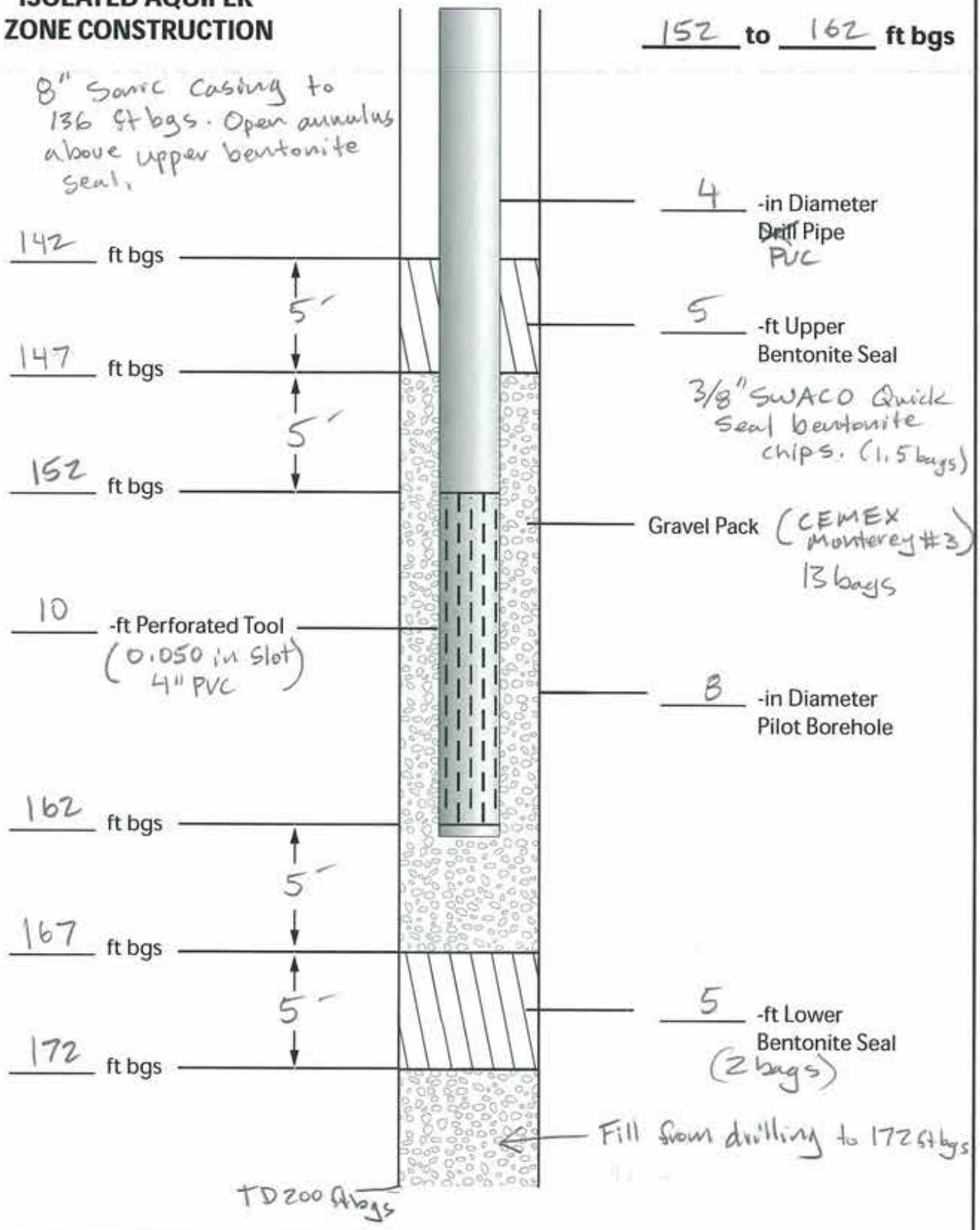

GEOSCIENCE GEOSCIENCE Support Services, Incorporated P.O. Box 220, Claremont, CA 91711 Tel: (909) 451-6650 Fax: (909) 451-6638 www.gsiwater.com	Client: RBF Consulting Inc. Well Name/Number: MPWSP Exploratory Borehole ML-6 Date: 11-21-13 / Thu

Zone #2 - As-Built

ISOLATED AQUIFER ZONE CONSTRUCTION

Zone No. 2

100 **to** 110 **ft bgs**

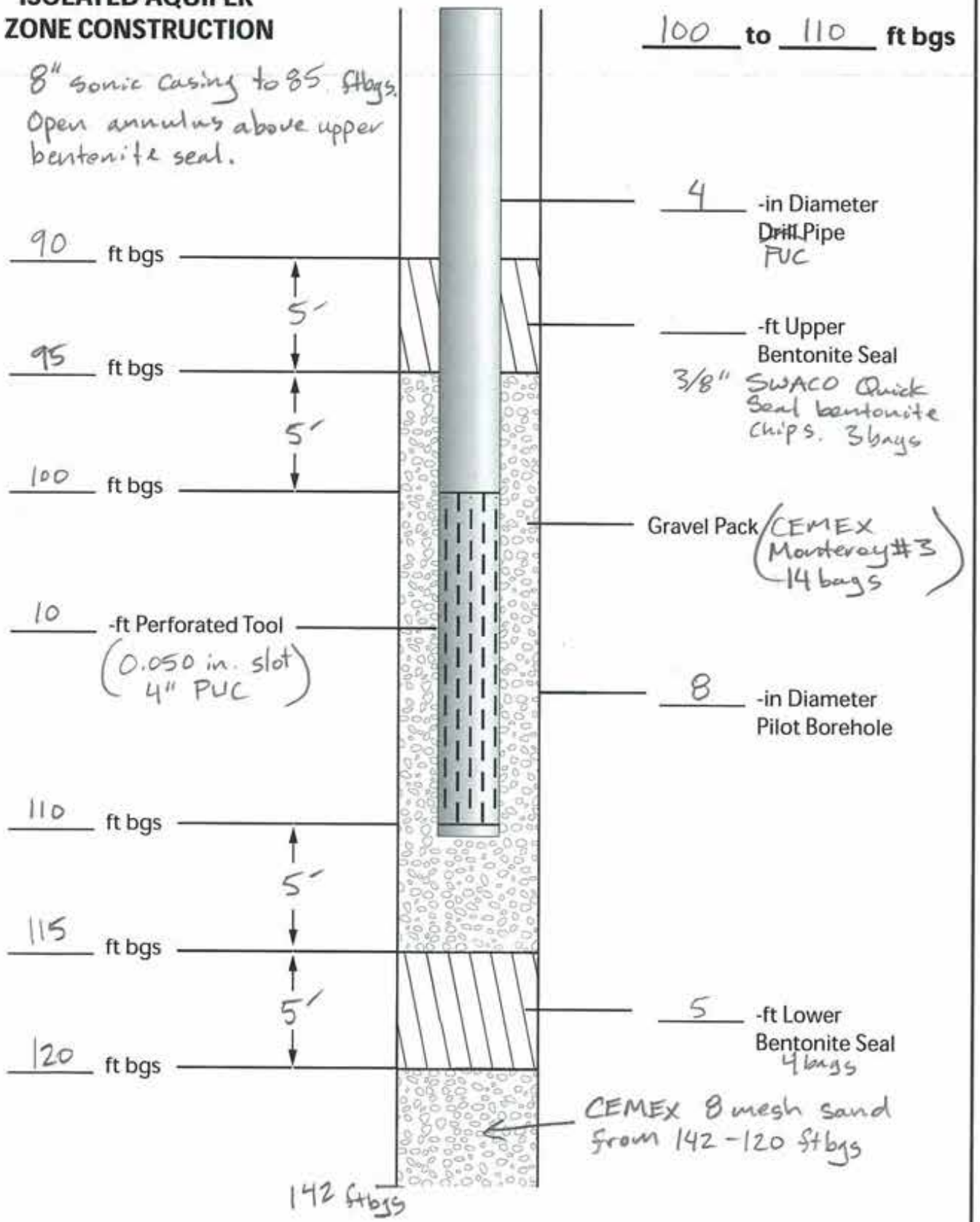

GEOSCIENCE

GEOSCIENCE Support Services, Incorporated
P.O. Box 220, Claremont, CA 91711
Tel: (909) 451-6650 Fax: (909) 451-6638
www.gssiwater.com

Client: RBF Consulting Inc

Well Name/Number: MPWSP ML-6 (MBARI)

Date: 11-22-13/Fri & 11-23-13/Sat

GEOSCIENCE

GEOSCIENCE Support Services, Inc.
P.O. Box 220, Claremont, CA 91711
Tel: (909) 451-6650 Fax: (909) 451-6638
www.gssiwater.com

CONFIDENTIAL
DRAFT
Subject to Revision

ISOLATED AQUIFER ZONE SAMPLING DATA SHEET

Zone No. 1

Client: RBF/MPWSP - Exploratory Borehole Drilling
Borehole Name/Number: ML-6 (MBARI)
Sonic Casing Dia: 8 in Sonic Casing Depth: 136 ft bgs
Static WL: 15.74 ft brp
RP: 7.65

Logged By: N. Reynolds (GSSI)
Test Date: 11-22-13 / Fri.
Screened Interval: 152-162 ft bgs
Reference Point Elevation: _____ ft amsl
Pump Depth: 143 ft bgs

Note: TDS Constant is 0.65

Time	Time Step (min)	15.74 Water Level (ft brp)	Drawdown (ft)	Totalizer (gal)	Pumping Rate (gpm)	Temp (°C)	DO (mg/L)	Specific Cond. (µS/cm)	Cond. (µS/cm)	TDS (mg/L)	pH	ORP (mV)	Turbitity (NTU)
12:26	193	120.2	104.46	22381.0	42.9	16.6	0.1	48043	40368	31226	6.63	-73.9	3.23
12:36	203	120.05	104.31	22810.0	42.9	16.5	0.1	48065	40302	31245.5	6.63	-77.4	1.71
12:46	213	120.2	104.46	23238.5	42.9	16.6	0.1	48074	40404	31246.5	6.63	-79.5	2.45
12:56	223	120.4	104.66	23666.4	42.8	16.6	0.1	48074	40377	31245.5	6.63	-81.6	1.48
13:06	233	120.4	104.66	24094.0	42.8	16.6	0.1	48095	40386	31258.5	6.64	-85.1	2.81
13:16	243	120.5	104.76	24521.5	42.8	16.5	0.1	48144	40356	31284.5	6.63	-88.0	2.24
13:26	253	120.4	104.66	24949.0	42.8	16.5	0.1	48132	40389	31284.5	6.63	-90.5	1.26
13:35	Sample for laboratory WQ analysis.												
14:16		120.70	104.96	27087.3	42.8	16.4	0.1	48218	40330	31343	6.62	-104.6	1.17
14:22:27				27358.0	Pump Off.								
							Total gallons pumped = 11,838.5						

Stabilization Criteria:

3 to 5 minute recordings with 3 consecutive readings within:

pH: +/- 0.1 unit
Cond: +/- 3%
ORP: +/- 10 mV
Turb: +/- 10%
DO: +/- 10%
Desired Flow Rate: 100 to 500 mL/min

Form Created: 29-Sep-13

GEOSCIENCE

GEOSCIENCE Support Services, Inc.
P.O. Box 220, Claremont, CA 91711
Tel: (909) 451-6650 Fax: (909) 451-6638
www.gssiwater.com

CONFIDENTIAL
DRAFT
Subject to Revision

ISOLATED AQUIFER ZONE SAMPLING DATA SHEET

Zone No. 1

Client: RBF/MPWSP - Exploratory Borehole Drilling
Borehole Name/Number: ML-6 (MBARI)
Sonic Casing Dia: 8 in Sonic Casing Depth: 136 ft bgs
Static WL: 15.74 ft brp 8.09 ftbgs taken by Cascade
RP: 7.65 ft ags

Logged By: N. Reynolds (GSSI) & Cascade
Test Date: 11-22-13 / Fri
Screened Interval: 152-162 ft bgs
Reference Point Elevation: _____ ft amsl
Pump Depth: 143 ft bgs YSI Professional plus.

Note: TDS Constant is 0.65

Time	Time Step (min)	Water Level (ft brp)	Drawdown (ft)	Totalizer (gal)	Pumping Rate (gpm)	Temp (°C)	DO (mg/L)	Specific Cond. (µS/cm)	Cond. (µS/cm)	TDS (mg/L)	pH	ORP (mV)	Turbitity (NTU)
09:13	0	15.74	0	15519.5		09:13	Pump on						
09:39		54.4	38.66		19.5								
09:54:35		63.1	47.36		~25.0	↑Q							
10:05		68.0	52.26		23.9								
10:06						↑Q							
10:10		76.0	60.26		~29	↑Q							
10:13						↑Q							
10:23	70	116.1	100.36		43.2								
10:26	73			17226.5	~43.2								
10:36	83	118.1	102.36	17658.0	43.2	16.7	0.1	47904	40276	31141.5	6.61	-8.6	11.6
10:46	93	118.8	103.06	18088.5	43.1	16.6	0.4	47463	39864	30849	6.62	-19.6	6.51
10:56	103	119.2	103.46	18518.5	43.0	16.6	0.3	47565	39992	30927	6.62	-34.1	5.73
11:06	113	119.6	103.86	18948.0	43.0	16.6	0.2	47726	40094	31031	6.62	-42.5	5.62
11:16	123	119.9	104.16	19377.3	42.9	16.6	0.2	47791	40169	31063.5	6.63	-49.1	7.49
11:26	133	120.0	104.26	19806.8	43.0	16.5	0.1	47894	40120	31135	6.63	-55.1	8.40
11:36	143	120.0	104.26	20236.4	43.0	16.5	0.1	47920	40161	31148	6.62	-59.2	3.53
11:46	153	120.2	104.46	20665.5	42.9	16.5	0.1	47975	40185	31180.5	6.62	-64.5	8.44
11:56	163	120.0	104.26	21094.5	42.9	16.5	0.1	47990	40231	31193.5	6.63	-64.6	4.55
12:06	173	120.0	104.26	21523.0	42.9	16.5	0.1	48024	40265	31219.5	6.63	-67.1	8.31
12:16	183	120.3	104.56	21952.0	42.9	16.6	0.1	48026	40279	31213.0	6.63	-70.1	2.35

Stabilization Criteria:

3 to 5 minute recordings with 3 consecutive readings within:

pH: +/- 0.1 unit
Cond: +/- 3%
ORP: +/- 10 mV
Turb: +/- 10%
DO: +/- 10%
Desired Flow Rate: 100 to 500 mL/min 1230 mL/min through Flowthrucell.

Form Created: 29-Sep-13

GEOSCIENCE

GEOSCIENCE Support Services, Inc.
P.O. Box 220, Claremont, CA 91711
Tel: (909) 451-6650 Fax: (909) 451-6638
www.gssiwater.com

CONFIDENTIAL
DRAFT
Subject to Revision

ISOLATED AQUIFER ZONE SAMPLING DATA SHEET

Zone No. 2

Client: RBF/MPWSP - Exploratory Borehole Drilling
Borehole Name/Number: ML-6 (MBARI)
Sonic Casing Dia: 8 in Sonic Casing Depth: 85 ft bgs
Static WL: 15.00 ft brp 9.58 ft bgs
RP: 5.42 ft agls (ToC)

Logged By: N. Reynolds (GSSI) & Cascade Drilling
Test Date: 11-23-13 / SAT
Screened Interval: 100 - 110 ft bgs
Reference Point Elevation: _____ ft amsl
Pump Depth: 90 ft bgs

Note: TDS Constant set to 0.68

Time	Time Step (min)	Water Level (ft brp)	Drawdown (ft)	Totalizer (gallons)	Pumping Rate (gpm)	Temp (°C)	DO (mg/L)	Specific Cond. (µS/cm)	Cond. (µS/cm)	TDS (mg/L)	pH	ORP (mV)	Turbitity (NTU)
10:19:54	0	15.00	—	27347.0	Pump on @	36.4 gpm.	↓Q @ 10:21	to 27.0 gpm					
10:49:47	↑Q	to 31.8 gpm PWL=	35.6 ft brp										
10:52	↑Q	to 40.3 gpm PWL	= 40.1 ft brp										
10:54:50	↑Q (valve all the way open)	to 49.6	gpm. PWL=	47.4 ft brp.									
11:00	40	48.6	33.6	28472.3	49.3								
11:10	50	49.2	34.2	28979.0	50.7								13.0
11:20	60	49.6	34.6	29464.5	48.6								7.75
11:30	70	49.8	34.8	29960.0	49.6	16.0	0.3	42484	35193	28893.2	6.56	75.3	5.03
11:40	80	49.9	34.9	30455.2	49.5	16.0	0.1	42490	35191	28920.4	6.57	67.8	3.24
11:50	90	50.1	35.1	30950.5	49.5	15.9	0.1	42523	35185	28927.2	6.58	69.0	2.98
12:00	100	50.2	35.2	31445.3	49.5	15.9	0.1	42557	35194	28947.6	6.58	69.1	3.58
12:10	110	50.3	35.3	31940.2	49.5	15.9	0.1	42601	35210	28961.2	6.58	68.8	3.59
12:20	120	50.4	35.4	32435.3	49.5	15.9	0.1	42616	35223	28981.6	6.58	67.4	2.48
12:30	130	50.5	35.5	32930.3	49.5	15.9	0.1	42626	35209	28988.4	6.58	65.6	1.80
12:40	140	50.6	35.6	33425.5	49.5	15.9	0.1	42651	35243	28988.4	6.57	63.5	1.86
12:51	151	50.5	35.5	33969.5	49.5	15.9	0.1	42650	35246	29002.0	6.58	60.6	1.73
13:00	Collect W.Q. samples for laboratory analysis, including MBARI's samples. Samples placed on ice.												
13:36	196	50.8	35.8	36194.4	49.4	15.9	0.1	42650	35274	29042.8	6.57	42.2	1.16
1344	204			36588.5	Pump off.	Total gallons pumped=				9241.5			
1445		16.8											

Stabilization Criteria:

3 to 5 minute recordings with 3 consecutive readings within:

pH: +/- 0.1 unit
Cond: +/- 3%
ORP: +/- 10 mV
Turb: +/- 10%
DO: +/- 10%
Desired Flow Rate: 100 to 500 mL/min

Flow through cell 1223.5 mL/min

Form Created: 29-Sep-13

24-Sep-13

ISOLATED AQUIFER ZONE CONSTRUCTION

Zone No. PR-1 Zone 1

190 **to** 200 **ft bgs**

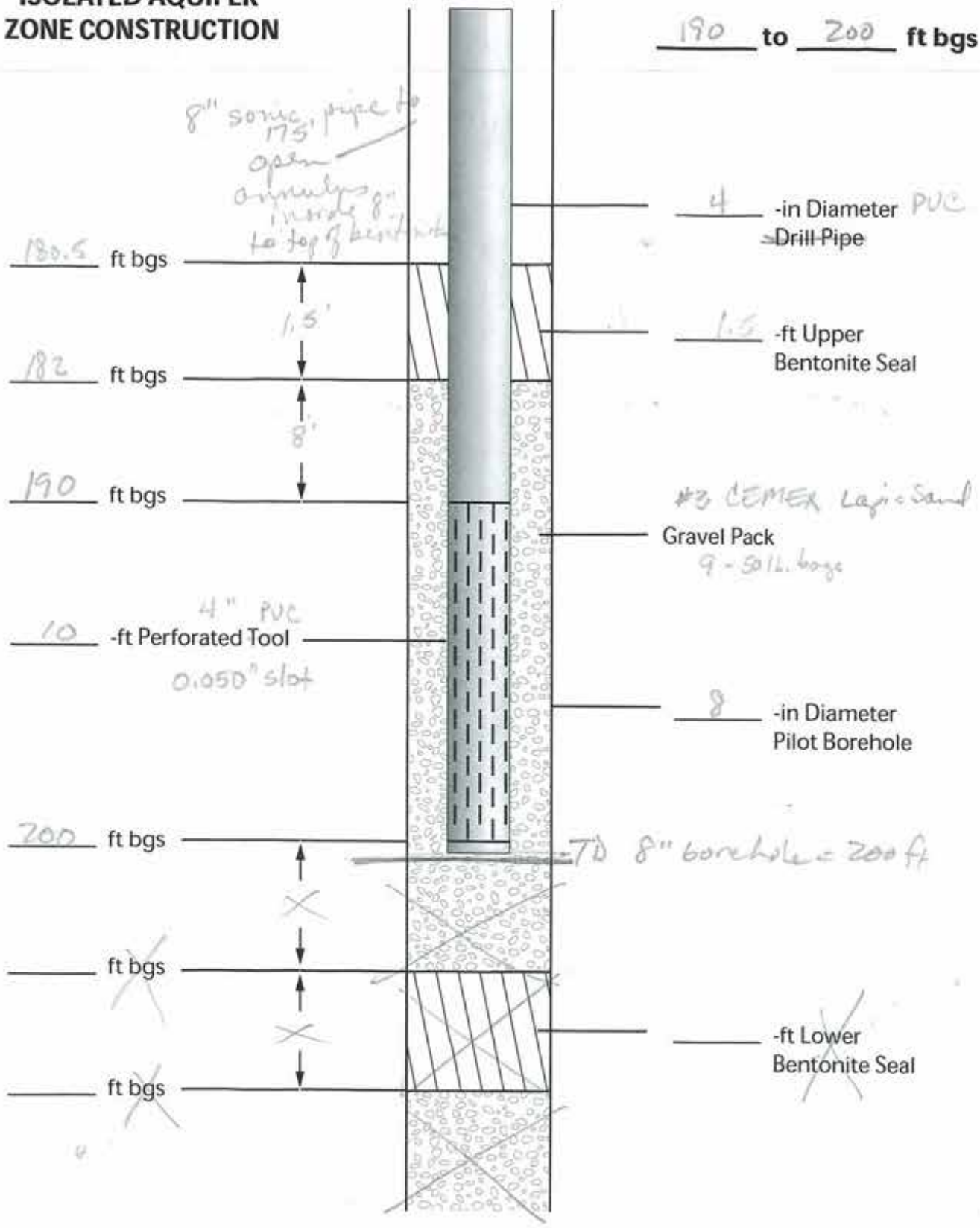

GEOSCIENCE GEOSCIENCE Support Services, Incorporated P.O. Box 220, Claremont, CA 91711 Tel: (909) 451-6650 Fax: (909) 451-6638 www.geoswater.com	Client: RBF/MPWSP Expl Boreholes
	Well Name/Number: PR-1 Zone 1 (190'-200' bgs)
	Date: 24-Sep-13

ISOLATED AQUIFER ZONE CONSTRUCTION

Zone No. PR-1 Zone 2

125 to 135 ft bgs

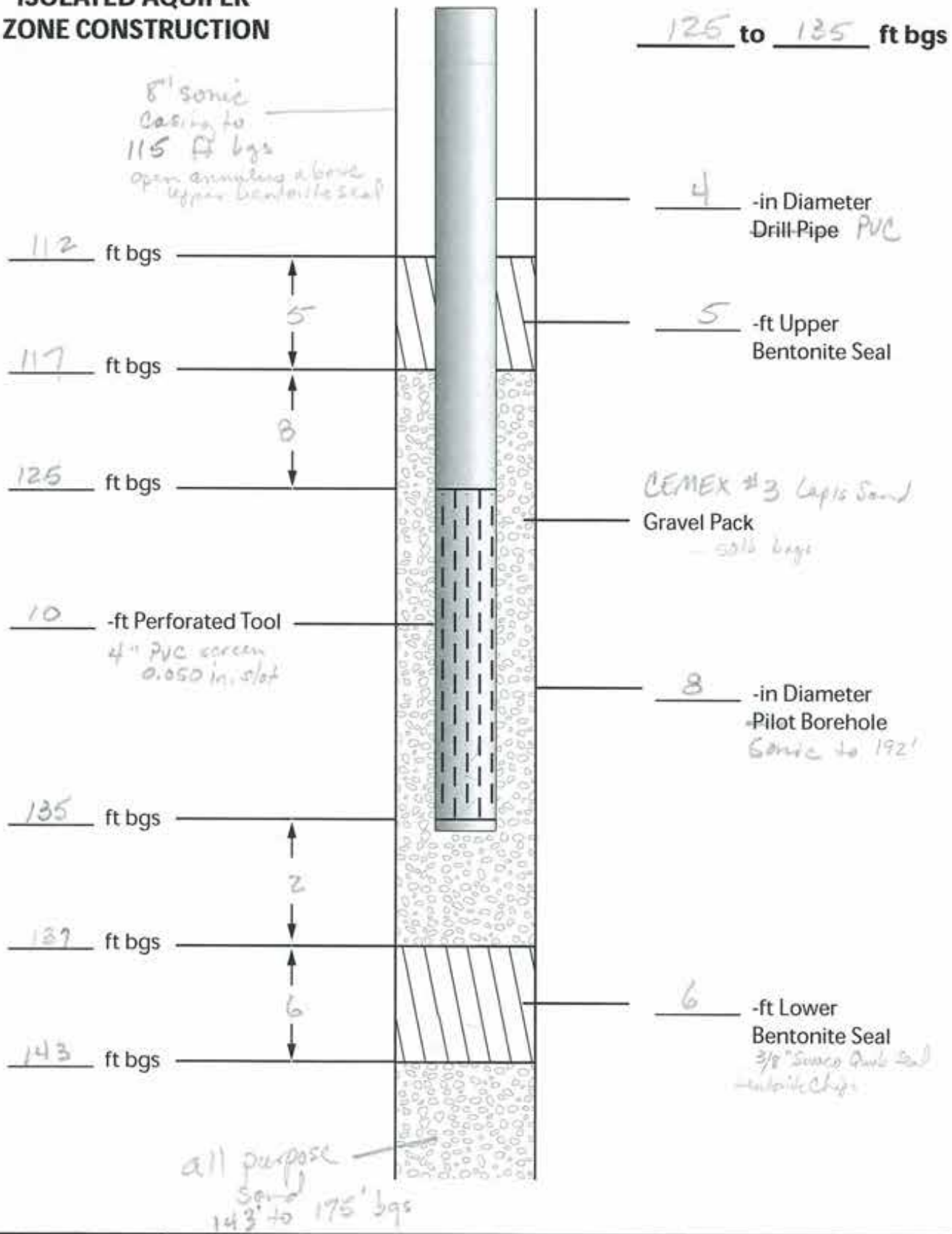

GEOSCIENCE GEOSCIENCE Support Services, Incorporated P.O. Box 220, Claremont, CA 91711 Tel: (909) 451-6650 Fax: (909) 451-6638 www.gsiwater.com	Client: RBF / NIPWSP Exp. Bore Logs Well Name/Number: PR-1 Zone 2 (125'-135' bgs) Date: 25-Sep-13

GEOSCIENCE

GEOSCIENCE Support Services, Inc.
P.O. Box 220, Claremont, CA 91711
Tel: (909) 451-6650 Fax: (909) 451-6638
www.gssiwater.com

WELL SAMPLING DATA SHEET

Client: RBF / LAWSP
Well Name/Number: PR-1 Zone 1 (190-200' bgs)
Well Dia: 4 in Well Depth: 200 ft bgs
Static WL: 12 ft brp
RP: ft

8" Screen from 175' bgs.

Logged By: Diana Smith
Test Date: 24-Sep-13
Screened Interval: 190-200 ft bgs
Reference Point Elevation: 15 ft amsl
Pump Depth: 120' ft bgs

Time	Water Level (ft brp)	Temp (°C)	Cond (µS/cm)	TDS (g/L)	Sal (ppt)	DO (mg/L)	pH	ORP (mV)	Turbitity (NTU)
			sp cond cond						
4:12p									
4:16		16.9	1416 1206	923	0.71	5.4	6.85	-45.3	5.73
4:24	start Pump	16.4	1281 1158	897 n=2	0.69	—	6.86	-45.2	5.52
4:30		16.3	1363 1136	884	0.69	3.5	6.85	-62.2	3.66
4:45		16.3	1326 1115	871	0.67	3.4	6.85	-52.9	1.80
5:15	Start Sampling	16.6	1304 1095	845	0.66		6.87	—	1.65
5:20		16.3	1296 1080	845	0.65		6.87	-50.5	0.89
	Filled Sample bottles								
5:32	Pump off								

Sampling Method:
Casing Volume:
Tubing Volume:
Volume Pumped Before Sampling:
Flow Rate:

Stabilization Criteria:
3 to 5 minute recordings with 3 consecutive readings within:
pH: +/- 0.1 unit Turb: +/- 10%
Cond: +/- 3% DO: +/- 10%
ORP: +/- 10 mV Desired Flow Rate: 100 to 500 mL/min

Form Created: 17-Aug-10

GEOSCIENCE

GEOSCIENCE Support Services, Inc.
P.O. Box 220, Claremont, CA 91711
Tel: (909) 451-6650 Fax: (909) 451-6638
www.gssiwater.com

WELL SAMPLING DATA SHEET

8" Sonic casing to 115' bgs

Client: RBF / MPWSP
Well Name/Number: PR-1 Zone 2 (125-135' bgs)
Well Dia: 4 in Well Depth: 135 ft bgs
Static WL: 4.7 ft brp
RP: +7.2

Logged By: Diane Smith
Test Date: 25-Sep-13
Screened Interval: 125-135 ft bgs
Reference Point Elevation: 16.2 ft amsl
Pump Depth: 105 ft bgs

Time	Water Level (ft brp)	Temp (°C)	Cond (µS/cm) specific Cond	TDS (g/L) mg/L	Sal (ppt)	DO (mg/L)	pH	ORP (mV)	Turbitity (NTU)
4:00	11.9								
4:07	Pump on								
4:10	–	15.5	53173 44287	34541	35.09	–	6.59	-130.1	4.20
4:18	30.8	15.6	53490 44258	34833	35.49	–	6.62	-135	3.17
4:22	31.0								
4:26	–	15.6	53625 44376	34853	35.43	–	6.64	-130.9	2.57
4:34	31.3	15.6	53053 44111	34482	35.02	–	6.65	-88.0	2.37
4:40	31.4	15.5	53449 44183	34736	35.32	–	6.66	-58.2	2.27
4:45	31.6	15.4	53620 44440	34853	35.45	–	6.66	-110.8	1.56
4:55	31.7	15.5	54148 44377	35204	35.83	–	6.65	-119.7	1.34
5:00	31.8	15.4	53824 44074	34911	35.48		6.67	-28.0	1.17
5:08	51.1	15.4	53854 44014	35002	35.60	–	6.65	-73.9	264 cloudy
5:15	56.5	15.3	53794 43988	34931	35.49	–	6.66	-62.4	75.8
5:20	–	15.2	54042 44016	35119	35.73	–	6.65	-63.5	36.7
5:25	57.3	15.2	53943 43827	35009	35.60	–	6.66	-34.1	26.4
5:30	58.0	15.3	53869 43578	34968	35.50	–	6.66	-18.0	19.9
5:35	59.1	15.3	53674 43860	34814	35.35	–	6.65	-16.8	14.7
5:40	59.3	15.3	53739 43932	34918	35.50	–	6.64	-53.3	12.3
5:45	59.7	15.3	53610 43875	34816	35.46	–	6.66	-17.4	10.2
5:50	12.8	–	–	–	–	–	–	–	–
6:00	12.8	–	–	–	–	–	–	–	–

Sampling Method:
Casing Volume:
Tubing Volume:
Volume Pumped Before Sampling:
Flow Rate:

Stabilization Criteria:
3 to 5 minute recordings with 3 consecutive readings within:
pH: +/- 0.1 unit Turb: +/- 10%
Cond: +/- 3% DO: +/- 10%
ORP: +/- 10 mV Desired Flow Rate: 100 to 500 mL/min

Form Created: 17-Aug-10

GEOSCIENCE

GEOSCIENCE Support Services, Inc.
P.O. Box 220, Claremont, CA 91711
Tel: (909) 451-6650 Fax: (909) 451-6638
www.gssiwater.com

PUMPING TEST DATA SHEET

8" sonic casing to 115' bgs

Client: RBF

Logged By: Diane Smith

Well Name: PR-1 Zone 2

Test Date: 25-Sep-13

Circle Well Type: Pumping Observation (r = ft)

Circle Test Type: Step Drawdown Constant Rate Recovery Development

Reference Point Elevation: 47.2 ft

Pump Depth: 105 ft bgs

Static Water Level Depth: 4.7 ft bgs

Totalizer Units: gal

Time of Day	Time min Step	Time min Total	Depth to Water (ft brp)	Draw-down (ft)	Pumping Rate (gpm)	Sand Content Time Interval	Sand Content ppm	Totalizer (gal)	Remarks and other data
4:00	–		11.9	–	–			03790	
4:07	0		–		–			–	Pump On
4:10	3		–		–			–	cloudy, no odor
4:18	8		30.8	18.9	30		4:19	04150 +1m	clear, foam in cup
4:23	16		31.0	19.1	30			4260	initially
4:34	27		31.3	19.4	30			4610	
4:40	33		31.4	19.5	–			4800	
4:45	38		31.6	19.7	30			4952	
4:55	48		31.7	19.8	–			5220	
5:00	53		31.8	19.9	30			5380	
5:03	56								Increase to 50 gpm
5:08	61		51.1	39.2	50			5700	cloudy
5:15	68		56.5	44.6	50			–	
5:20	73		–	–	50			6320	sl. cloudy
5:25	78		53.3	41.4	–			6560	sl. cloudy
5:30	83		58.8	46.9	–			6780	
5:35	88		59.1	47.2	50			7080	
5:40	93		59.3	47.4	50			7310	
5:45	98		59.7	47.8	50			7560	v. sl. cloudy, Pump off
5:53	8		12.8	1.2	–			–	Recovery
6:00	15		12.8	1.2	–			–	"

APPENDIX G

Groundwater Quality Laboratory Reports

(See attached CD)

GEOSCIENCE

APPENDIX G:

GROUNDWATER QUALITY

LABORATORY REPORTS

CONTENTS

Description **Page**

Borehole CX-B1

Zone 1 (274 - 284 ft bgs).....*G-1*

Zone 2 (237 - 247 ft bgs).....*G-58*

Zone 3 (182 - 192 ft bgs).....*G-113*

Zone 4 (134 - 144 ft bgs).....*G-180*

Zone 5 (84 - 94 ft bgs).....*G-248*

Zone 6 (51 - 61 ft bgs).....*G-316*

Borehole ML-1

Zone 1 (113.5 - 118.5 ft bgs).....*G-378*

Zone 2 (90 - 100 ft bgs).....*G-438*

Borehole ML-2

Zone 1 (167 - 177 ft bgs).....*G-502*

Zone 2 (90 - 100 ft bgs).....*G-563*

Borehole ML-3

Zone 1 (180 - 190 ft bgs).....*G-624*

Zone 2 (103 -113 ft bgs).....*G-656*

Borehole ML-4

Zone 1 (163.5 - 173.5 ft bgs)……G-691

Zone 2 (74.5 - 84.5 ft bgs)……G-753

Borehole ML-6

Zone 1 (152 - 162 ft bgs)……G-799

Zone 2 (100 - 110 ft bgs)……G-857

Borehole PR-1

Zone 1 (190 - 200 ft bgs)……G-915

Zone 2 (125 - 135 ft bgs)……G-976



GEOSCIENCE

GEOSCIENCE Support Services, Inc. | P (909) 451-6650 | F (909) 451-6638
620 W. Arrow Highway, Suite 2000, La Verne, CA 91750 | Mailing: P.O. Box 220, Claremont, CA 91711